NAVAL SHIPS' TECHNICAL MANUAL

CHAPTER 541

SHIP FUEL AND FUEL SYSTEMS

THIS CHAPTER SUPERSEDES CHAPTER 541 DATED 30 NOVEMBER 1992

DISTRIBUTION STATEMENT C: DISTRIBUTION AUTHORIZED TO U.S.GOVERNMENT AGENCIES AND THEIR CONTRACTORS: ADMINISTRATIVE AND OPERATIONAL USE. (MARCH 1982) OTHER REQUESTS FOR THIS DOCUMENT WILL BE REFERRED TO THE NAVAL SEA SYSTEMS COMMAND (SEA-56Z11).

WARNING: THIS DOCUMENT CONTAINS TECHNICAL DATA WHOSE EXPORT IS RESTRICTED BY THE ARMS EXPORT CONTROL ACT (TITLE 22, U.S.C.,SEC. 2751, ET SEQ.) OR EXECUTIVE ORDER 12470. VIOLATIONS OF THESE EXPORT LAWS ARE SUBJECT TO SEVERE CRIMINAL PENALTIES. DISSEMINATE IN ACCORDANCE WITH PROVISIONS OF OPNAVINST 5510.161, REFERENCE (JJ).

DESTRUCTION NOTICE: DESTROY BY ANY METHOD THAT WILL PREVENT DISCLOSURE OF CONTENTS OR RECONSTRUCTION OF THE DOCUMENT.

PUBLISHED BY DIRECTION OF COMMANDER, NAVAL SEA SYSTEMS COMMAND

11 MAR 1997

NAVSEA TECHNICAL MANUAL CERTIFICATION SHEET 1 of 1

Certification Applies to: New Manual ☐ Revision ☒ Change ☐

Applicable TMINS/Pub. No. S9086–SN–STM–010/CH–541 Revision 2

Publication Date (Mo, Da, Yr) October 7, 1996

Title: NSTM Chapter 541, Ship Fuel and Fuel Systems

TMCR/TMSR/Specification No:

CHANGES AND REVISIONS:

Purpose: Side bars in the outside margin indicate changes since the last revision. Pages 10–5 thru 10–8 specify MGO in accordance with NAVSEA purchase description as an alternate fuel to F–76 vice emergency. Pages 10–10 and 10–11 modify gravity feed tank sampling requirements. Page 10–18 adds safety requirement to Free Water Detector test procedure.

Equipment Alteration Numbers Incorporated:

TMDER/ACN Numbers Incorporated: R–45282, ACN 1/B

Continue on reverse side or add pages as needed.

CERTIFICATION STATEMENT

This is to certify that responsible NAVSEA activities have reviewed the above identified document for acquisition compliance, technical coverage, and printing quality. This form is for internal NAVSEA management use only, and does not imply contractual approval or acceptance of the technical manual by the Government, nor relieve the contractor of any responsibility for delivering the technical manual in accordance with the contract requirement.

Authority	Name	Signature	Organization	Code	Date
Acquisition	L. Nilsen	L. Nilsen	NAVSEA	03634	10/7/96
Technical	Roy Miller	Roy Miller	NAVSEA	03634	10/7/96
Printing Release	Digital Media Publishing				

TABLE OF CONTENTS

Chapter/Paragraph — Page

541 SHIP FUEL AND FUEL SYSTEMS 541-1

SECTION 1. INTRODUCTION 541-1

541-1.1 PURPOSE 541-1

541-1.2 FUELS 541-1
541-1.2.1 F-76. 541-1
541-1.2.2 JP-5. 541-1

541-1.3 F-76 FUEL SYSTEMS 541-1

541-1.4 FUEL SYSTEM OVERVIEW 541-2
541-1.4.1 FUNCTION. 541-2
541-1.4.2 SERVICE SYSTEM. 541-2
541-1.4.3 TRANSFER SYSTEM. 541-2
541-1.4.4 STRIPPING SYSTEM. 541-2

541-1.5 SAFETY 541-2
541-1.5.1 HAZARDS. 541-2
541-1.5.2 USER PREPARATION. 541-3

541-1.6 PREVENTING POLLUTION 541-3

541-1.7 SHIP STABILITY 541-3

541-1.8 FUEL QUALITY 541-4
541-1.8.1 ONBOARD FUEL CLEANING. 541-4
541-1.8.2 FUEL SAMPLING AND TESTING. 541-4

541-1.9 FUELING AT SEA 541-4

541-1.10 REFERENCES 541-4
541-1.10.1 NSTM CHAPTERS. 541-4
541-1.10.2 SHIP INFORMATION BOOK. 541-5
541-1.10.3 NAVSEA TECHNICAL MANUALS. 541-5
541-1.10.4 NAVY INSTRUCTIONS. 541-6
541-1.10.5 OTHER DOCUMENTS. 541-6

SECTION 2. SAFETY 541-6

541-2.1 F-76 AND JP-5 FLAMMABILITY CHARACTERISTICS 541-6
541-2.1.1 INTRODUCTION. 541-6
541-2.1.2 FLASHPOINT. 541-6
541-2.1.3 AUTOIGNITION TEMPERATURE. 541-7
541-2.1.4 WICKING. 541-7

TABLE OF CONTENTS - Continued

Chapter/Paragraph Page

541-2.1.5 MIST FORMATION. 541-7

541-2.2 HOW SHIPBOARD FUEL FIRES START 541-7
541-2.2.1 FUEL LEAKS. 541-7
541-2.2.2 FUEL SPRAY. 541-7
541-2.2.3 FUEL ACCUMULATION. 541-7

541-2.3 HOW TO PREVENT SHIPBOARD FUEL FIRES 541-8
541-2.3.1 SEPARATION. 541-8
541-2.3.2 GOOD MAINTENANCE. 541-8

541-2.4 SAFETY ACTIONS 541-8
541-2.4.1 GENERAL. 541-8
541-2.4.2 AVOID CONTACT WITH FUEL. 541-8
541-2.4.3 PREVENT LEAKS 541-8
541-2.4.4 PREVENT FUEL ACCUMULATION. 541-9
541-2.4.4.1 Boiler Inspection. 541-9
541-2.4.4.2 Gas Turbine and Diesel Engine Inspection. 541-9
541-2.4.4.3 Bilge Inspection. 541-9
541-2.4.4.4 Lighting-Off Torch Pot. 541-10
541-2.4.4.5 Drip Pans. 541-10
541-2.4.4.6 Deckplates. 541-10
541-2.4.5 PROPERLY DISPOSE OF FUEL-CONTAMINATED WASTE. 541-10
541-2.4.6 DETECT FUEL VAPORS. 541-10
541-2.4.7 OBSERVE TANK ENTRY PRECAUTIONS. 541-10
541-2.4.8 AVOID IGNITION SOURCES. 541-11
541-2.4.9 KEEP FUEL SYSTEM SAFETY FEATURES IN GOOD REPAIR. 541-11

SECTION 3. FUEL STORAGE SYSTEMS 541-12

541-3.1 INTRODUCTION 541-12

541-3.2 GENERAL INFORMATION 541-12
541-3.2.1 RELATION BETWEEN FUEL STORAGE AND SEAWATER BALLASTING. 541-12
541-3.2.2 SERVICE TANKS. 541-13
541-3.2.3 RATED TANK CAPACITY. 541-13
541-3.2.4 TRANSFER SYSTEM. 541-13

541-3.3 SEPARATE FUEL TANKS AND BALLAST TANKS 541-13
541-3.3.1 DESCRIPTION. 541-13
541-3.3.2 MODIFIED CLEAN BALLAST SYSTEM. 541-13

541-3.4 FUEL OR BALLAST TANKS 541-13
541-3.4.1 DESCRIPTION. 541-13
541-3.4.2 AVOID MIXING FUEL AND SEAWATER. 541-13
541-3.4.3 HARBOR WATER. 541-13

TABLE OF CONTENTS - Continued

Chapter/Paragraph Page

541-3.4.4 TANK PIPELINE SAMPLE CONNECTIONS. 541-13

541-3.5 COMPENSATED FUEL STORAGE TANKS 541-14
541-3.5.1 DESCRIPTION. 541-14
541-3.5.1.1 Tank Banks. 541-16
541-3.5.1.2 Stripping Tank. 541-16
541-3.5.2 FUNCTIONAL DESCRIPTION. 541-16
541-3.5.2.1 Filling a Tank Bank. 541-16
541-3.5.2.2 Transferring Fuel. 541-16
541-3.5.3 HARBOR WATER. 541-16
541-3.5.4 PREVENT POLLUTION. 541-16
541-3.5.4.1 Inport Refueling Valves. 541-17
541-3.5.4.2 Fueling Rate. 541-17
541-3.5.4.3 Local Inport Fueling Requirements. 541-17
541-3.5.5 DEBALLASTING COMPENSATED TANKS. 541-17
541-3.5.5.1 Preliminary Actions. 541-17
541-3.5.5.2 Air Pressure. 541-18
541-3.5.5.3 Draining. 541-18

SECTION 4. FUEL TRANSFER SYSTEMS 541-18

541-4.1 INTRODUCTION 541-18

541-4.2 GENERAL INFORMATION 541-18
541-4.2.1 AVOIDING OVERBOARD OVERFLOW. 541-18
541-4.2.2 SEPARATE TRANSFER AND PURIFIER PUMPS. 541-19
541-4.2.3 STRIPPING. 541-19

541-4.3 FILLING 541-19
541-4.3.1 GENERAL INFORMATION 541-19
541-4.3.1.1 Flow Rate. 541-19
541-4.3.1.2 Pressure. 541-19
541-4.3.2 OPERATION. 541-19
541-4.3.2.1 Prepare the Tanks for Filling. 541-19
541-4.3.2.2 Determine the Order of Filling. 541-20
541-4.3.2.3 Seawater-Compensated Tank Banks. 541-20
541-4.3.2.4 Fill the Tanks. 541-20
541-4.3.2.5 Monitor Tank Level. 541-20

541-4.4 TRANSFERRING BETWEEN STORAGE TANKS 541-20
541-4.4.1 REASONS FOR TRANSFERRING. 541-20
541-4.4.2 OPERATION. 541-21
541-4.4.2.1 Sample and Strip the Tanks. 541-21
541-4.4.2.2 Gravity Flow. 541-21
541-4.4.2.3 Pumping. 541-21

541-4.5 TRANSFERRING FROM STORAGE TANKS TO SERVICE TANKS 541-21

TABLE OF CONTENTS - Continued

Chapter/Paragraph Page

541-4.5.1 GENERAL INFORMATION 541-21
541-4.5.1.1 Types of Filtration. 541-21
541-4.5.1.2 Heaters. 541-21
541-4.5.1.3 Filling Service Tanks. 541-21
541-4.5.2 OPERATION. 541-22
541-4.5.2.1 System Preoperational Integrity Test. 541-22
541-4.5.2.2 Ships with Strainers. 541-22
541-4.5.2.3 Ships with Filter/ Separators. 541-23
541-4.5.2.4 Ships with Centrifugal Purifiers. 541-23

541-4.6 FUELING OTHER SHIPS OR DEFUELING TANKS 541-24
541-4.6.1 REMOVING FUEL FROM STORAGE TANKS. 541-24
541-4.6.2 REMOVING FUEL FROM SERVICE TANKS. 541-25

541-4.7 INTERFACES 541-25
541-4.7.1 SERVICE SYSTEM. 541-25
541-4.7.2 STRIPPING SYSTEM. 541-25
541-4.7.3 OILY WATER DRAIN COLLECTING SYSTEM. 541-25

SECTION 5. FUEL SERVICE SYSTEMS 541-25

541-5.1 INTRODUCTION 541-25

541-5.2 GENERAL INFORMATION 541-25
541-5.2.1 FUEL RETURN. 541-25
541-5.2.2 USE OF FUEL SERVICE TANKS. 541-26
541-5.2.3 FLOWMETERS. 541-26
541-5.2.4 EMERGENCY SHUTDOWNS. 541-26
541-5.2.4.1 Service Tank Suction Emergency Cutout Valves. 541-26
541-5.2.4.2 Boiler Front Quick-Closing Valves. 541-27
541-5.2.4.3 Gas Turbine Emergency Fuel Trip Valves. 541-27
541-5.2.4.4 Service Pump Steam Line Quick-Closing Valves and Remote Shutdown Pushbuttons. 541-27

541-5.3 STEAM SHIP SERVICE SYSTEMS 541-28
541-5.3.1 GENERAL INFORMATION 541-28
541-5.3.1.1 Service Pumps. 541-28
541-5.3.1.2 Strainers. 541-28
541-5.3.1.3 System Pressure. 541-28
541-5.3.2 OPERATION. 541-28
541-5.3.2.1 System Startup. 541-28
541-5.3.2.2 Continuing Operation. 541-29
541-5.3.2.3 Securing the System. 541-29

541-5.4 DIESEL SHIP SERVICE SYSTEMS 541-30
541-5.4.1 GENERAL INFORMATION 541-30
541-5.4.1.1 Engine-Mounted Pump and Filter. 541-30

TABLE OF CONTENTS - Continued

Chapter/Paragraph Page

541-5.4.1.2 Service System Piping Components. 541-30
541-5.4.1.3 System Pressure. 541-30
541-5.4.1.4 Fuel Returns. 541-30
541-5.4.2 OPERATION. 541-30
541-5.4.2.1 System Startup. 541-31
541-5.4.2.2 Continuing Operation. 541-31
541-5.4.2.3 Securing the System. 541-31

541-5.5 GAS TURBINE SHIP SERVICE SYSTEMS 541-31
541-5.5.1 GENERAL INFORMATION 541-31
541-5.5.1.1 Service Pumps. 541-31
541-5.5.1.2 Heaters. 541-31
541-5.5.1.3 Filtration. 541-31
541-5.5.1.4 System Pressure. 541-32
541-5.5.2 OPERATION. 541-32
541-5.5.2.1 System Startup. 541-32
541-5.5.2.2 Continuing Operation. 541-33
541-5.5.2.3 Securing the System. 541-33

541-5.6 LANDING CRAFT AIR CUSHION (LCAC) SERVICE SYSTEMS 541-33
541-5.6.1 GENERAL INFORMATION. 541-33
541-5.6.2 OPERATION. 541-34

541-5.7 INTERFACES 541-34
541-5.7.1 TRANSFER SYSTEM. 541-34
541-5.7.2 AVIATION JP-5 TRANSFER SYSTEM. 541-34
541-5.7.3 STRIPPING SYSTEM. 541-34
541-5.7.4 OILY WATER DRAIN COLLECTING SYSTEM. 541-34

SECTION 6. FUEL STRIPPING SYSTEMS 541-35

541-6.1 INTRODUCTION 541-35

541-6.2 GENERAL INFORMATION 541-35
541-6.2.1 TAILPIPES. 541-35
541-6.2.2 CONTAMINATED OIL SETTLING TANK. 541-35
541-6.2.3 COMPENSATED TANKS. 541-36
541-6.2.4 INTEGRATION WITH OTHER SYSTEMS 541-36
541-6.2.4.1 Stripping with Transfer System. 541-36
541-6.2.4.2 Service Tank Recirculation. 541-36
541-6.2.4.3 Bilge Stripping. 541-36
541-6.2.4.4 Ballasting and Deballasting. 541-36

541-6.3 OPERATION 541-36

541-6.4 INTERFACES 541-36
541-6.4.1 SERVICE SYSTEM. 541-36

TABLE OF CONTENTS - Continued

Chapter/Paragraph Page

541-6.4.2 TRANSFER SYSTEM. 541-36
541-6.4.3 OILY WATER DRAIN COLLECTING SYSTEM. 541-36

SECTION 7. CARGO OIL SYSTEMS 541-37

541-7.1 INTRODUCTION 541-37
541-7.1.1 FLEET OILER. 541-37
541-7.1.2 FOSS PROCEDURES. 541-37
541-7.1.3 CARGO OIL SYSTEM. 541-37
541-7.1.4 CARGO OIL STRIPPING SYSTEM. 541-37
541-7.1.5 CONTAMINATED CARGO OIL RECLAMATION SYSTEM. 541-38

541-7.2 SAFETY 541-38

541-7.3 GENERAL INFORMATION 541-38
541-7.3.1 CARGO OIL SYSTEM FLEXIBILITY. 541-38
541-7.3.1.1 Transfer Between Cargo Oil Tanks. 541-38
541-7.3.1.2 Discharge Fuel to Two Ships Simultaneously. 541-38
541-7.3.2 CARGO OIL SYSTEM FLOW RATES. 541-38
541-7.3.3 CARGO OIL SYSTEM PRESSURE REGULATION. 541-39
541-7.3.4 PRIMING CARGO OIL PUMPS. 541-39
541-7.3.5 CARGO OIL STRIPPING TAILPIPES. 541-39
541-7.3.6 BALLASTING AND DEBALLASTING CARGO OIL TANKS. 541-39

541-7.4 FUEL QUALITY 541-39
541-7.4.1 CARGO FUEL CONTAMINATION. 541-39
541-7.4.1.1 Investigate Suspected Contamination. 541-39
541-7.4.1.2 Procedure for Reporting Contamination. 541-40
541-7.4.2 FUEL QUALITY TESTS. 541-40

541-7.5 OPERATION 541-41

541-7.6 INTERFACES 541-41
541-7.6.1 FUEL TRANSFER SYSTEM. 541-41
541-7.6.2 CARGO JP-5 SYSTEM. 541-41

SECTION 8. FUEL SYSTEM MAINTENANCE 541-41

541-8.1 MAINTENANCE AND SAFETY 541-41

541-8.2 PREVENTIVE MAINTENANCE 541-42
541-8.2.1 PLANNED MAINTENANCE SYSTEM. 541-42
541-8.2.2 OTHER SOURCES OF PREVENTIVE MAINTENANCE ACTIONS. . . . 541-42
541-8.2.3 ENGINEERING OPERATIONAL SEQUENCING SYSTEM. 541-42
541-8.2.4 PERIODIC PRESSURE TESTS. 541-42

541-8.3 CORRECTIVE MAINTENANCE 541-42

TABLE OF CONTENTS - Continued

Chapter/Paragraph Page

541-8.3.1 SOURCES OF INFORMATION. 541-42
541-8.3.2 ON-THE-JOB TRAINING. 541-43
541-8.3.3 ISOLATION FOR MAINTENANCE. 541-43

541-8.4 ACTIONS REQUIRED AFTER MAINTENANCE 541-43
541-8.4.1 HYDROSTATIC TEST. 541-43
541-8.4.2 OPERATIONAL PRESSURE TEST. 541-43
541-8.4.3 SYSTEM FLUSHING. 541-44
541-8.4.3.1 Transfer System Flushing 541-44
541-8.4.3.2 Service System Flushing 541-44
541-8.4.3.3 Stripping System Flushing. 541-45

SECTION 9. FUEL SYSTEM COMPONENTS 541-45

541-9.1 INTRODUCTION 541-45

541-9.2 TANKS 541-46
541-9.2.1 TAILPIPES. 541-46
541-9.2.2 TANK COATINGS. 541-46
541-9.2.3 TANK INSPECTION AND CLEANING. 541-46

541-9.3 TANK OVERFLOWS 541-46
541-9.3.1 DESCRIPTION. 541-46
541-9.3.2 MAINTENANCE. 541-46

541-9.4 TANK VENTS 541-47
541-9.4.1 DESCRIPTION. 541-47
541-9.4.2 MAINTENANCE. 541-47

541-9.5 TANK SOUNDING TUBES 541-47
541-9.5.1 DESCRIPTION. 541-47
541-9.5.2 SOUNDING TUBE CLOSURE 541-47
541-9.5.3 FLOATING-BALL CHECK VALVES. 541-48
541-9.5.3.1 Description. 541-48
541-9.5.3.2 Installation Requirements. 541-49
541-9.5.4 OPERATION 541-50
541-9.5.4.1 Determining Tank Fuel Level. 541-50
541-9.5.4.2 Sampling. 541-50

541-9.6 TANK LEVEL-INDICATING SYSTEMS 541-50
541-9.6.1 DESCRIPTION. 541-50
541-9.6.2 GENERAL INFORMATION 541-51
541-9.6.2.1 High-Level Alarms. 541-51
541-9.6.2.2 Low-Level Alarms. 541-51
541-9.6.2.3 Magnetic Level-Indicating Systems in Compensated Tanks. . . . 541-51
541-9.6.2.4 Magnetic Level-Indicating Systems in Contaminated Oil Settling Tanks. 541-51

TABLE OF CONTENTS - Continued

Chapter/Paragraph Page

541-9.6.2.5 Epoxy Coatings. 541-51

541-9.7 TANK SIGHT GLASSES 541-51
541-9.7.1 GENERAL. 541-51
541-9.7.2 DIRECT-READING SIGHT GLASSES 541-52
541-9.7.3 INDIRECT-READING SIGHT GLASSES. 541-52
541-9.7.4 CLEAVAGE INDICATING SYSTEM. 541-52

541-9.8 TANK ACCESS COVERS 541-52
541-9.8.1 GENERAL. 541-52
541-9.8.2 GASKETS. 541-52
541-9.8.3 SEALING SURFACES. 541-52
541-9.8.4 TIGHTENING COVER FASTENERS. 541-52
541-9.8.5 CHECKING GASKET COMPRESSION. 541-52
541-9.8.6 CHECKING FOR LEAKS. 541-53
541-9.8.7 STOPPING LEAKS. 541-53

541-9.9 PIPING 541-53
541-9.9.1 GENERAL. 541-53
541-9.9.2 PIPING CORROSION AND FIRE HAZARDS. 541-53
541-9.9.3 FLANGE SPRAY SHIELDS. 541-53
541-9.9.4 MAINTENANCE 541-54
541-9.9.4.1 Preventing Corrosion in Steel Piping Systems. 541-54
541-9.9.4.2 Copper-Nickel and Stainless Steel Fuel Piping. 541-54
541-9.9.4.3 Extent of Piping Replacement During Repairs. 541-54
541-9.9.4.4 Maintaining Records. 541-55

541-9.10 VALVES 541-55
541-9.10.1 GENERAL. 541-55
541-9.10.2 LEAK-BY. 541-55
541-9.10.3 USE OF HIGH-PERFORMANCE BUTTERFLY VALVES. 541-55
541-9.10.4 QUICK-CLOSING VALVE ACTUATING CABLE SLACK. 541-55

541-9.11 PUMPS 541-56
541-9.11.1 OVERVIEW. 541-56
541-9.11.2 GENERAL INFORMATION 541-56
541-9.11.2.1 Positive Displacement Pump Characteristics. 541-56
541-9.11.2.2 Pump Relief Valves. 541-56
541-9.11.3 OPERATION 541-57
541-9.11.3.1 Practical Limitations on Throttling. 541-57
541-9.11.3.2 Losing Suction. 541-57

541-9.12 STRAINERS 541-57
541-9.12.1 GENERAL. 541-57
541-9.12.2 APPLICATION. 541-57
541-9.12.2.1 Transfer Systems. 541-57
541-9.12.2.2 Service Systems. 541-57

TABLE OF CONTENTS - Continued

Chapter/Paragraph Page

541-9.12.2.3 Inline and Cone-Type Strainers. 541-58
541-9.12.3 DESCRIPTION. 541-58
541-9.12.3.1 Metal-Edge Strainers. 541-58
541-9.12.3.2 Simplex and Duplex. 541-58
541-9.12.3.3 Firesafe Fuel Oil Strainer. 541-58
541-9.12.4 OPERATION. 541-60
541-9.12.4.1 Transfer System Strainer. 541-60
541-9.12.4.2 Service System Strainer. 541-60
541-9.12.4.3 Pressure Drop Fails to Increase. 541-61
541-9.12.5 MAINTENANCE. 541-61
541-9.12.5.1 Preparation for Disassembly 541-61
541-9.12.5.2 Cleaning the Baskets. 541-61
541-9.12.5.3 Returning to Service. 541-62

541-9.13 FILTER/SEPARATORS 541-62
541-9.13.1 APPLICATION. 541-62
541-9.13.2 DESCRIPTION. 541-62
541-9.13.2.1 Functional Description. 541-62
541-9.13.2.2 Class 1/Class 2. 541-62
541-9.13.2.3 Simplex. 541-62
541-9.13.2.4 Duplex. 541-62
541-9.13.2.5 Construction. 541-63
541-9.13.3 OPERATION. 541-63
541-9.13.4 MAINTENANCE 541-64
541-9.13.4.1 Maintenance Intervals. 541-64
541-9.13.4.2 Coalescer Element Inspection and Replacement 541-65
541-9.13.4.3 Separator Element Replacement and Test. 541-66
541-9.13.4.4 Returning to Service 541-67
541-9.13.4.5 Ordering Filter/Separator Elements. 541-67
541-9.13.4.6 Troubleshooting. 541-68

541-9.14 PREFILTERS 541-68
541-9.14.1 APPLICATION. 541-68
541-9.14.2 DESCRIPTION. 541-68
541-9.14.2.1 Elements. 541-69
541-9.14.2.2 Simplex/Duplex. 541-69
541-9.14.2.3 Construction. 541-69
541-9.14.3 OPERATION. 541-69
541-9.14.4 MAINTENANCE. 541-69
541-9.14.4.1 Opening the Compartment. 541-69
541-9.14.4.2 Element Inspection and Replacement 541-69
541-9.14.4.3 Returning to Service 541-70
541-9.14.4.4 Ordering Prefilter Elements. 541-70

541-9.15 CENTRIFUGAL PURIFIERS 541-71
541-9.15.1 APPLICATION. 541-71
541-9.15.2 DESCRIPTION. 541-71

TABLE OF CONTENTS - Continued

Chapter/Paragraph Page

541-9.15.2.1 Physical Description. 541-71
541-9.15.2.2 Functional Description. 541-73
541-9.15.3 PRIMING-WATER SEAL. 541-74
541-9.15.4 PURIFICATION OF FUEL. 541-74
541-9.15.4.1 Phase Separation. 541-74
541-9.15.4.2 Fuel/Water Interface. 541-74
541-9.15.4.3 Gravity Ring. 541-74
541-9.15.4.4 Solid Contaminant Removal. 541-74
541-9.15.4.5 Water Removal. 541-75
541-9.15.5 PURIFIER CLEANING (REMOVAL OF SLUDGE). 541-75
541-9.15.5.1 Self-Cleaning. 541-75
541-9.15.5.2 Self-Cleaning Shoot Cycle. 541-75
541-9.15.6 DENSITY OF CONTAMINANTS. 541-75
541-9.15.7 OPERATION. 541-75
541-9.15.7.1 Precautions 541-75
541-9.15.7.2 Placing the Purifier in Standby. 541-76
541-9.15.8 MAINTENANCE 541-76
541-9.15.8.1 Precautions 541-76
541-9.15.8.2 Troubleshooting. 541-77

SECTION 10. PETROLEUM FUELS: PRODUCTION, SAMPLING, AND TESTING 541-78

541-10.1 INTRODUCTION 541-78
541-10.1.1 BACKGROUND. 541-78

541-10.2 PETROLEUM FUEL PRODUCTION 541-78
541-10.2.1 REFINING OF CRUDE OIL. 541-78
541-10.2.2 DISTILLATE FUELS. 541-78
541-10.2.2.1 Jet Fuels. 541-78
541-10.2.2.2 Diesel Fuels. 541-78

541-10.3 FUEL PROPERTIES 541-79
541-10.3.1 GENERAL. 541-79
541-10.3.2 API/SPECIFIC GRAVITY. 541-79
541-10.3.3 CALORIFIC OR HEATING VALUE. 541-79
541-10.3.4 VISCOSITY. 541-80
541-10.3.5 CLOUD POINT/POUR POINT. 541-81
541-10.3.6 FLASHPOINT. 541-81
541-10.3.7 CETANE NUMBER. 541-82
541-10.3.8 CETANE INDEX. 541-82
541-10.3.9 SULFUR CONTENT. 541-82
541-10.3.10 ASH CONTENT. 541-82
541-10.3.11 COLOR. 541-82
541-10.3.12 APPEARANCE. 541-82
541-10.3.13 COMPARISON OF PROPERTIES. 541-82

541-10.4 SHIPBOARD FUEL PREFERENCE 541-83

TABLE OF CONTENTS - Continued

Chapter/Paragraph Page

541-10.4.1 ORDER OF FUEL PREFERENCE. 541-83
541-10.4.2 PRIMARY FUEL. 541-84
541-10.4.3 ACCEPTABLE SUBSTITUTE FUELS. 541-84
541-10.4.4 EMERGENCY SUBSTITUTE FUELS. 541-85

541-10.5 FUEL QUALITY ASSURANCE 541-87
541-10.5.1 INTRODUCTION. 541-87
541-10.5.2 DLA CONTRACT QUALITY CONTROL PROGRAM. 541-87
541-10.5.3 COMMERCIAL SUPPLIER NOT UNDER GOVERNMENT CONTRACT QUALITY ASSURANCE. 541-88
541-10.5.4 ORDER OF PREFERENCE FOR DETERMINING FUEL SOURCE. 541-88

541-10.6 RECEIPT OF FUEL (F-76) 541-88
541-10.6.1 RECEIPT FROM NAVY-OWNED STOCKS. 541-88
541-10.6.2 RECEIPT FROM DLA STOCKS. 541-88
541-10.6.3 RECEIPT FROM NATO SOURCES. 541-89
541-10.6.4 RECEIPT FROM A COMMERCIAL SUPPLIER UNDER GOVERNMENT CONTRACT AND CONTRACT BULLETIN. 541-89
541-10.6.5 RECEIPT FROM A COMMERCIAL SUPPLIER NOT UNDER GOVERNMENT CONTRACT (LOCAL PURCHASE). 541-89

541-10.7 SHIPBOARD SAMPLING AND TESTING PROCEDURES. 541-90
541-10.7.1 TYPES OF FUEL SAMPLING. 541-90
541-10.7.2 SAMPLING DURING FUEL (F-76) RECEIPT. 541-90
541-10.7.3 SAMPLING EQUIPMENT. 541-91
541-10.7.3.1 Fuel Thief. 541-91
541-10.7.3.2 Water-Indicating Paste. 541-93
541-10.7.3.3 Seawater Test Strips. 541-93

541-10.8 SAMPLING, TESTING, AND STRIPPING OF SHIP FUEL TANKS 541-94
541-10.8.1 GENERAL. 541-94
541-10.8.2 TEST CRITERIA FOR SHIP FUEL (F-76) TANKS. 541-94
541-10.8.3 FUEL STORAGE TANK TESTING. 541-94
541-10.8.4 FUEL SERVICE TANK TESTING. 541-95
541-10.8.4.1 Steam Boilers and Diesel Engines. 541-95
541-10.8.4.2 Gas Turbine Engines. 541-95
541-10.8.5 FUEL TANK STRIPPING PROCEDURES. 541-95
541-10.8.6 GAS TURBINE SERVICE TANK RECIRCULATION. 541-95

541-10.9 SHIPBOARD FUEL TESTING 541-96
541-10.9.1 PURPOSES OF TESTING. 541-96
541-10.9.2 SHIPBOARD TESTS. 541-96
541-10.9.2.1 Clear and Bright Test Procedure. 541-96
541-10.9.2.2 Bottom Sediment and Water (BS & W Test Procedure). 541-96
541-10.9.2.3 Free Water Detector (FWD) Test Procedure. 541-97
541-10.9.2.4 Contaminated Fuel Detector (CFD) Test Procedure. 541-98
541-10.9.2.5 Combined Contaminated Fuel Detector (CCFD). 541-99

TABLE OF CONTENTS - Continued

Chapter/Paragraph Page

541-10.9.2.6 Flashpoint Test Procedure. 541-100
541-10.9.2.7 API/Specific Gravitye.

LIST OF TABLES

Table	Title	Page
541-9-1	ORDERING FUEL SYSTEM FILTER/SEPARATOR ELEMENTS	541-67
541-10-1	COMPARISON OF FUEL SPECIFICATION REQUIREMENTS[1]	541-82
541-10-2	SHIPBOARD SAMPLING AND TESTING REQUIREMENTS FOR F-76 FUEL[1]	541-86
541-10-3	SAMPLING EQUIPMENT	541-91
541-10-4	OBSERVED API GRAVITY TO API GRAVITY AT 60°F (15.6°C)	541-104
541-10-5	API GRAVITY TO SPECIFIC GRAVITY	541-107
541-10-6	VOLUME CORRECTION TO 60°F (15.6°C)	541-112

LIST OF ILLUSTRATIONS

Figure	Title	Page
541-3-1	Typical Seawater-Compensated Fuel Storage Tank Bank	541-15
541-9-1	Floating-Ball Check Valve (Sectional View)	541-49
541-9-2	Firesafe Fuel Oil Strainer (FSFOS)	541-59
541-9-3	Filter/Separator Flow Schematic	541-64
541-9-4	Purifier Cross-Section	541-72
541-9-5	Flow and Operation of Purifier (Self-Cleaning)	541-73
541-10-1	F-76 and JP-5 Viscosity - Temperature Curves	541-81
541-10-2	Shipboard Fuel Selection Guide	541-84
541-10-3	Fuel Thief Sampler	541-92

CHAPTER 541

SHIP FUEL AND FUEL SYSTEMS

SECTION 1.
INTRODUCTION

541-1.1 PURPOSE

541-1.1.1 This Naval Ships' Technical Manual (NSTM) chapter covers the fuel and fuel systems for ship propulsion and specified auxiliary equipment. It provides technical information for those who operate or maintain ship fuel systems. This chapter also includes safety precautions, descriptions of systems and fuel, and guidance on operation and maintenance. Detailed procedures for operation and maintenance are available in the documentation specific to each ship's fuel systems, which takes precedence over instructions in this chapter. System design information is included only where it helps personnel understand operation or maintenance.

541-1.2 FUELS

541-1.2.1 F-76. The Navy has standardized on one preferred fuel for all shipboard power plants (diesel engines, gas turbines, and boilers). This fuel is North Atlantic Treaty Organization (NATO) Code Number F-76 (called F-76 in this chapter). It is described by MIL-F-16884, Fuel, Naval Distillate. It was formerly known as Diesel Fuel, Marine (DFM). F-76 is described in detail in Section 10, which also discusses alternative fuels.

541-1.2.2 JP-5. JP-5 is a jet fuel (NATO code F-44) covered by MIL-T-5624, Turbine Fuel, Aviation, Grades JP-4, JP-5, and JP-5/JP-8 ST. JP-5 is the only jet fuel authorized to be carried by fleet oilers and used aboard Navy ships. JP-5 is used primarily for fueling aircraft on Navy ships, and is an acceptable fuel substitute for F-76 in diesels, gas turbines, and boilers. It is also used for small boat filling stations or combat vehicle/support equipment filling stations. Because they are located in auxiliary spaces with the JP-5 aviation fuel systems, many ship service emergency diesels and auxiliary boilers are fueled with JP-5 rather than F-76. Refer to NSTM Chapter 542, Gasoline and JP-5 Fuel Systems , for guidance on JP-5 fuel and JP-5 fuel systems.

541-1.3 F-76 FUEL SYSTEMS

541-1.3.1 This NSTM chapter discusses F-76 fuel, fuel testing, safety precautions, and fuel system operation and maintenance on all fossil-fueled surface ships of the U.S. Navy. It does not cover fuel systems on small boats, landing craft, or submarines. The fuel systems covered include the following:

a. Ship fuel filling and transfer systems (including fuel storage on the ship).

b. Ship fuel service systems.

c. Landing craft air cushion (LCAC) service systems (shipboard systems that provide fuel to the LCAC, not systems on the LCAC itself).

d. Ship fuel stripping systems.

e. Cargo oil systems (systems that carry fuel for ship propulsion).

f. Cargo oil stripping systems.

541-1.4 FUEL SYSTEM OVERVIEW

541-1.4.1 FUNCTION. The fuel system handles ship fuel from the time it is loaded onto the ship until it is consumed by propulsion and auxiliary equipment. Its functions include storing fuel, cleaning fuel, and directing fuel to all end users on the ship. Although shipboard fuel systems are often considered separately as the transfer system, service system, and stripping system, these systems all work together as the overall ship fuel system.

541-1.4.2 SERVICE SYSTEM. The fuel service system provides fuel to propulsion equipment such as boilers, diesel engines, and gas turbines, as well as to auxiliary equipment such as auxiliary boilers, ship service diesel generators, gas turbine generators, and incinerators.

541-1.4.2.1 One fuel service system may supply various end users, or there may be separate service systems for different end users. Ships with more than one main propulsion space usually have a separate fuel service system in each main propulsion space. A fuel service system operates continuously as long as any equipment it supplies is operating.

541-1.4.2.2 A fuel service pump draws fuel from a fuel service tank and delivers it through a strainer or filter to end users. Usually at least two service pumps and two service tanks serve each propulsion service system. Only one service tank is used at a time. The service tank that is not in use is filled by the fuel transfer system.

541-1.4.3 TRANSFER SYSTEM. A fuel transfer pump takes suction from any storage tank or contaminated oil settling tank (COST) and delivers fuel, usually through a strainer or purifier, to a service tank. Fuel is transferred intermittently whenever service tanks require refilling.

541-1.4.3.1 The ship can be fueled either in port or at sea. Fuel is pumped from a shore facility or tanker to one or more of the fuel system deck connections. Fill piping and manifolds direct the fuel from the deck connections to the fuel storage tanks.

541-1.4.3.2 Some ships can also deliver fuel from their storage tanks to other ships. A transfer pump takes suction on any storage tank and discharges fuel to the fuel system deck connections.

541-1.4.4 STRIPPING SYSTEM. Water and sediment gradually accumulate at the bottom of service tanks and uncompensated storage tanks. When necessary, a stripping pump draws contaminated liquid from the tank bottoms and delivers it to a COST. The fuel stripping system is aligned to draw liquid from particular tanks as required. Usable fuel that rises to the top of the COST can be drawn off by a transfer pump. Stripping system configurations vary considerably. Gas turbine ships with seawater-compensated storage tanks have no separate stripping systems, but there are other ways to remove water and solid contaminants from these tanks, such as service tank recirculation.

541-1.5 SAFETY

541-1.5.1 HAZARDS. Fuel is dangerous. The most significant hazards of fuel are:

a. Flammability - Once fuel is ignited, it burns ferociously. Fuel fires have killed people, destroyed spaces, and caused the decommissioning of ships.

b. Toxicity - Any contact with fuel is hazardous. The most serious threat is from fuel vapors in confined spaces, which can quickly cause unconsciousness and result in death. Prolonged skin contact may result in inflammation or illness.

c. Pressure - As with any pressurized fluid, if components fail, leaking fuel under pressure can cause severe injury or be ignited by nearby or relatively-remote ignition sources.

541-1.5.2 USER PREPARATION. Fuel system safety is covered in Section 2. Read and be familiar with Section 2 before operating or maintaining any ship fuel system.

541-1.6 PREVENTING POLLUTION

541-1.6.1 The primary reference for detailed guidance on fuel and oil pollution control requirements and overboard discharge restrictions is OPNAVINST 5090.1A, Environmental and Natural Resources Program . Refer also to requirements cited in the 1978 Protocol to the International Convention for the Prevention of Pollution from Ships (MARPOL); DOD Directive 6050.15, Prevention of Oil Pollution from Ships Owned or Operated by the Department of Defense; and **NSTM Chapter 593, Pollution Control** .

541-1.6.2 Fuel is a pollutant and cannot be simply discharged overboard. Numerous laws and regulations control the discharge of oily waste and fuel. Discharge restrictions currently depend on how near the ship is to land, whether the ship has an oil-water separator or an oil content monitor, and agreements between and among the United States and foreign countries.

541-1.6.3 Fuel system operations that could result in the overboard discharge of oily wastes or fuel include fueling, transferring, stripping, and deballasting storage tanks. Particular precautions are included in sections of this NSTM chapter covering these operations. Extra care shall be taken when refueling or operating in port or in coastal waters.

541-1.7 SHIP STABILITY

541-1.7.1 A ship’s fuel is a significant portion of its total weight. Improper handling of fuel can jeopardize the ship’s stability and can affect operating fuel economy when stowage distribution causes drag in excess of intended trim. Enhance stability and trim by:

a. Keeping fuel properly distributed among storage tanks, as directed by the ship’s liquid loading document.

b. Minimizing the number of partially full uncompensated tanks, to reduce free surface.

c. Ballasting storage tanks when necessary.

541-1.7.2 Fuel system operations that affect stability include fueling, transferring, ballasting, and deballasting. Particular precautions are included in sections of this NSTM chapter covering these operations.

541-1.7.3 Although fuel system personnel should understand ship stability concerns, responsibility for ship stability rests with the Damage Control Officer. Fuel movements must be coordinated with the Damage Control Officer or the Chief Engineer.

541-1.8 FUEL QUALITY

541-1.8.1 ONBOARD FUEL CLEANING. Fuel received on ship may contain more free water or solid contaminants than allowed for use in shipboard equipment. Onboard provisions for cleaning fuel include:

a. Storage tank stripping. Water and solid contaminants settle to the bottom of noncompensated storage tanks, where they can be removed by the stripping system. This type of storage tank stripping is not possible in seawater-compensated tanks.

b. Transfer system filtration. Fuel is usually passed through a filtration device when it is transferred to a service tank, typically a strainer on steam ships or a centrifugal purifier on diesel and gas turbine ships. Strainers remove solid contaminants; centrifugal purifiers remove free water and solid contaminants.

c. Service tank stripping. Water and solid contaminants settle to the bottom of service tanks, where they can be removed by the stripping system.

d. Service tank recirculation. On gas turbine ships, fuel is recirculated from the standby service tank, through the transfer system purifier, and back to the standby service tank. Each pass through the purifier removes more water and solids.

e. Service system filtration. Fuel passes through a filtration device when it is pumped from the service tank to the propulsion equipment. Steam ships typically use a strainer; diesel ships use a filter attached to the engine; and gas turbine ships use a filter/separator. Filter/separators remove free water as well as fine particles. Many gas turbine ships also have a prefilter upstream of the filter/separator. The prefitter extends the operating life of the filter/separator elements.

541-1.8.2 FUEL SAMPLING AND TESTING. Fuel is sampled at various points throughout the fuel system to verify that it is being cleaned properly and to determine when stripping is required. Required fuel sampling and testing is covered in Section 10.

541-1.9 FUELING AT SEA

541-1.9.1 The term fueling at sea refers to transferring fuel from one underway ship to another underway ship. Fueling-at-sea operations are covered in NAVSEA manual 0411-LP-505-1402, Replenishment at Sea (NWP-14). The hardware used in fueling-at-sea systems is detailed in NAVSEA S9570-AD-CAT-010, Underway Replenishment Hardware and Equipment Manual. Additional guidance on operations and hardware is available from the various fueling handbooks and manuals listed in paragraph 541-1.10.3 and paragraph 541-1.10.4.

541-1.9.2 Fuel quality requirements during fuel receipt, selecting alternative fuels, and selecting fuel supply sources are covered in Section 10. Fuel system operation during fueling is covered in Section 3 and Section 4.

541-1.10 REFERENCES

541-1.10.1 NSTM CHAPTERS. The following chapters in the NSTM are referenced for additional information related to ship fuel systems:

a. NSTM Chapter 074, Volume 3, Gas Free Engineering .

b. NSTM Chapter 075, Threaded Fasteners.

c. NSTM Chapter 077, Personnel Protection Equipment.

d. NSTM Chapter 079, Volume 2, Practical Damage Control.

e. NSTM Chapter 079, Volume 3, Engineering Casualty Control

f. NSTM Chapter 233, Diesel Engines.

g. NSTM Chapter 234, Marine Gas Turbines

h. NSTM Chapter 503, Pumps.

i. NSTM Chapter 504, Pressure, Temperature, and Other Mechanical and Electromechanical Measuring Instruments.

j. NSTM Chapter 505, Piping Systems.

k. NSTM Chapter 542, Gasoline and JP-5 Fuel Systems.

l. NSTM Chapter 555, Shipboard Firefighting.

m. NSTM Chapter 593, Pollution Control.

n. NSTM Chapter 631, Volume 2, Preservation of Ships in Service (Surface Preparation and Painting).

o. NSTM Chapter 635, Thermal, Fire, and Acoustic Insulation

p. NSTM Chapter 670, Stowage, Handling, and Disposal of Hazardous General Use Consumables.

541-1.10.2 SHIP INFORMATION BOOK. Refer to volume 2 of the ship information book (SIB) for ship-specific information on fuel systems.

541-1.10.3 NAVSEA TECHNICAL MANUALS. Component technical manuals contain descriptions and instructions on installation, operation, maintenance, and safety precautions for the specific component. Particular components used in fuel systems vary widely among ships, so all the relevant technical manuals cannot be listed here. Some particular manuals of interest to many ships, however, are listed below:

a. 0411-LP-505-1402, Replenishment at Sea (NWP-14).

b. 0900-LP-016-0010, Manual for Cargo Tank Cleaning.

c. 0920-LP-046-3010, Single Probe Fueling System Operator’s Handbook.

d. 0920-LP-103-2010, Shipboard Level Maintenance, Probe Fueling Hardware.

e. 0955-LP-003-7010, Probe Fueling Receiver Instructions Handbook.

f. 0955-LP-026-8010, Double Probe Fueling System Manual.

g. Double Probe Fueling System Operator’s Manual.

h. 0965-LP-060-1010, GEMS Tank Level Indicating (TLI) System.

i. 0978-LP-035-3010, Single Probe Fueling Handbook.

j. 0987-LP-021-4010, GEMS Tank Level Gauging System.

k. S6438-AA-DDT-010, Actuating Assembly, Single Linear, For the Remote Actuation of Quick Acting Valves.

l. S9261-AN-MMA-010, Firesafe Duplex Fuel Oil Strainer, 3-Inch, 80 Gpm, Model 5001048.

m. S9570-AD-CAT-010, Underway Replenishment Hardware and Equipment Manual.

n. S9LSD-BC-GTP-010, Interface Manual for LSD 36 Class LCAC Handling and Support Services.

541-1.10.4 NAVY INSTRUCTIONS. Navy instructions relevant to ship fuel systems are listed below:

a. CINCLANTFLTINST CINCPACFLTINST 4026.1, Fuel Management Afloat .

b. NAVPETOFFINST 4290., CONUS Commercial Contracts for Bunker Fuel .

c. NAVPETOFFINST 4290.2, Overseas Commercial Contracts for Bunker Fuel .

d. OPNAV Instruction 5090.1A, Environmental and Natural Resources Program Manual .

e. OPNAV Instruction 5100 Series, Safety for Forces Afloat .

541-1.10.5 OTHER DOCUMENTS. Other military and commercial documents relevant to ship fuel systems are listed below:

a. ASTM D-1250, American Society for Testing and Materials, Petroleum Measurement Tables .

b. MIL-F-16884, Military Specification, Fuel Naval Distillate .

c. MIL-HDBK-200, Quality Surveillance Handbook for Fuels, Lubricants, and Related Products .

d. MIL-STD-777, Schedule of Piping, Valves, Fittings, and Associated Piping Components for Naval Surface Ships .

e. MIL-STD-278, Fabrication, Welding, and Inspection of Machinery, Piping, and Pressure Vessels of Ships of the U.S. Navy .

f. MIL-T-5624, Military Specification, Turbine Fuel, Aviation, Grades JP-4, JP-5, and JP-5/JP-8 ST .

SECTION 2.

SAFETY

541-2.1 F-76 AND JP-5 FLAMMABILITY CHARACTERISTICS

541-2.1.1 INTRODUCTION. The following paragraphs discuss fuel properties and behaviors that contribute to the potential for fire. Understanding the fuel is necessary to understanding how to prevent fuel fires.

541-2.1.2 FLASHPOINT. A fuel's flashpoint is the lowest temperature at which the fuel gives off enough vapor to form a mixture with air that is capable of being ignited by any ignition source. The practical significance of the flashpoint is that if fuel is at or above this temperature, the atmosphere exposed to the fuel is almost certainly flammable. Any spark or flame could ignite the fuel/air mixture. Autoignition temperatures are discussed in paragraph 541-2.1.3.

541-2.1.2.1 At temperatures below the flashpoint, evaporation alone will not create a flammable fuel/air mixture. However, even when fuel temperature is below flashpoint, hazards exist. Wicking and mist formation are hazards of fuel below the flashpoint, as discussed in paragraphs 541-2.1.4 and 541-2.1.5.

541-2.1.2.2 F-76 and JP-5 are required to have a minimum flashpoint of 140°F (60°C). Flashpoints are determined with precision equipment available on most ships. The test procedure is described in paragraph 541-10.9.2.6.

541-2.1.3 AUTOIGNITION TEMPERATURE. The autoignition temperature (AIT) of a fuel is the lowest temperature at which the fuel will ignite in air without a spark or flame. The AIT is also called the autogenous ignition temperature. AITs as low as 450°F (232° C) have been measured for F-76 and JP-5. The two fuels are considered equally hazardous.

541-2.1.3.1 Surfaces hotter than 125°F (52°C) generally are required by NSTM 635, Thermal, Fire, and Acoustic Insulation, to be insulated to protect personnel. Unfortunately, spraying fuel can rapidly soak conventional insulation and ignite if it contacts a surface temperature above the fuel's AIT.

541-2.1.3.2 AIT measurements are neither straightforward nor entirely reliable. Different values are measured under different circumstances. Don't assume, therefore, that hot surfaces cooler than 450°F (232°C) are necessarily safe. Make every effort to prevent fuel from dripping or spraying onto any hot surface of 400°F (204°C) or higher.

541-2.1.4 WICKING. Fuel wicks when it is drawn onto an absorbent solid material that can be ignited locally, as in the case of a candle or a kerosene lamp. The local hotspot on the wick caused by the flame vaporizes enough fuel to sustain the flame. Fuel in the material continues to be drawn toward the flame, to replenish the fuel that burns off. Rags soaked with fuel make excellent wicks and are therefore hazardous. Likewise, clothing is an effective wick. Fuel-soaked clothing remains a fire hazard for days.

541-2.1.5 MIST FORMATION. A fine mist or spray of fuel can be ignited easily and will continue to burn as long as fuel is supplied. Spray droplets that enter the flame zone vaporize and ignite. The fine drops mix well with the surrounding air, and thus are more easily heated than a pool of liquid. The most common source of fuel mist is leaking fuel under pressure. Spraying fuel is easily ignited, and the resulting fire continues to be fed by the fuel leak.

541-2.2 HOW SHIPBOARD FUEL FIRES START

541-2.2.1 FUEL LEAKS. Fuel fires are almost always caused by fuel leaks. A leak is any unintended release of fuel, whether from pipes that leak, valves that leak by, valves that are accidentally left open, containers that spill, or any other source. As long as the fuel is confined in the fuel system, it is unlikely that it will be ignited. When fuel is loose in the ship, however, it can meet unexpected ignition sources.

541-2.2.2 FUEL SPRAY. Leaks that spray fuel under pressure are the most dangerous kind. Spraying fuel ignites readily if it strikes a hot surface. Fuel spray fires usually start within seconds of when the leak first occurs and can rapidly grow to unmanageable size.

541-2.2.3 FUEL ACCUMULATION. Leaks that do not spray or do not impinge on hot surfaces are still dangerous. Fuel sometimes accumulates unnoticed until it reaches an ignition source. Then it unexpectedly explodes or bursts into flame. Such fires usually start within hours of when the leak first occurs. Even if the leaking fuel fails to reach an ignition source, an ignition source may come to the fuel: weld spatter, cigarette butts, or any other hot surface can ignite accumulated fuel.

541-2.3 HOW TO PREVENT SHIPBOARD FUEL FIRES

541-2.3.1 SEPARATION. The basic principle of preventing shipboard fuel fires is simple: keep fuel and ignition sources (usually hot surfaces) away from each other:

a. Maintain system integrity to keep fuel confined within the fuel system.

b. If fuel leaves the system, keep it away from hot surfaces. This is the purpose of flange shields, other spray shields, and vent and sampling connection piping that terminates over funnel drains. Keeping hot surfaces properly lagged also reduces the exposure of hot surfaces to spraying fuel.

541-2.3.2 GOOD MAINTENANCE. Fuel systems in good condition prevent the escape of fuel, which in turn could lead to fires. Most fuel fires begin with leaks caused by one of the following maintenance problems:

a. Generally poor system condition (such as corroded piping or not keeping up with scheduled valve maintenance).

b. Required safety items missing or in poor condition (such as flange shields, floating-ball check valves required for sounding tubes located in designated areas, and vent or sampling connection piping that terminates over drain funnels).

c. Maintenance procedure errors (such as reusing old gaskets, assembling incorrectly, or using incorrect parts).

541-2.4 SAFETY ACTIONS

541-2.4.1 GENERAL. The following paragraphs provide guidance on avoiding harmful effects of fuel contact, preventing fuel leaks, preventing fuel leaks from causing fires, preventing asphyxiation in fuel vapors, and reducing the consequences of fuel fires.

541-2.4.2 AVOID CONTACT WITH FUEL. Observe the following precautions (refer to NSTM Chapter 077, Personnel Protection Equipment):

a. Avoid breathing fuel vapors. Breathing air rich in fuel vapors can cause death. Report to a medical representative immediately after experiencing physical reactions from inhaling fuel vapor.

b. Avoid skin contact with fuel. Wear a face shield, apron, and foot covers when spills may occur. If contact occurs, wash as soon as possible with soap and water.

c. If F-76 or JP-5 gets in the eyes, immediately flush the eyes with fresh water; then seek immediate medical attention.

d. Avoid fuel spills on clothing, and remove clothing if fuel is spilled on it. F-76 and JP-5 do not evaporate readily, so soaked clothing can remain a fire hazard for days. Have fuel-soaked clothing washed or cleaned as soon as possible.

541-2.4.3 PREVENT LEAKS

a. Always be alert for the odor or visual evidence of fuel leaks. Don't assume the system must be sound just because it passed its last inspection. Look for fuel sprays, no matter how small. Pay particular attention to piping and joints near hot surfaces.

b. Inspect all carbon steel fuel piping in accordance with NSTM Chapter 505, Piping Systems .

c. Inspect copper-nickel or stainless steel fuel piping for physical damage.

d. Keep fuel system piping properly painted in accordance with NSTM Chapter 631, Volume 2 Preservation of Ships in Service (Surface Preparation and Painting) . Do not paint nonferrous and corrosion-resistant steel piping and valves in nonbilge areas.

e. Inspect all fuel tanks for leakage within ships. Inspections should include manhole covers and external sounding tubes.

f. Check fuel pump glands and valve packings for leakage.

g. Inspect boiler burner fronts for leakage while in operation and during cold checks.

h. Immediately shut off the fuel supply to any fuel system leak. Service system emergency shutdowns are described in paragraph 541-5.2.4.

i. Immediately repair all leaks, no matter how small.

j. If soft patches are used on fuel piping, permanently repair the piping as soon as possible. Soft patches on fuel piping should be reported by Departure From Specifications (DFS) request.

k. When assembling fuel system joints, always use new gaskets. Tighten the joints to provide the recommended compression for the particular gasket. Gaskets are discussed in **NSTM Chapter 505** .

l. Inspect tank overflow piping and check valves (including internal tank piping and check valves) and repair or replace them as necessary.

541-2.4.4 PREVENT FUEL ACCUMULATION. Accumulated fuel could be ignited by electrical arcs, weld spatter, sparks from grinding, cigarette butts, or other hot objects. When accumulated fuel is discovered, stop hot work and put out smoking lamps in the affected area; determine the source; stop the fuel from leaking, if possible; and clean up the fuel. Wipe up all fuel spills immediately.

541-2.4.4.1 Boiler Inspection. Inspect the bottoms of air casings and fronts of boilers for fuel accumulation or drips whenever the boiler is shut down after an extended period of operation. Fuel may accumulate in furnace double fronts if atomizers are partially plugged, if atomizers are not removed from the burners after being secured (which allows the atomizers to drip fuel), or if registers or furnace rings have carbon deposits. Locate and repair the leak if any fuel is detected. Observe the boiler frequently through burner and furnace sight glasses, and set atomizers and register doors correctly to prevent fuel accumulations.

541-2.4.4.2 Gas Turbine and Diesel Engine Inspection. When gas turbines or diesel engines are shut down after an extended period of operation, inspect units and the area around them for fuel accumulation and drips. Locate and repair the leak if any fuel is detected.

541-2.4.4.3 Bilge Inspection. When boilers, gas turbines, or diesel engines are operating, inspe ct bilges to make sure they are free of accumulated fuel.

541-2.4.4.3.1 Some fuels, such as JP-5, are clear, making their presence on the surface of bilge water difficult to detect. The presence of fuels in the bilge can be detected by spreading a thin coat of water-indicating paste

(National Stock Number [NSN] 6850-00-001-4194) on one side of a metal rod, and fuel-indicating paste (NSN 6850-00-270-5526) on the other side, then inserting the rod in the bilge liquid. Color changes in the pastes will indicate the presence of water or fuel.

541-2.4.4.3.2 Pump oily waste from the bilges using the oily waste transfer system. Do not light off boilers, diesel engines, or gas turbines when oily waste is in the bilges or on nearby deckplates. (They need not be secured if already operating.)

541-2.4.4.4 Lighting-Off Torch Pot. Make sure that the lighting-off torch pot does not leak. Do not overfill the pot. Overfilling may cause spilling when the lighting-off torch is dipped. The lighting-off torch pot shall be welded or bolted to a structural member of the deckplating in front of each boiler, so that it cannot be knocked over. When boilers are secured and will not be lighted off within 24 hours, drain fuel from the torch pots.

541-2.4.4.5 Drip Pans. Check the drip pans under pumps, strainers, boiler burner fronts, and vent connections. Locate and repair the leak if any fuel is detected.

541-2.4.4.6 Deckplates. Keep deckplates clean. Fuel on the deckplates is both a fire hazard and a slipping hazard.

541-2.4.5 PROPERLY DISPOSE OF FUEL-CONTAMINATED WASTE. Place waste contamin ated with fuel in firesafe containers for disposal in accordance with hazardous material (HAZMAT) instructions in NSTM Chapter 593, Pollution Control . Such wastes include:

a. Fuel-soaked rags.

b. Used coalescer elements.

c. Used prefilter elements.

d. Residue removed from purifiers during cleaning.

e. Sludge removed from fuel tanks during cleaning.

f. Any other fuel-contaminated waste.

541-2.4.6 DETECT FUEL VAPORS. Combustible gas indicators detect flammable gases and vapors. Refer to NSTM Chapter 079, Volume 2, Practical Damage Control, and NSTM Chapter 074, Volume 3, Gas Free Engineering, for operating instructions and for manufacturers and model numbers. Use these indicators to check any tank or space where fuel vapors may be present. Such spaces include fuel tanks, spaces into which fuel might leak, poorly ventilated spaces that contain fuel, or any other space in which the presence of fuel vapors is suspected. High concentrations of fuel vapors are dangerous to breathe and may be flammable.

541-2.4.7 OBSERVE TANK ENTRY PRECAUTIONS. Fuel tanks are considered immediately dangerous to life or health (IDLH) according to **NSTM Chapter 074, Volume 3** . Entry into a space that is IDLH is prohibited under normal operations. No person shall enter a tank known or suspected to contain fuel or fuel vapors at any time without first having received permission to enter such a tank from the Commanding Officer. Before granting permission to enter a fuel tank or any tank that may contain fuel or fuel vapors, the Commanding Officer shall ensure that safety precautions and instructions set forth in **NSTM Chapter 074, Volume 3** , are carried out and that personnel supervising the entry are familiar with these instructions and precautions.

541-2.4.8 AVOID IGNITION SOURCES. Where possible, isolate ignition sources (such as spark-producing components or hot surfaces) from the vicinity of fuel.

a. If fuel could potentially spray or drip on any surface reaching 400°F (204°C) or higher, shield that surface even if it is insulated, since fuel can rapidly soak insulation and ignite.

b. Repair or replace broken or missing insulation on hot surfaces.

c. Make no repairs involving hot work near fuel tanks and piping without a hot-work permit. Observe precautions in NSTM Chapter 074, Volume 1, Welding and Allied Processes, and Volume 3, Gas Free Engineering .

d. Avoid using portable electric lights near fuel tanks or during repairs in engineering spaces that have not been declared gas free. When such lights are required, fit them with explosion-proof enclosures and heavy wire guards, and test them for complete insulation before use in accordance with NSTM Chapter 330, Lighting. Naked lights such as matches and cigarette lighters are forbidden .

e. In small ships, such as destroyers, where hazardous areas cover a large portion of the ship, the smoking lamp shall be out throughout the ship while fuel is received or discharged. On larger ships, such as aircraft carriers, where the hazardous area is confined to a small portion of the ship, the Commanding Officer may elect to prohibit smoking only within a limited area.

f. Do not smoke in engineering spaces that have not been determined to be safe. Appropriate signs shall be properly posted.

541-2.4.9 KEEP FUEL SYSTEM SAFETY FEATURES IN GOOD REPAIR. Many features have been added to ship fuel systems to make them safer to operate. It is essential that all fuel system safety features be installed and maintained in good condition. Many of these features were added in direct response to past fuel fires. Fuel system safety features include the following:

a. Sounding tube floating-ball check valves (paragraph 541-9.5.3) are required for sounding tubes that terminate in hazardous areas. The floating-ball check valve prevents fuel from spilling from the sounding tube if the tank is overfilled while the sounding tube is open. Several fuel fires have started with sounding tube fuel spills.

b. Flange spray shields (paragraph 541-9.9.3) are required for flanged connections in locations identified in **NSTM Chapter 505** . Flange spray shields prevent fires caused by poor joint assembly, gasket failure, or improper torquing of fasteners. They capture any fuel spray from the joint and cause it to drip or dribble to a safe location instead of spraying onto nearby hot surfaces.

c. Emergency cutout valves (paragraph 541-5.2.4) are required for casualty control. The valves are provided in fuel service tank suction lines, boiler front fuel lines, gas turbine fuel lines, and steam lines supplying turbine-driven service pumps. Emergency cutout valves provide various ways to quickly shut off fuel flow in the service system, either locally or outside the space.

d. Service pump remote shutdown pushbuttons (paragraph 541-5.2.4.4) are required for motor-driven fuel service pumps. The pushbuttons are located outside the space and are provided for casualty control.

e. Integral cover fuel spray deflectors are required for all service system strainer, filter/separator, and prefilter covers. The deflectors direct any fuel that leaks past the cover gasket or O-ring downward, where it is less likely to strike a hot surface.

f. All sampling and vent connections inside the ship shall discharge downward into a funnel. The funnel directs the fuel to the oily water drain collecting system. This arrangement minimizes the risk that any fuel that sprays

from open sampling or vent connections will strike a hot surface and ignite. Spray shields shall be provided over any hot surfaces (such as steam lines or hot drain lines in bilges) under the funnels.

g. Sampling connection cutout valves are provided at all sampling connections. Boiler front connections have been provided by ship alteration (SHIPALT) with two cutout valves in series. The double cutout valve is for boiler front connections only. All other locations require only one sampling valve.

h. Fuel sampling connections shall not have end caps. Pressure can build under the end cap if the sample valve leaks, causing a momentary fuel spray when the cap is removed. The spray can soak clothing, contact skin or eyes, or strike an ignition source. Remove existing end caps.

i. High-performance butterfly valves (HPBV) (MIL-V-24624) shall replace old-style rubber-lined butterfly valves (MIL-V-22133) in fuel systems whenever possible. Design problems with the old valve can cause excessive leak-by, upper stem ejection when the actuator is removed, or lower stem ejection due to a retainer pin failure. Where old-style valves have not been replaced, a keeper plate should be installed to prevent the lower stem from ejecting due to a retainer pin failure. The butterfly valve changeover and the installation of the keeper plate on old-style valves are discussed further in **NSTM Chapter 505** .

j. Firesafe Fuel Oil Strainers (FSFOS), Model 5001048, have replaced previous models. The FSFOS is designed to minimize danger to the ship and to operating personnel. The FSFOS (paragraph 541-9.12.3.3) can be cleaned without removing the covers. Safety interlocks prevent the cover of an online basket from being removed, prevent shifting to the other basket if its cover is removed, and prevent an online basket from draining under system pressure. Spray deflectors on the compartment covers deflect fuel spray downward if an O-ring seal fails.

k. Vent screens (paragraphs 541-9.12.5.1 and 541-9.12.5.2) are provided in vents of fuel tanks to retard flashback if the system is accidentally exposed to an ignition source.

SECTION 3.

FUEL STORAGE SYSTEMS

541-3.1 INTRODUCTION

541-3.1.1 Fuel storage tanks hold fuel as it is loaded onto the ship, before it is cleaned for use by propulsion and auxiliary equipment. The three kinds of fuel storage tanks differ in the way seawater ballasting is related to fuel storage and ship stability.

a. Separate fuel tanks and ballast tanks (paragraph 541-3.3).

b. Fuel or ballast tanks (paragraph 541-3.4).

c. Seawater-compensated fuel tanks (paragraph 541-3.5).

541-3.1.2 This section briefly describes certain fueling operations, but fueling operations shall always be conducted according to the ship's Engineering Operational Sequencing System (EOSS) procedures .

541-3.2 GENERAL INFORMATION

541-3.2.1 RELATION BETWEEN FUEL STORAGE AND SEAWATER BALLASTING. Fuel is held in storage tanks located throughout the ship. The large amount of fuel on a ship is very heavy, so the number and location of empty fuel tanks affect the ship's stability, list, and trim. Incorrect handling of fuel also affects operating

fuel economy if storage distribution causes drag in excess of intended trim. Consequently, fuel storage is closely related to ballasting. The Damage Control Officer is responsible for the ship's loading and ballasting. The oil king must move fuel and ballast in these tanks in accordance with the ship's liquid loading requirements. Follow the tank sequencing table or any appropriate instructions in the ship's damage control book.

541-3.2.2 SERVICE TANKS. Fuel storage and ballasting methods apply only to fuel storage tanks. Never introduce seawater into fuel service tanks.

541-3.2.3 RATED TANK CAPACITY. The rated capacity of a fuel storage tank that is not seawater-compensated is 95 percent of its total capacity. The remaining 5 percent is reserved to allow the fuel to expand. Never fill uncompensated fuel tanks to more than 95 percent of capacity.

541-3.2.4 TRANSFER SYSTEM. Fuel storage systems are considered part of the ship's fuel filling and transfer system, commonly called the transfer system. Information on operation and system interfaces for fuel storage systems is included in Section 4.

541-3.3 SEPARATE FUEL TANKS AND BALLAST TANKS

541-3.3.1 DESCRIPTION. In this system, fuel storage tanks and seawater ballast tanks are completely separate. Seawater is never introduced into a fuel tank and fuel never enters a ballast tank. This arrangement keeps the fuel free of seawater and keeps the ballast seawater clean. Ballast seawater from separate ballast tanks that never contain fuel can be discharged within prohibited zones because the ballast seawater contains no fuel.

541-3.3.2 MODIFIED CLEAN BALLAST SYSTEM. FFG 7 class ships have a modified clean ballast system. The system is primarily a separate fuel and ballast system, but if the fuel load falls below a certain point and additional ballast is required, designated fuel tanks may be ballasted with seawater.

541-3.4 FUEL OR BALLAST TANKS

541-3.4.1 DESCRIPTION. This system has no separate seawater ballast tanks. Empty fuel storage tanks may be ballasted with seawater, but these may be limited to particular tanks. Ballast seawater is introduced by the firemain through separate tailpipes and is removed by the main drain eductors and the stripping pumps.

541-3.4.2 AVOID MIXING FUEL AND SEAWATER. Completely strip all ballast seawater out of a tank before filling the tank with fuel. Residual seawater in the tank will contaminate the fuel added to the tank. Conversely, never ballast a fuel tank until it is completely empty of fuel. Removing all fuel avoids wasting fuel when the tank is ballasted and reduces the possibility of contaminating the ballast seawater. Removing every trace of fuel from a tank, however, is impossible. Consequently, the ballast seawater in a fuel tank is considered oily waste. Do not discharge ballast seawater from a fuel storage tank overboard within a prohibited zone. See NSTM Chapter 593, Pollution Control, for more information.

541-3.4.3 HARBOR WATER. Harbor water is often polluted. To avoid drawing silt or other contaminants into the tank, don't use harbor water as ballast seawater in any fuel tank.

541-3.4.4 TANK PIPELINE SAMPLE CONNECTIONS. Ballasted fuel tanks whose tops are above the transfer system manifold have a pipeline sample connection between the tank bulkhead isolation valve and the mani-

fold. If seawater is detected in the fuel transfer system, take samples from the sample connections at all ballasted tanks. If any sample contains seawater, the isolation valve at that tank is probably leaking.

541-3.5 COMPENSATED FUEL STORAGE TANKS

541-3.5.1 DESCRIPTION. Seawater-compensated fuel storage tanks are always completely full of liquid. Ballast seawater enters tanks as fuel is removed, and is displaced overboard as fuel is added. The fuel and seawater in a tank tend to remain separate because fuel floats on seawater. Figure 541-3-1 shows the basic seawater-compensated fuel storage system used on the DD 963, DDG 993, CG 47, and DDG 51 classes.

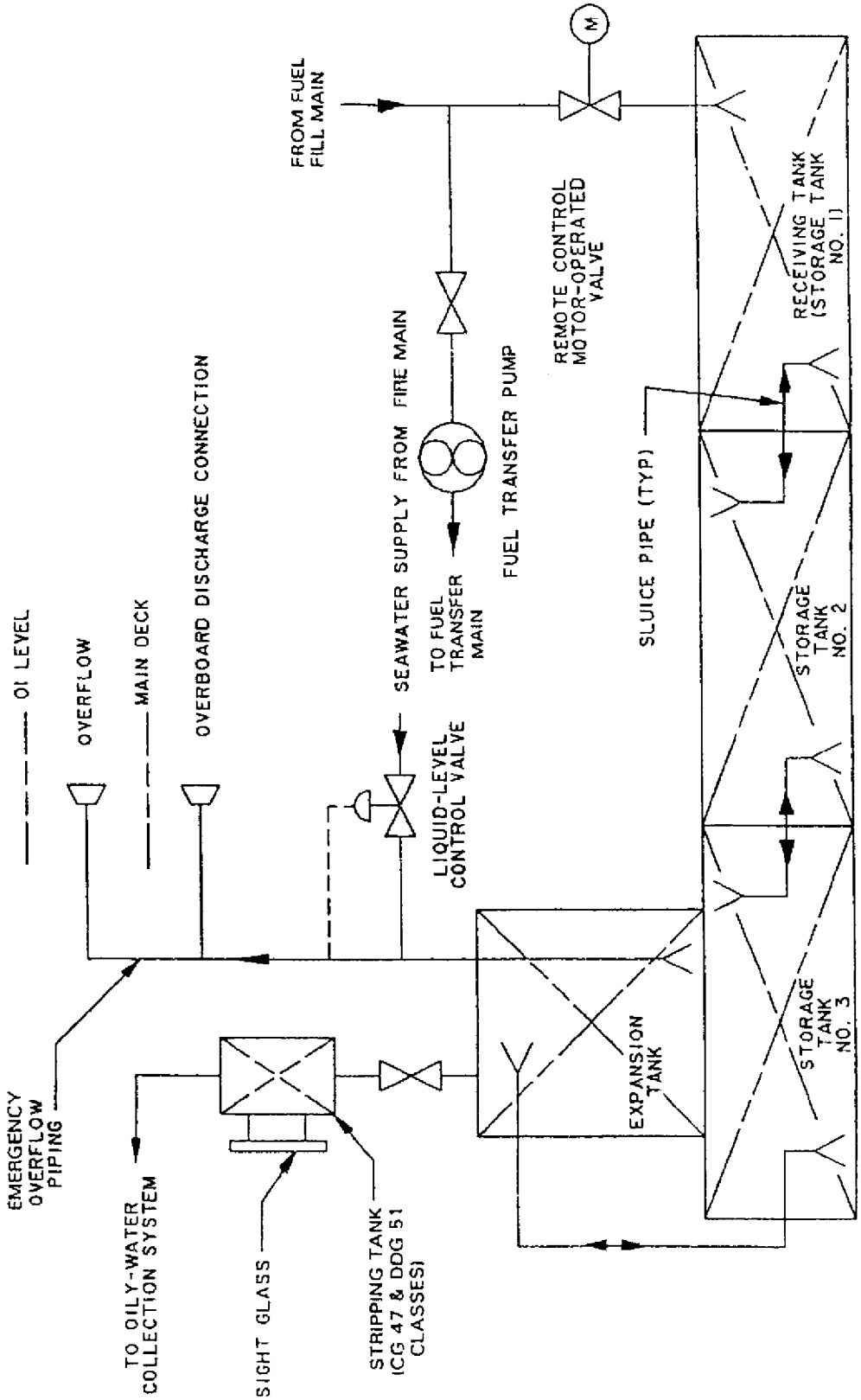

Figure 541-3-1 Typical Seawater-Compensated Fuel Storage Tank Bank

541-3.5.1.1 Tank Banks. Storage tanks are connected in banks. The transfer system is connected to the top of the first tank, which is called the receiving tank. The bottom of each tank is connected to the top of the next tank through a sluice pipe. The bottom of the last storage tank is connected to the top of the expansion tank. The overflow piping runs from the bottom of the expansion tank up to an overboard discharge connection and an overflow. The seawater standing in the overflow piping keeps the liquid in the storage tanks under pressure.

541-3.5.1.2 Stripping Tank. CG 47 and DDG 51 class ships have a small tank, called a stripping tank, on top of each expansion tank. If fuel overflows into the expansion tank, it will become visible in the stripping tank sight glass.

541-3.5.2 FUNCTIONAL DESCRIPTION. Refer to Figure 541-3-1 for discussions about transferring fuel to and from seawater- compensated tank banks.

541-3.5.2.1 Filling a Tank Bank. Fuel enters the top of the receiving tank from the transfer system piping. Entering fuel forces seawater out the bottom of the tank through the sluice pipe and into the top of the second tank. The seawater entering the second tank forces seawater out the bottom of the tank and into the third tank. This displacement of seawater continues throughout the storage tanks and the expansion tank. Seawater is forced from the expansion tank up into the overflow piping, where it discharges overboard.

541-3.5.2.1.1 When the receiving tank is full of fuel, fuel begins flowing through the sluice pipe into the top of the second storage tank. Each tank in turn fills with fuel from the top down, until the last storage tank is full.

541-3.5.2.1.2 Fuel is not allowed to flow into the expansion tank. The expansion tank prevents fuel from going overboard if the temperature causes the fuel to expand, or acts as a buffer if the last storage tank is accidentally allowed to overflow. The last storage tank in each tank bank has a high-level alarm set at 90 percent full. Actuation of the alarm causes the associated tank fill valve to close automatically.

541-3.5.2.1.3 On ships with stripping tanks, personnel shall check the stripping tank sight glass prior to filling. If fuel appears in the sight glass, the expansion tank shall be stripped. The DD 963 class expansion tanks have stripping connections, which require sampling and, if necessary, stripping prior to filling.

541-3.5.2.2 Transferring Fuel. The transfer system draws fuel from the top of the receiving tank. Because the tanks are under pressure from the seawater standing in the overflow piping, more liquid flows into the receiving tank to keep it full. Fuel flows from the top of the second tank to the bottom of the receiving tank through the sluice pipe. Likewise, fuel or seawater flows from the top of each tank to the bottom of the next tank closer to the receiving tank, keeping all tanks full. As the expansion tank level empties to supply seawater to the last storage tank, seawater from the overflow piping enters the expansion tank. A liquid level control valve automatically adds seawater from the firemain to maintain the level of seawater in the overflow piping.

541-3.5.3 HARBOR WATER. Harbor water is often polluted. To avoid drawing silt or other contaminants into the tanks, don’t use harbor water as ballast seawater in any fuel tank. The firemain may provide harbor water to the overflow piping any time fuel is removed from a tank bank. Top off service tanks before entering port. Avoid transferring fuel between storage tanks while in port.

541-3.5.4 PREVENT POLLUTION. Seawater is discharged when fuel is added to a tank bank. Discharge seawater may contain trace amounts of fuel. The fuel content of discharge seawater depends on the fueling rate. Each

tank bank is designed for a maximum fill rate of approximately 1,000 gal/min at sea and 400 gal/min in port. Follow EOSS procedures carefully while filling in port and at sea. Exceeding these rates may cause the seawater overboard discharge to exceed water quality requirements of OPNAVINST 5090.1A.

541-3.5.4.1 Inport Refueling Valves. Inport refueling valves in each tank-bank fill line are closed to reduce the fueling rate when fueling in port. The inport refueling valves are butterfly valves with holes drilled through the disc. In the closed position, these valves limit the flow of fuel into each tank bank to approximately 400 gal/min.

541-3.5.4.2 Fueling Rate. The receiving ship and the supply ship shall maintain extremely close communication to be sure that flow rates and line pressures are not excessive. Throttle flow into the tanks according to EOSS to avoid overpressurizing the tanks.

CAUTION

Fueling a compensated tank bank too quickly can overpressurize the tanks, which can lead to tank rupture.

541-3.5.4.2.1 Fueling rates higher than 1,000 gal/min can cause fuel to mix with water and can even cause the fuel to channel through the tank bank. The fuel channels through the tank, into the sluice pipe, and through the next tank, leaving pockets of water and failing to fill each tank completely with fuel.

541-3.5.4.2.2 Follow EOSS procedures carefully during fueling. Monitor tank pressures closely to avoid overpressurizing the receiving tank. Watch the tank level indicators (TLI) for erratic behavior that may be caused by fuel channeling through the tanks. Pay particular attention to the flow rates to the remaining tank banks as the tank banks are filled and closed off. How to fill tanks is covered in more detail in paragraph 541-4.3.

541-3.5.4.3 Local Inport Fueling Requirements. According to Navy requirements, when the inport refueling valves are closed, the discharge seawater from compensated tank banks is clean enough to discharge within prohibited zones. Local requirements may vary. Before fueling in port, check with port personnel on local requirements for containing the discharged seawater. It may be necessary to capture the seawater with a boom or discharge it to a barge for testing and treatment. Ships have connections for attaching a hose to the overboard discharge.

541-3.5.5 DEBALLASTING COMPENSATED TANKS. Compensated tanks are maintained full of liquid for stability purposes. Draining them for maintenance is more difficult than draining uncompensated tanks. The tanks are normally drained by shore activities rather than ship's force.

541-3.5.5.1 Preliminary Actions. Before draining compensated tanks, remove all fuel from the tank bank. Remove fuel from the entire bank, even if only one tank is to be drained, because liquid moves freely between tanks through the sluice pipes. Once the fuel is removed, secure the seawater supply from the firemain to the overflow piping, so the seawater in the tanks can be removed. Check with local authorities on disposal requirements of the seawater remaining in the tanks.

541-3.5.5.2 Air Pressure. Do not use air pressure to blow seawater from compensated tanks. The pressurized air trapped in the tanks acts as an accumulator, making it impossible to stop the liquid flow quickly. If fuel were detected going overboard, for example, stopping the air compressor would not immediately stop flow from the tanks.

541-3.5.5.3 Draining. Pump out the bank expansion tank first, because it is always higher than the other tanks. If just one tank is drained, adjacent tanks that are higher in the ship will also drain until the seawater level is below the higher end of the connecting sluice pipe. Drain the tank by connecting a deballast hose between the tank's dewatering connection and the drainage system. The oily waste pump drains the tank through the drainage system to slightly below the level of the tank manhole. Open the manhole, and drain the rest of the tank, using a 200-gal/min portable pump.

SECTION 4.

FUEL TRANSFER SYSTEMS

541-4.1 INTRODUCTION

541-4.1.1 The ship fuel filling and transfer system, usually called the fuel transfer system, has the following functions:

a. Filling storage tanks. Fuel is pumped in at the deck connections and flows to the storage tanks. The transfer pump is not used.
b. Transferring fuel between storage tanks. The transfer pump takes suction from one or more storage tanks and discharges to one or more other storage tanks.
c. Transferring fuel from storage tanks to service tanks. The transfer pump takes suction from one or more storage tanks and discharges through a strainer, filter/separator, or centrifugal purifier to a service tank.
d. Providing fuel to other ships or defueling storage tanks. The transfer pump takes suction from one or more storage tanks and discharges to a deck connection. The same deck connections are used for filling the ship and offloading fuel.

541-4.1.2 Transfer systems vary considerably among ships. Consult the Ship Information Book (SIB) or other technical manual for your ship for details. Ships often have multiple transfer pumps, strainers, or purifiers. Various crossconnections enable different pumps and strainers, filter/separators, or purifiers to be used together. This chapter makes no attempt to describe all transfer system variations, but all ship fuel transfer systems operate on the same basic principles given here.

541-4.1.3 This section briefly describes certain fueling operations, but **fueling operations shall always be conducted according to the ship's Engineering Operational Sequencing System (EOSS) procedures** .

541-4.2 GENERAL INFORMATION

541-4.2.1 AVOIDING OVERBOARD OVERFLOW. Filling and transferring can cause a fuel tank to overflow. Do not fill uncompensated tanks above 95 percent of capacity. Fill the last fuel tank in a compensated tank bank to only 85 percent full when in port and to 95 percent full when at sea. Overfilling the tanks wastes fuel and causes pollution.

541-4.2.1.1 Fuel systems have the following features to make overboard overflow less likely:

a. Uncompensated storage tanks usually overflow to a separate overflow tank rather than directly overboard.

b. Tanks that overflow directly overboard shall have high-level alarms (see paragraph 541-9.6.2.1).

c. Compensated storage tank banks include an expansion tank full of seawater to contain fuel from an overfilled tank bank. The last fuel tank in the tank bank has a high-level alarm that closes the associated tank fill valve when actuated.

541-4.2.1.2 When tanks are filled in port, whether by ship fueling or by internal transfer, post a watch near the tank overflows to stop the operation immediately if fuel overflows. Avoid refueling or transferring fuel at night.

541-4.2.2 SEPARATE TRANSFER AND PURIFIER PUMPS. Some ships with purifiers have separate transfer and purifier pumps. Purifier pumps have a lower flow capacity than transfer pumps, to avoid exceeding the purifier's flow capacity. Use the transfer pump for transfer between storage tanks and for defueling, since these operations do not use the purifier. Use the purifier pump for transfer from a storage tank to a service tank.

541-4.2.3 STRIPPING. The transfer system on some ships is used to strip storage or service tanks. Gas turbine ships recirculate service tank fuel through the transfer system purifier rather than stripping to a contaminated oil settling tank (COST). See paragraph 541-6.2.4.2 for more information on service tank recirculation.

541-4.3 FILLING

541-4.3.1 GENERAL INFORMATION

541-4.3.1.1 Flow Rate. Each fuel fill deck connection designed for 7-inch fuel hose can pass up to 3,000 gal/min. Two or more fuel fill deck connections are often used at once, resulting in total filling rates of 6,000 gal/min or more. Each tank is usually rated for 500 gal/min. (Smaller ships have deck connections designed for 2-1/2 inch hose. Each 2-1/2 inch deck connection can pass 200 to 250 gal/min. Tank fill rates are usually similar.) The size of the tank vent and overflow piping limits flow to uncompensated tanks. The size of the sluice piping and overflow piping limits flow to compensated tanks.

541-4.3.1.2 Pressure. The supplying ship provides filling pressure. The fuel system's flow resistance at the flow rate determines the pressure in the piping. Systems are sized to fill tanks at the correct rates with a deck connection pressure of 40 lb/in2. Filling pressure may be higher, however, especially as tanks fill and are closed off. Transfer system piping used in filling must be able to withstand 200 lb/in2 even if the transfer pump is rated only at 50 lb/in2.

541-4.3.2 OPERATION. Conduct all operations according to the ship's EOSS procedures.

541-4.3.2.1 Prepare the Tanks for Filling. Before fueling, consolidate the fuel on board in as few storage tanks as possible by transferring, to avoid mixing fuel from different sources and to minimize the fueling time required. Deballast and strip as many storage tanks as possible without jeopardizing ship stability. If some tanks cannot be deballasted before fueling, deballast them during fueling after enough fuel is on board to provide the required stability.

541-4.3.2.2 Determine the Order of Filling. Use the ship's tank loading charts to determine the correct order in which to fill tanks. Coordinate filling with Damage Control personnel. Fueling adds considerable weight to the ship, so make sure that the distribution of this weight during fueling is controlled to enhance ship stability and avoid excessive hull flexing.

541-4.3.2.3 Seawater-Compensated Tank Banks. If filling seawater-compensated tanks in port, make sure the inport refueling valves are closed (see paragraph 541-3.5.4.1). Check with port personnel on the local containment requirements for ballast seawater displaced from the storage tanks. Fill the last fuel tank in a compensated tank bank to only 85 percent full when in port, and to 95 percent full when at sea.

541-4.3.2.4 Fill the Tanks. To minimize system resistance and thus maximize filling rate, align the transfer system to fill as many tanks at once as possible. Monitor the tank levels as described in paragraph 541-4.3.2.5. Monitor tank pressures (deck-connection pressures for DDG 51 class) in seawater-compensated tank banks to ensure that pressures do not exceed the maximum allowed .

541-4.3.2.4.1 As each tank approaches full, throttle the flow into the tank so the tank can be topped off more slowly. Close the tank cutout valve when the tank is full. For all uncompensated tanks, full is considered 95 percent of the tank's total capacity (see paragraph 541-3.2.3).

541-4.3.2.4.2 As each tank is closed off, the filling rate to the other tanks is increased. Reduce the ship's filling rate prior to closing a tank fill valve to avoid exceeding the maximum rate for each remaining tank. Have the supplying ship slow the delivery rate as necessary. Estimate when fueling will be completed, and have the supplying ship stop fuel delivery before closing the isolation valve of the last tank.

541-4.3.2.5 Monitor Tank Level. Check each tank level before fueling. Shortly after fueling begins, check the tank level again to verify that the system is aligned correctly and the tank is being filled.

541-4.3.2.5.1 Do not rely on the electric tank level indicator (TLI) when fueling tanks with sounding tubes. TLIs are not always accurate and should be checked by sounding, especially when the tank is approaching full or when in port. Compensated tanks do not have sounding tubes, so their level can be monitored only by the TLI.

541-4.3.2.5.2 Take soundings every 3 or 4 minutes while the tank is first being filled. After the tank reaches about 3/4 full, take soundings continuously until the tank is full (95 percent of capacity). Replace the sounding tube cap after each sounding, to minimize the fuel vapors entering the space and to prevent a fuel spill if the tank overflows. Sounding tube terminals in hazardous locations (paragraph 541-9.5.3.2) are required to have floating-ball check valves to prevent fuel spills.

541-4.4 TRANSFERRING BETWEEN STORAGE TANKS

541-4.4.1 REASONS FOR TRANSFERRING. Fuel is transferred between storage tanks to consolidate the contents of partially full tanks and to move weight as necessary for ship list and trim.

541-4.4.1.1 Fuel is consolidated to reduce free surface, which affects ship stability. Fuel is also consolidated before refueling to speed up the refueling process.

541-4.4.1.2 On ships with seawater-compensated tanks, transfers of fuel have no effect on free surface because the tanks are always full of liquid. Since the specific weight of seawater is greater than that of fuel, however, removing large amounts of fuel from only one area of the ship could adversely affect list, trim, and stability. Conduct fuel transfers, therefore, in such a way that fuel is removed evenly from each bank of tanks.

541-4.4.2 OPERATION. Conduct all operations according to the ship's EOSS procedures.

541-4.4.2.1 Sample and Strip the Tanks. Before transferring fuel, sample the tanks as required by Table 541-10-2 and strip as necessary. This is an opportunity to remove water and contaminants that may have settled out in the tanks before the transfer operation stirs them up again.

541-4.4.2.2 Gravity Flow. Some transfers between uncompensated tanks can be accomplished by gravity if the liquid level of the supply tank is higher than the liquid level of the receiving tank.

541-4.4.2.2.1 The piping run between the two tanks need not be all downhill, but the transfer may not work if at any point the piping runs higher than the supply tank's fuel level. If transferring from a tank located higher than the receiving tank, such as from a wing tank to an inner bottom tank, it may be possible to completely fill the receiving tank by gravity.

541-4.4.2.2.2 Align the system to connect the supply and receiving tanks with no pump in the path (flow will not pass through secured positive displacement pumps). When the last valve is open, fuel will begin flowing to the tank with the lower level. Close the system valves when the receiving tank is full, the supply tank is empty, or the levels have equalized, causing flow to stop.

541-4.4.2.3 Pumping. If your ship has multiple transfer pumps, use the pump closest to the supply tank to minimize the suction requirements. Align the system without starting the pump. Perform the system preoperational integrity test described in paragraph 541-4.5.2.1 to verify the system alignment. When the test shows the alignment is correct, pump fuel from the supply tank to the receiving tank. Secure the pump when the supply tank is almost empty or the receiving tank is full. Fuel flowing through the pump lubricates the pump internals. Do not allow the pump to lose suction, because the pump may run dry, damaging the pump internals.

541-4.5 TRANSFERRING FROM STORAGE TANKS TO SERVICE TANKS

541-4.5.1 GENERAL INFORMATION

541-4.5.1.1 Types of Filtration. Steam ships have strainers in their service tank fill lines to remove solid contaminants from fuel being pumped to service tanks. Gas turbine ships have centrifugal purifiers to remove solid contaminants and free water. Most diesel ships have purifiers, although some older ships have filter/separators.

541-4.5.1.2 Heaters. Ships with purifiers also have fuel heaters upstream of the purifiers to reduce the viscosity of F-76 for optimum purifier operation and to prevent fuel from waxing. Heaters are either steam or electric. Because of its lower viscosity and cloud point, JP-5 is not heated at any temperature. If heating is not required, route the fuel through a heater bypass valve. Heater installations include high-temperature alarms.

541-4.5.1.3 Filling Service Tanks. Fill service tanks as soon as suction has been switched to the standby service tank. Do not fill a service tank that is being used to supply fuel to the service system.

541-4.5.2 OPERATION. Conduct all operations according to the ship's EOSS procedures.

541-4.5.2.1 System Preoperational Integrity Test. This test provides a quick check on system alignment, to verify that fuel is not being delivered to an unintended destination. Run this test during the startup of transfer operations for ships with strainers or filter/ separators. Do not run it with alignments that pass fuel through purifiers, because the high back pressure established during the test would disturb the proper fuel flow through the purifier.

541-4.5.2.1.1 The primary purpose of this test is to detect misalignments, not fuel leaks. Most transfer system leaks will not be detected by this test. System pressure can still reach the rated maximum, even with a sizable fuel system leak. Don't assume the system is safe just because it passes this integrity test.

541-4.5.2.1.2 Perform the preoperational integrity test during startup of the transfer operation. Before beginning the transfer, establish communication between personnel at the receiving tank inlet valve and the pump discharge pressure gauge. Align the system as required and start the transfer pump. Gradually throttle the receiving tank inlet valve until the pump discharge pressure reaches its rated maximum value. Do not close the valve enough to increase pressure beyond its rated value, or the pump relief valve will lift.

541-4.5.2.1.3 The system is correctly aligned if the pressure reaches its rated maximum. Open the receiving tank inlet valve wide and continue with the transfer operation.

541-4.5.2.1.4 If the pump discharge pressure never reaches the rated maximum, even with the receiving tank inlet valve closed, there must be another flow path for the pump discharge. The three possibilities are:

a. An unintended open valve, probably allowing fuel into another tank.

b. A pump relief valve that has failed in the open position.

c. A major system leak.

541-4.5.2.1.5 The most likely cause is an unintended open valve. Immediately secure the system and check the valve alignment. If the alignment appears correct, look for evidence of major leakage in areas where the leak might not have been observed.

541-4.5.2.1.6 If the system is aligned correctly and there is no evidence of a major fuel leak, start the pump again and throttle the system valve closest to the pump discharge. Using the valve closest to the pump discharge eliminates the effects of any misalignment or leak downstream of that valve. If the pump discharge pressure still does not reach the maximum, the relief valve has probably failed in the open position.

541-4.5.2.2 Ships with Strainers. Sample (see Table 541-10-2) all storage tanks from which fuel will be drawn, and strip them, if necessary, before beginning the transfer operation. This will minimize the amount of free water and solids delivered to the service tank.

541-4.5.2.2.1 Strainer Pressure Test. If the strainer was cleaned since the last time it was pressurized, the strainer shall be pressure tested for leaks before the system preoperational integrity test is conducted.

1. Align the system for transfer, but close the strainer inlet valve. If your ship has multiple transfer pumps, use the pump closest to the supply tank, to minimize the suction requirements.

CAUTION

If system flow cannot be established within 1 minute after the pump is started, stop the pump. Recirculating fuel in the pump can overheat and damage the pump.

2. Start the transfer pump at low speed.
3. Since the strainer inlet valve is closed, the pump discharge relief valve opens immediately and begins recirculating fuel back to the pump suction (see paragraph 541-9.11.3.2). The relief valve acts as a crude pressure regulator, maintaining a roughly constant inlet pressure at the strainer.
4. Gradually open the strainer inlet valve to slowly increase pressure in the strainer while inspecting for leakage. If there is any indication of leakage, shut the inlet valve and stop the pump immediately. Investigate and repair the problem before continuing the transfer operation. When the strainer inlet valve is open, check the pump discharge pressure gauge. A drop in pressure below the relief valve setting indicates that system flow is established.

541-4.5.2.2.2 After testing the strainer, or if strainer testing is not required, run the system preoperational integrity test as described in paragraph 541-4.5.2.1. Once the system alignment is verified, normal transferring begins.

541-4.5.2.2.3 If the strainer differential pressure reaches the maximum allowed for your ship, stop transferring, clean the strainer, realign the system according to the ship's instructions, and resume transferring. If the strainer differential pressure comes close to the maximum allowed, plan to clean the strainer as soon as the transfer is completed, to make sure the differential pressure does not rise too high during the next transfer operation.

541-4.5.2.2.4 If the storage tank nears empty before the service tank is full, begin taking suction from another storage tank in addition to the first one. Avoid actually losing suction on the pump, because running the pump dry damages the pump internals.

541-4.5.2.2.5 Stop the pump when the service tank is full. Close the valves after the pump is stopped, to avoid damaging the pump or lifting the relief valve.

541-4.5.2.3 Ships with Filter/ Separators. Operating transfer systems with filter/separators is very similar to operating transfer systems with strainers. Log the differential pressure readings across the filter/separator in the fuel transfer log so that supervisors can anticipate the need for cleaning.

541-4.5.2.4 Ships with Centrifugal Purifiers. Sample (see Table 541-10-2) all uncompensated storage tanks from which fuel will be drawn, and strip them, if necessary, before beginning the transfer operation. The transfer system is aligned to recirculate fuel back to the storage tank to allow the purifier and heater to reach steady-state operation.

541-4.5.2.4.1 Start the purifier. If the purifier fails to start, allow it to coast to a complete stop before trying to restart it. More information on purifiers is available in the purifier technical manual and in paragraph 541-9.15.

541-4.5.2.4.2 Start the transfer pump. Fuel is now flowing from the storage tank through the pump, heater, and purifier and back to the storage tank. The system preoperational integrity test described in paragraph 541-4.5.2.1 cannot be performed on systems with purifiers because the high back pressure established during the test would disturb the proper fuel flow through the purifier. Inspect the system for leaks, and immediately stop the pump if any leaks are found.

CAUTION

To prevent overheating, fuel must be flowing through the heater before power is applied or steam is admitted to the heater.

541-4.5.2.4.3 Start the heater, if required. If the heater heats fuel by steam (or hot water from the waste heat recirculating system on FFG 7 class), align the appropriate system valves. Check the discharge temperature.

541-4.5.2.4.4 When purifier discharge fuel samples are acceptable (see Table 541-10-2), realign the system to provide fuel to the service tank instead of recirculating to the storage tank.

541-4.5.2.4.5 The bowl of the Alfa-Laval self-cleaning purifier is periodically cleaned by a shoot cycle, described in paragraph 541-9.15.5.2. The sequence of events during a **shoot** cycle is mostly automatic. The operator initiates the semi-automatic **shoot** cycle. After a moment, the diverter valve upstream of the purifier redirects fuel flow back to the pump suction instead of into the purifier, and the purifier discharges solid contaminants from the bowl. The diverter valve automatically resumes supplying fuel to the purifier, and operation continues.

541-4.5.2.4.6 If the storage tank nears empty before the service tank is full, begin taking suction from another storage tank in addition to the first one. Avoid losing suction on the pump, because running the pump dry damages the pump internals. If the storage tank is seawater-compensated, emptying the tank of fuel will not lose suction but will deliver seawater to the transfer system.

541-4.5.2.4.7 When the service tank is full, the transfer system may be secured. On gas turbine ships the transfer system may be aligned to recirculate the service tank (see paragraph 541-6.2.4.2). Service tank recirculation continuously improves the service tank fuel quality and avoids frequent purifier starts and stops.

541-4.5.2.4.8 If the system is to be secured, align it to recirculate fuel to the storage tank. Shut down components in the reverse order from which they were started. Shut down power or steam to the heater first, to avoid having stagnant fuel in an operating heater. Then stop the transfer pump and, finally, the purifier. Close the valves after the pump is stopped, to avoid damaging the pump or lifting the relief valve.

541-4.6 FUELING OTHER SHIPS OR DEFUELING TANKS

541-4.6.1 REMOVING FUEL FROM STORAGE TANKS. Fuel being delivered to other ships is usually drawn from storage tanks rather than from service tanks. To fuel another ship or defuel a storage tank, the transfer pump takes suction from a storage tank and discharges to the deck connection.

541-4.6.2 REMOVING FUEL FROM SERVICE TANKS. On gas turbine ships the transfer pump can take suction from the service tanks through the service tank recirculation tailpipes and discharge through the transfer system deck connections. On steam and diesel ships, service tanks are usually defueled by the stripping system.

541-4.7 INTERFACES

541-4.7.1 SERVICE SYSTEM. The interfaces of the transfer system with the service system are discussed in paragraph 541-5.7.1.

541-4.7.2 STRIPPING SYSTEM. The interfaces of the transfer system with the stripping system are discussed in paragraph 541-6.4.2.

541-4.7.3 OILY WATER DRAIN COLLECTING SYSTEM. All fuel vents and drains are directed to the oily water drain collecting system. Vents often terminate at drip pans, and the drip pans drain to the oily water drain collecting system.

SECTION 5.

FUEL SERVICE SYSTEMS

541-5.1 INTRODUCTION

541-5.1.1 The fuel service system provides fuel from the service tanks to the ship's propulsion (boilers, gas turbines, or diesel engines) and other equipment. The service tanks are filled by the fuel transfer system (see Section 4). The service pump takes suction from a service tank and pumps the fuel through a strainer or filter to the propulsion end-user. Unneeded fuel returns to the service tank.

541-5.1.2 Service systems vary considerably among ships. Consult the Ship Information Book (SIB) or other technical manual for your ship. A ship often has two or more independent service systems, one for each main propulsion space. Each service system has two or more pumps installed in parallel, usually with multiple strainers or filters. Cross-connections allow various combinations of pumps and strainers or filters to be used together. This section does not attempt to describe all the types of service systems there are, but the basic principles described here apply to all of them.

541-5.1.3 Diesel generators, auxiliary boilers, and various other pieces of auxiliary equipment also receive fuel from service tanks. Some auxiliaries receive fuel from the same service tanks as propulsion; some have designated auxiliary service tanks. Service systems for auxiliary equipment vary widely but follow the same basic concepts as those for propulsion service systems.

541-5.1.4 This section briefly describes certain fueling operations, but fueling operations shall always be conducted according to the ship's Engineering Operational Sequencing System (EOSS) procedures .

541-5.2 GENERAL INFORMATION

541-5.2.1 FUEL RETURN. Piping arrangements for returning unneeded fuel to the service tanks depend on whether pumps are motor driven or turbine driven.

541-5.2.1.1 If the service pumps are driven by motors, a pressure-regulating valve controls the amount of fuel returned to the service tank on suction. This pressure-regulating valve is called the unloading valve. The unloading valve maintains a constant pressure downstream of the pump. Fuel must be returned to the service tank because motor-driven service pumps move a constant flow, regardless of what the end-user actually requires (see paragraph 541-9.11.2.1.1).

541-5.2.1.2 If the service pumps are turbine-driven, the turbine constant-pressure governor adjusts pump speed to maintain a constant fuel discharge pressure. In this case, an unloading valve is unnecessary. However, some pump models have a minimum flow requirement, so fuel return lines with orifices are provided. These return lines allow the pump to pass a minimum flow even when the boiler fuel demand drops to zero.

541-5.2.2 USE OF FUEL SERVICE TANKS. Equipment in a space is usually served by two fuel service tanks. Conventionally powered aircraft carriers have four service tanks per space, two for each boiler. Only one service tank is used at a time. The other tanks are called standby tanks. Use the online tank until it is 50 percent full; then put the standby tank on line. If for any reason the standby tank is not ready, a 50-percent reserve capacity is still available in the online tank. If boiler fire sputters or is lost when the standby tank is put on line, switch back to the original tank. The standby tank fuel is probably contaminated.

541-5.2.2.1 When the service tank in use is changed, fill the new standby tank. Fill the standby tank as soon as possible so the fuel has the maximum amount of time for contaminants to settle out or for service tank recirculation. Filling the standby tank immediately also ensures that it is ready for use if a problem develops with the fuel in the online tank.

541-5.2.2.2 Before putting a service tank on line, test the fuel in the tank in accordance with paragraph 541-10.8.4.

541-5.2.2.3 Align the fuel return to the online service tank. If fuel were returned to the standby service tank, the standby tank would overflow.

541-5.2.3 FLOWMETERS. Flowmeters are provided in fuel service systems during acceptance trials. Fuel service piping should contain a flanged spool piece that can be removed to install a meter. Flowmeters are being permanently installed on steam ships as part of the Navy's energy conservation program.

541-5.2.4 EMERGENCY SHUTDOWNS. Emergency cutout valves are provided on service tank suction lines, boiler front fuel lines, gas turbine fuel lines, and steam lines supplying turbine-driven service pumps. Motor-driven service pumps have remote shutdown pushbuttons. Guidance for using these emergency shutdown features is in Engineering Operational Casualty Control (EOCC) procedures and in NSTM Chapter 079, Volume 3, Engineering Casualty Control .

541-5.2.4.1 Service Tank Suction Emergency Cutout Valves. These valves can be actuated locally at the valves or remotely from the damage control deck. A service tank suction emergency cutout valve stops fuel flow into the system from the service tank.

541-5.2.4.1.1 Some ships have spring-actuated gate or globe valves, and some have remotely operated ball valves. For this purpose both valves are considered quick-acting valves. Some older ships have no service tank suction quick-acting valves but have service tank suction gate valves that can be operated from the damage control deck.

541-5.2.4.1.2 Closing or tripping the service tank suction emergency cutout valve is the surest way to stop a leak occurring anywhere in the system. It is especially important for leaks upstream of the service pumps, which could be fed by gravity flow from the service tanks even when the pumps are secured.

541-5.2.4.2 Boiler Front Quick-Closing Valves. These valves can be actuated locally at the boiler front upper and lower levels and remotely from either the enclosed operating station (EOS) or the boiler control station (BCS). A boiler front quick-closing valve shuts off all fuel into the valve's boiler.

541-5.2.4.2.1 Tripping the boiler front quick-closing valve stops the fuel flow into the boiler faster than shutting down the pump or closing the service tank suction emergency cutout valve. Boiler front quick-closing valves have no effect on leaks in the service system upstream of the boiler.

541-5.2.4.2.2 The boiler front quick-closing valve affects only one boiler. If there is a second online boiler in the space, it will continue to operate.

541-5.2.4.2.3 Do not rely on the boiler front quick-closing valve to stop leaks in fuel-return piping from the boiler. The fuel return from a second boiler or the service pump discharge may combine with the boiler fuel return, and could continue feeding the leak.

541-5.2.4.3 Gas Turbine Emergency Fuel Trip Valves. These valves are at the gas turbine enclosure. Propulsion gas turbines have quick-acting, electrically and remotely operated, normally open valves. They can be operated locally in the engine room and remotely from the central control station (CCS). The gas turbine generators have manual-pull trip valves that cannot be operated from the CCS. The emergency fuel trip valves shut off all fuel into the gas turbines.

541-5.2.4.3.1 Tripping the gas turbine emergency fuel trip valve stops fuel flow into the gas turbine faster than shutting down the pump or closing the service tank suction emergency cutout valve. Gas turbine emergency fuel trip valves have no effect on leaks in the service system upstream of the gas turbine.

541-5.2.4.3.2 The gas turbine emergency fuel trip valve affects only one gas turbine. If there is a second online gas turbine in the space, it will continue to operate.

541-5.2.4.3.3 Do not rely on the gas turbine emergency fuel trip valve to stop leaks in fuel-return piping from the gas turbine. The fuel return from a second gas turbine, the gravity feed head tank, or the service pump discharge may combine with the gas turbine fuel return, and could continue feeding the leak.

541-5.2.4.4 Service Pump Steam Line Quick-Closing Valves and Remote Shutdown Pushbuttons. Steam supply quick-closing valves cut off steam flow to turbine-driven service pumps, and remote shutdown pushbuttons stop motor-driven service pumps. Either kind of remote shutdown can be operated locally from the pump or remotely from the damage control deck and either the EOS or the BCS. After being tripped, a turbine-driven ser-

vice pump can deliver a significant amount of fuel, while the rotor coasts down. Closing a service tank suction emergency cutout valve or a boiler front quick-closing valve isolates the fuel source.

541-5.3 STEAM SHIP SERVICE SYSTEMS

541-5.3.1 GENERAL INFORMATION

541-5.3.1.1 Service Pumps. Steam ship service pumps are driven by either steam turbines or electric motors. At least two pumps are provided in each space.

541-5.3.1.1.1 Service pump turbine governors adjust steam flow to maintain a constant fuel pressure downstream of the pump. Service pump motors usually have two speeds to minimize the amount of fuel recirculated and the electric power consumed.

541-5.3.1.1.2 If the main service pumps are turbine-driven, an electric inport service pump of lower flow capacity is usually included. The inport pump is intended to supply fuel to a boiler while in port or for lighting off the first boiler in a space. Since the inport pump is electric, it can operate when steam is unavailable in the plant.

541-5.3.1.2 Strainers. Duplex strainers are used to clean the fuel in steam ship service systems. The duplex configuration provides for switching flow from a dirty basket to a clean basket, without interrupting the flow of fuel to the boiler. Strainers are discussed further in paragraph 541-9.12.

541-5.3.1.3 System Pressure. Discharge pressures from motor-driven service pumps are controlled by the unloading valve. Discharge pressures from turbine-driven service pumps are controlled by the turbine constant-pressure governor, which senses pressure in the fuel line downstream of the pump. Service pump discharge pressures are typically 350 lb/in^2 to 430 lb/in^2 . Pressure in the boiler fuel manifold is controlled by the boiler fuel control valve. The fuel control valve is controlled by the automatic boiler control system, where installed, or by manual operation by the burnerman when operated locally. Since the fuel control valve throttles fuel flow, pressure in the boiler fuel manifold is always less than or equal to the service pump discharge pressure.

541-5.3.2 OPERATION. Conduct all operations according to the ship's EOSS procedures.

541-5.3.2.1 System Startup. The startup of the fuel service system is part of the startup process for the whole steam plant. Startup consists of aligning the system, starting the service pump, and providing fuel to the boiler.

541-5.3.2.1.1 Align the service system valves to provide fuel to the selected boiler. Then align the recirculating line from the boiler to the online service tank (or on some ships the contaminated oil settling tank [COST]). Crack open the valve connecting the boiler fuel manifold with the recirculating line. This opening is needed to control the boiler fuel manifold pressure before the boiler is lighted off. The fuel control valve, like all control valves, cannot regulate pressure by throttling a dead-ended line. If the valve is opened too wide, however, enough pressure might not develop in the fuel manifold.

WARNING

Watch the online strainer for leakage when the service pump is started. Stop the pump immediately if the strainer leaks. Fuel leaks can cause fuel fires.

541-5.3.2.1.2 Start the selected fuel service pump. Operate two-speed electric service pumps at their lower speed, at least until the system has been inspected for leaks, to limit the flow through a major leak.

541-5.3.2.1.3 At this point, fuel is recirculating through two returns. Downstream of the service pump, some fuel is bled off through the unloading valve and returned to the online service tank to maintain the set pressure. The rest of the fuel passes through the strainer, the fuel control valve, the cracked-open fuel manifold recirculation valve, and then back to the service tank (or to the COST).

541-5.3.2.1.4 The system is inspected for leaks while the fuel is recirculating. Where possible, the system should be realigned to pressurize all parts of the system, even those supplying boilers that are secured. Inspecting for fuel leaks before light-off is more important on steam ships than on any other type ship. After light-off, many surfaces in a steam ship machinery space will become hot enough to ignite fuel.

541-5.3.2.1.5 If no leaks are found, the service system is ready for boiler light-off. The fuel manifold recirculation valve is closed when the first burner is lighted. Once fuel is flowing to a burner, recirculation is not needed for the fuel control valve to control pressure.

541-5.3.2.2 Continuing Operation. Observe the following guidelines for continuing fuel service operation on steam ships:

a. Check the strainer differential pressure frequently. If it rises above the limit for your ship, immediately switch baskets and backflush the basket that was in use. See paragraph 541-9.12 for more information.

b. As the required power levels change, the automatic boiler control system or the personnel controlling the boiler will adjust the fuel control valve to provide the required fuel flow. The fuel system unloading valve or the service pump turbine constant-pressure governor valve will automatically maintain system pressure as the flow changes. No adjustments to the service system are needed.

c. Periodically rotate service pump operation, to maintain equal wear on the pumps.

d. Bringing the second boiler in a space on line is similar to system startup except that the service tank piping is already aligned and the service pump is already running. Securing fuel service to a second boiler consists of shutting the system valves serving that boiler after the fires are extinguished.

541-5.3.2.3 Securing the System. The fuel manifold recirculation valve is cracked open when the last fire in the last boiler is extinguished. The service pump is secured, and then the system valves are closed.

541-5.4 DIESEL SHIP SERVICE SYSTEMS

541-5.4.1 GENERAL INFORMATION

541-5.4.1.1 Engine-Mounted Pump and Filter. A positive displacement pump with associated relief valve and a duplex filter system are typically furnished and mounted as part of the diesel engine. The duplex filter is usually mounted downstream of the engine-driven fuel pump, which supplies pressurized fuel to the engine injectors.

541-5.4.1.2 Service System Piping Components. The fuel service system piping on most diesel-propelled ships consists simply of supply and return lines running between the engines and the service tanks. Some installations include a suction strainer in the engine supply line. The return line may include a back-pressure regulator and should include a check valve to prevent backflow of fuel to a secured unit. Many diesel engine return lines include coolers, as discussed in paragraph 541-5.4.1.4.1.

541-5.4.1.3 System Pressure. During normal operation most system piping is at little more than atmospheric pressure. The piping from the service tank to the diesel engine is at the fuel pump's suction pressure. The fuel return piping discharges into the service tank at atmospheric pressure.

541-5.4.1.4 Fuel Returns. Diesel engines have provisions for returning unneeded fuel to the service tank. A relief valve is required at any cutout valve in the return piping to ensure that the piping is not inadvertently shut off. A relief valve is usually provided around the cutout valve to only one of the service tanks. (Even if the cutout valves to both service tanks were shut, the relief valve would pass fuel to its service tank, regardless of which service tank was on line.) Fuel returns from operating diesel engines to service tanks shall remain open. Blocking the fuel return could damage the engine .

541-5.4.1.4.1 Many diesel engine return lines include coolers that cool the fuel to approximately 110°F (43°C). Cooling the fuel ensures that fuel in the service tank does not become too warm for proper engine operation. Excessively warm fuel will not cool the injectors effectively and could begin vaporizing in the engine fuel system before reaching the injectors. In some cases, uncooled return fuel could even heat the service tank to 140°F (60°C), the flashpoint of F-76, causing hazardous vapors to issue from the tank vent. Engines with no coolers in the return lines have sufficiently long lines and large service tanks to prevent fuel from becoming too warm.

WARNING

The return line check valve does not provide adequate isolation for maintenance.

541-5.4.1.4.2 Diesel engines are usually maintained, including filter changeout, when all engines in the space are secured. If an engine has to be serviced while other engines in the space are operating, isolate the fuel lines to and from the engine being maintained in accordance with requirements in NSTM Chapter 505, Piping Systems. Do not rely on the return line check valve to isolate the engine.

541-5.4.2 OPERATION. Conduct all operations according to the ship's EOSS procedures.

541-5.4.2.1 System Startup. Align the fuel system before starting the diesel engine. Generally, no other action is necessary. If the engine has been secured for an extended period of time, however, or if maintenance on the fuel system has been conducted, the engine may have to be primed.

541-5.4.2.1.1 Service tanks are located so that fuel pump inlets are flooded when the tanks are full. Fuel will usually begin flowing when the engine is started.

541-5.4.2.1.2 Thoroughly inspect the fuel system for leaks as soon as possible after fuel begins flowing in the lines. Pay particular attention to the fuel lines on the engine itself. Fires have been started by fuel leaks spraying or dripping onto hot engine parts.

541-5.4.2.2 Continuing Operation. Observe the following guidelines for continuing fuel service operation on diesel ships:

a. Frequently check the differential pressure of the engine's attached duplex fuel filter. If it rises above the limit for your ship, immediately switch operation to the other filter element. Clean or replace the dirty element when the engine is next secured.
b. Before starting a second engine in the space, open the engine's suction cutout valves. No other action is required on the fuel system. Securing fuel service to an engine consists of shutting the system valves serving that engine after the engine has been stopped.

541-5.4.2.3 Securing the System. Various isolation valves in the fuel service system are closed after the engines in a space are secured. If the diesel is for an emergency generator, the engine systems (including fuel) should be aligned for automatic starting. No other fuel system action is required.

541-5.5 GAS TURBINE SHIP SERVICE SYSTEMS

541-5.5.1 GENERAL INFORMATION

541-5.5.1.1 Service Pumps. Pumps in the service system act as booster pumps, providing fuel at a positive pressure to the gas turbines. The gas turbines have their own attached fuel pumps that increase the fuel pressure to that needed for the combustors. Two motor-driven service pumps are typically provided. Each pump can supply the flow rate for all gas turbines operating at full power. Motors have two speeds to minimize the amount of fuel recirculated and the electric power consumed.

541-5.5.1.2 Heaters. A fuel heater, or two heaters in parallel, are installed downstream of the service pumps. Only one heater is used at a time. Heaters on some ships are electric, others use steam to heat the fuel, and the FFG 7 class uses hot water from the waste heat recirculating system. The heaters heat F-76 to reduce the fuel viscosity to that required by the propulsion gas turbines and to prevent the fuel from waxing. (Because of its lower viscosity and cloud point, JP-5 is not heated; instead, it is routed through a heater bypass valve.) Heaters include high-temperature alarms.

541-5.5.1.3 Filtration. Gas turbines have stringent fuel quality requirements. Filter/ separators are used to remove free water and fine particles from the fuel. The filter/separators are often preceded by prefilters, to reduce the rate of filter/separator element clogging. Filter/separators are covered in paragraph 541-9.13 and prefilters are covered in paragraph 541-9.14. Some ships have duplex prefilters and filter/separators so the elements in one

compartment can be cleaned or replaced without interrupting the flow of fuel to the gas turbines. Other ships have two simplex units installed in parallel, which also makes it unnecessary to shut down when elements are cleaned or replaced. Only one simplex unit is used at a time.

541-5.5.1.4 System Pressure. An unloading valve controls the discharge pressure from the service pumps. Service pump discharge pressures are typically about 55 psig.

541-5.5.2 OPERATION. Conduct all operations according to the ship EOSS procedures.

541-5.5.2.1 System Startup. The fuel service system is usually operating before a diesel generator or gas turbine in the space is started. Details of alignment vary, depending on whether a diesel generator, gas turbine generator, or propulsion gas turbine is to be started. The system is often already providing fuel to a diesel generator or gas turbine generator when the first propulsion gas turbine is started.

541-5.5.2.1.1 Gas turbine ship systems have significant central control. To operate the fuel system, personnel in the central control station, at a local control panel, and at the equipment, shall coordinate their actions. Overall coordination and control are from the central control station. EOSS procedures for each station describe personnel roles in operating the fuel system.

541-5.5.2.1.2 Startup consists of aligning the system for recirculation, starting the service pump, starting the fuel heater (if required), and aligning to provide fuel to the propulsion gas turbine module (GTM).

541-5.5.2.1.3 When the system is first aligned for recirculation, ensure that fuel returns from downstream of the fuel heater so that fuel will be flowing through the heater when the heater is started. Unloading valves in most systems are upstream of the heaters, so recirculated fuel would bypass the heater. If fuel heating is not required, align the system to pass fuel through the heater bypass rather than the heater.

WARNING

Watch the prefilter and filter/separator for leakage when the service pump is started. Stop the pump immediately if you see any leaks. Fuel leaks can start fuel fires.

541-5.5.2.1.4 Start the service pump at slow speed. Slow speed provides adequate fuel for startup and most ship operating modes. Thoroughly inspect the fuel system for leaks immediately after the pump is started, before any engines or gas turbines are started.

541-5.5.2.1.5 A diesel or gas turbine generator can be started at this point. If a generator is started, fuel will be flowing through the heater regardless of the recirculation path used.

CAUTION

To prevent overheating, fuel must be flowing through the heater before power is applied or steam (or hot water from the waste heat recirculating system on FFG 7 class) is admitted to the heater.

541-5.5.2.1.6 Start the heater, if required. If the heater is electric, energize it. If the heater is steam-heated or water-heated, align its system valves. Check the discharge temperature.

541-5.5.2.1.7 Open the GTM fuel supply valves and recirculation valves. The main fuel valve in the GTM remains closed until the GTM is ready for fuel. All fuel to the GTM recirculates back to the service pump suction (or to the service tank on FFG 7's and DDG 51's) until the GTM main fuel valve opens.

541-5.5.2.2 Continuing Operation. Observe the following guidelines for continuing fuel service operation on gas turbine ships:

a. Check the differential pressure across the prefilter and the filter/separator frequently. If a differential pressure rises above the limit for your ship, immediately switch to the other compartment or unit. Clean or replace elements in the compartment that experienced the high differential pressure. Refer to the Preventive Maintenance System (PMS) for more detailed element changeout requirements.
b. Duplex filter/separators automatically switch compartments when the differential pressure is too high. An indicator light on the unit shows that one compartment needs to be cleaned. Check for the indicator light periodically, so you don't overlook the dirty elements.
c. If both GTMs in a space are operating at high power levels, one service pump at slow will be unable to keep up with the fuel demand. If header pressure falls, the lead pump will automatically switch from slow to fast . On some ships, if this fails to restore header pressure, the standby pump will start in fast .
d. No operating mode requires more fuel than both pumps at fast can provide. If the header pressure is still low, there may be a major leak in the fuel system. For this reason, if the header pressure remains low with both pumps running at fast, both pumps will stop automatically.
e. Periodically rotate service pump operation to maintain equal wear on the pumps.

541-5.5.2.3 Securing the System. Steps taken to secure the system are the reverse of system startup: Close the fuel supply valve of the last gas turbine or diesel generator. Secure the heater and the service pump. Close the system valves.

541-5.6 LANDING CRAFT AIR CUSHION (LCAC) SERVICE SYSTEMS

541-5.6.1 GENERAL INFORMATION. Amphibious ships that carry air-cushion landing craft (landing craft air cushion, or LCAC) have separate service systems that supply fuel-to-deck connections for fueling the LCAC's. This section discusses service systems aboard ships used to fuel LCAC's, not fuel systems on the LCAC's themselves.

541-5.6.1.1 LCAC fuel is stored in dedicated LCAC service tanks. The LCAC fuel service system is similar to a simplified version of a gas turbine fuel service system. One of two service pumps takes suction from a service

tank and delivers the fuel to the deck connection through a simplex prefilter and a simplex filter/separator. An unloading valve controls service pump discharge pressure by returning unneeded fuel to the online service tank.

541-5.6.1.2 Control valves at the fueling stations control the flow rate to the LCAC. The fueling stations have hose flushing connections. The flushing connections return fuel to the ship's fuel fill piping, so flushed fuel can be returned to a storage tank.

541-5.6.2 OPERATION. Conduct all operations according to the ship's EOSS procedures.

1. Align the valves to draw fuel from the selected service tank using the selected service pump.
2. Align the selected control valve at the fueling station.
3. Start the pump.
4. Open the hose reel valve, allowing fuel to flow through the hose.
5. If the hose is being flushed, align the transfer system valves to allow the flushed fuel to enter a storage tank.

541-5.6.3 LSD 36 class ships are provided with a technical manual for interfacing with LCAC's. Refer to S9LSD-BC-GTP-010, Interface Manual for LSD 36 Class LCAC Handling and Support Services , for fuel system requirements and operating instructions.

541-5.7 INTERFACES

541-5.7.1 TRANSFER SYSTEM. The transfer system fills the service tanks. The service tanks are considered part of the service system.

541-5.7.1.1 In an emergency, service pumps on steam and gas turbine ships can take suction directly from the storage tanks, usually through the transfer system main. The connection to the transfer system is usually locked closed. Drawing fuel directly from the storage tanks increases the chances of drawing contaminated fuel, because the transfer system filtration is bypassed and there is no opportunity for fuel to settle or to be recirculated in the service tank.

541-5.7.1.2 The LCAC hose flushing connections deliver fuel to the transfer system's fill piping.

541-5.7.2 AVIATION JP-5 TRANSFER SYSTEM. On ships with a JP-5 system for fueling aircraft, the ship fuel service system can take suction from the JP-5 transfer system. This enables the service pumps to draw fuel directly from the JP-5 storage tanks in an emergency. The connection to the JP-5 transfer system is usually locked closed.

541-5.7.3 STRIPPING SYSTEM. Interfaces of the service system with the stripping system are discussed in paragraph 541-6.4.1.

541-5.7.4 OILY WATER DRAIN COLLECTING SYSTEM. All fuel vents and drains are directed to the oily water drain collecting system. Vents often end at drip pans, and the drip pans drain to the oily water drain collecting system.

SECTION 6.
FUEL STRIPPING SYSTEMS

541-6.1 INTRODUCTION

541-6.1.1 The fuel stripping system removes water and sediment from the bottoms of fuel tanks and also removes fuel from service system suction piping on steam ships. On steam and diesel ships stripping is an important step in making fuel clean enough for use in propulsion and auxiliary equipment.

541-6.1.2 Contaminated fuel in tanks or service system piping is usually stripped to the contaminated oil settling tank (COST). Water and most contaminants settle to the bottom of the COST. The stripping pump removes the contaminated fluid from the bottom of the COST and delivers it to the oily waste holding tank or overboard. The transfer pump draws usable fuel from a high tailpipe in the COST and delivers it to a storage tank or a service tank.

541-6.2 GENERAL INFORMATION

541-6.2.1 TAILPIPES. Stripping tailpipes are the lowest tailpipes in a tank. Stripping a tank can remove contaminants only down to the level of the stripping tailpipe, so it is important that transfer and service suctions be higher in the tank. Stripping tailpipes are 3/4 inch from the lowest point in the tank.

541-6.2.2 CONTAMINATED OIL SETTLING TANK. Contaminated fuel is pumped to the COST for two reasons:

a. Avoiding pollution . The overboard discharge of fuel is strictly controlled, especially when in port or near land. See NSTM Chapter 593, Pollution Control .

b. Reclaiming fuel . During stripping a significant amount of usable fuel is usually removed along with the water and contaminants. The high suction in the COST enables ships to recover and use this fuel after a period of settling, instead of wasting it. Reclaiming fuel improves a ship's overall fuel efficiency and minimizes the amount of waste fuel that must be disposed of.

541-6.2.2.1 Leave contaminated fuel in the COST as long as possible, to allow water and solid contaminants to settle out. Water separates slowly from F-76, especially when the ship motion agitates the tank. No solid contaminants that are less dense than fuel will settle out of the fuel, regardless of how long the fuel is left in the COST, but most solid contaminants are denser than fuel and will settle to the bottom of the tank.

541-6.2.2.2 Keep bilge fluid or any other fluid that may contain hydrocarbons other than ship's fuel (such as lubricating oils or other fuels) from entering the COST. Other hydrocarbons will not settle out in the COST.

NOTE

Do not reclaim fuel from any COST suspected of having fluids containing hydrocarbons other than ship's fuel.

541-6.2.3 COMPENSATED TANKS. Seawater-compensated storage tanks do not have low-point stripping tailpipes. The nature of seawater-compensated tanks makes it pointless to try to strip water from the bottoms of these tanks. (Seawater-compensated tanks are described in paragraph 541-3.5).

541-6.2.4 INTEGRATION WITH OTHER SYSTEMS

541-6.2.4.1 Stripping with Transfer System. Some ships lack a separate fuel stripping system. The transfer pump can be aligned to discharge to the COST and is used as a stripping pump. On such ships the transfer system tailpipes are 3/4 inch from the lowest point in the tank.

541-6.2.4.2 Service Tank Recirculation. Gas turbine ships strip water and solid contaminants from standby service tanks by recirculating the service tank contents. The transfer pump takes suction from the bottom of the service tank and recirculates the fuel through the transfer system centrifugal purifier. Instead of pumping the water and solid contaminants from the service tank to a COST, they are removed by multiple passes through the purifier. Service tank recirculation should begin as soon as a service tank is filled by the transfer system, and continue until fuel quality requirements are met.

541-6.2.4.3 Bilge Stripping. On all newer ships fuel stripping systems are separate from bilge stripping systems. Fuel stripping systems should not be used to strip bilges because of the additional contamination this could introduce to the fuel.

541-6.2.4.4 Ballasting and Deballasting. The stripping piping is often integrated with the ballasting and deballasting piping for storage tanks that can be ballasted. The stripping system can remove ballast water from storage tanks and pump it overboard.

541-6.3 OPERATION

541-6.3.1 Paragraph 541-10.8 describes when and how to sample and strip fuel tanks. Strip tanks when they fail to meet the fuel quality criteria in Table 541-10-2. Conduct stripping operations according to the ship EOSS procedures. The stripping operation consists of manually aligning the system and starting the stripping pump. Stripping is stopped when a fuel sample from the stripping pump meets the fuel quality requirements.

541-6.4 INTERFACES

541-6.4.1 SERVICE SYSTEM. The stripping system takes suction from the service tanks. On steam ships the stripping system can also take suction from the service pump suction piping through a locked-closed valve. On steam ships the discharges of the boiler fuel manifolds can be directed to a COST, enabling the service pumps to remove contaminated fuel at the boiler front.

541-6.4.2 TRANSFER SYSTEM. The stripping system takes suction from the storage tanks. The transfer pump can take suction from the high tailpipe in the COST to remove usable fuel. On some smaller ships with only one transfer pump, the stripping pump can be used as an emergency transfer pump.

541-6.4.3 OILY WATER DRAIN COLLECTING SYSTEM. The stripping pump can discharge to the oily waste holding tank. All fuel vents and drains, including those in the stripping system, are directed to the oily water drain collecting system, usually through a funnel.

SECTION 7.
CARGO OIL SYSTEMS

541-7.1 INTRODUCTION

541-7.1.1 FLEET OILER. The fleet oiler (Navy tanker) functions as a transporter and supplier of fuel. The cargo oil system on fleet oilers is arranged to receive fuel in bulk from shore or from ships alongside and to discharge it through a fueling hose to other ships alongside. Detailed instructions are provided in CINCLANTFLTINST/CINCPACFLTINST 4026.1, Fuel Management Afloat .

541-7.1.2 FOSS PROCEDURES. This section briefly describes certain fueling operations, but cargo fuel operations shall always be conducted according to the ship's Fuel Operational Sequencing System (FOSS) procedures, where provided . The FOSS consists of coordinated, standardized procedures and diagrams for operating the cargo fuel systems on fleet oilers.

541-7.1.3 CARGO OIL SYSTEM. Details of cargo oil systems vary, but for all newer ships the general configuration is standard. Tank piping arrangements and interconnections vary considerably. Cargo oil pumps on most ships can also take suction from the cargo oil or settling tank. Some ships have separate deck connections for receiving and discharging fuel. The cargo oil system has the following functions:

a. Filling cargo oil tanks. Fuel is received at the deck connections and flows to the cargo oil tanks through the suction/fill main. The cargo oil pumps are not used.

b. Providing fuel to other ships. One or more cargo oil pumps take suction from cargo oil tanks through either the suction/fill main or the suction main. The pumps discharge through either discharge main to the deck connections.

c. Transferring fuel between cargo oil tanks. A cargo oil pump takes suction from a cargo oil tank through the suction main. The pump discharges through either discharge main and through the suction/fill main to another cargo oil tank.

541-7.1.4 CARGO OIL STRIPPING SYSTEM. Cargo oil stripping systems vary widely among ships. Most ships have two cargo oil stripping pumps piped in parallel. The cargo oil stripping system has the following functions:

a. Stripping cargo oil tanks. A cargo oil stripping pump takes suction from a cargo oil tank and discharges to the cargo oil or settling tank or the contaminated cargo oil collecting tank.

b. Stripping the cargo oil or settling tank or the contaminated cargo oil collecting tank. A cargo oil stripping pump takes suction from the tank being stripped and discharges overboard, to the hose flushing main, the main deck connections, the cargo oil or settling tank, the contaminated cargo oil collecting tank, or the oily waste holding tank.

c. Stripping cargo oil system piping. A hose can be attached to a fitting in the pump suction line and connected to a cargo oil system low-point drain to remove residual ballast water from the piping. A cargo oil stripping pump takes suction from the low-point drain through the hose, and discharges to any of the destinations listed in (b) above.

d. Transferring remaining fuel between cargo oil tanks. Because stripping tailpipes are lower in the tanks than

cargo oil system tailpipes, the stripping system can remove fuel remaining in a cargo oil tank when the cargo oil system loses suction. A cargo oil stripping pump takes suction from a cargo oil tank and discharges to the cargo oil system, which must be aligned to direct the fuel to the receiving cargo oil tank.

541-7.1.5 CONTAMINATED CARGO OIL RECLAMATION SYSTEM. Newer tankers include a contaminated cargo oil reclamation system, which returns usable fuel from the contaminated cargo oil collecting tank to the cargo oil system. Contaminated fuel remaining in the contaminated cargo oil collecting tank is removed by the cargo oil stripping system.

541-7.1.5.1 Contaminated fuel in the contaminated cargo oil collecting tank is allowed to settle, so the water and fuel will separate. Tank level indicators (paragraph 541-9.6) show where the air/fuel and fuel/water interfaces are.

541-7.1.5.2 The cargo oil collecting tank has three tailpipes. The high tailpipe is 4 feet above the tank bottom, the midtailpipe is 18 inches above the tank bottom, and the low tailpipe is just above the tank bottom. Water is stripped from the cargo oil collecting tank through the bottom tailpipe. Usable fuel can be removed from the midtailpipe when the fuel/water interface is below it. Usable fuel can be removed from the high tailpipe when the tank is full enough and the fuel/water interface is below the high tailpipe. The high tailpipe is used when the fuel/water interface is above the midtailpipe because the water has not been stripped from the tank. The high tailpipe can also be used when the fuel/water interface is below the midtailpipe, because the best fuel (fuel with the least dissolved water) will always be obtained from the high tailpipe.

541-7.2 SAFETY

541-7.2.1 All personnel who operate or maintain any fuel system, including cargo oil systems, shall read and be familiar with Section 2. The number of safety precautions required during onloads or offloads is necessarily large. Refer to CINCLANTFLTINST/CINCPACFLTINST 4026.1 for guidance on safety precautions when onloading or off-loading fuel. Failure to comply with any one precaution may result in disaster.

541-7.3 GENERAL INFORMATION

541-7.3.1 CARGO OIL SYSTEM FLEXIBILITY. Newer Navy tankers have two suction mains and two discharge mains, which gives the cargo oil system great flexibility. The multiple mains enable the system to perform the functions discussed below.

541-7.3.1.1 Transfer Between Cargo Oil Tanks. Because of the two suction mains, the system can transfer fuel from any cargo oil tank to any other cargo tank, as described in paragraph 541-7.1.3.

541-7.3.1.2 Discharge Fuel to Two Ships Simultaneously. At least two cargo oil pumps are required for this operation. One is aligned to the suction/fill main and one of the discharge mains; the other is aligned to the suction main and the other discharge main. One discharge main is aligned to the port deck connections and the other to the starboard deck connections. The system can now discharge fuel independently to the port and starboard deck connections. This alignment allows independent control of pressure and flow to each receiving ship and maintains accountability for the fuel provided to each ship.

541-7.3.2 CARGO OIL SYSTEM FLOW RATES. Cargo oil pumps are typically centrifugal pumps of 3,000 gal/min capacity, although some pumps are rated as high as 6,000 gal/min. The flow rate of one 3,000-gal/min

cargo oil pump matches that of one standard deck connection on a receiving ship. Tailpipes in larger cargo oil tanks can pass 3,000 gal/min. Wing tank tailpipes are usually limited to 1,500 gal/min. All cargo oil tank tailpipes on AOE 6 class ships can pass 3,000 gal/min.

541-7.3.3 CARGO OIL SYSTEM PRESSURE REGULATION. The discharge pressure of motor-driven cargo oil pumps is regulated by two independent valves. Both recirculate excess discharge fuel to cargo oil pump suction. Power-operated throttling valves are installed between the discharge risers and the suction/fill and suction mains. Pressure-regulating valves are installed at each pump to recirculate flow directly from pump discharge to pump suction to maintain discharge pressure below 150 lb/in2.

541-7.3.3.1 To reduce the fuel delivery rate, crack open the power-operated recirculation valve and throttle the deck discharge valve. Allowing some fuel to recirculate through the recirculation valve rather than the pressure-regulating valve keeps the fuel temperature lower.

541-7.3.3.2 Steam-driven cargo oil pump discharge pressure is controlled by regulating steam flow to the pump turbine.

541-7.3.4 PRIMING CARGO OIL PUMPS. On many ships the cargo oil pumps are primed by the cargo oil stripping pumps. A cross-connection allows the stripping pumps to take suction from the cargo oil pump suction line or casing. Since the stripping pumps are positive displacement, they are able to prime themselves, pulling fuel into the cargo oil pumps in the process.

541-7.3.5 CARGO OIL STRIPPING TAILPIPES. Cargo oil stripping tailpipes are lower in the cargo oil tanks than cargo oil system tailpipes, so the stripping system will draw off water and contaminants below the cargo oil system suction. All cargo oil stripping tailpipes are located on the same side of all tanks served, either port or starboard. This arrangement allows more fuel to be drawn from the tanks when necessary by listing the ship toward whichever side is appropriate.

541-7.3.6 BALLASTING AND DEBALLASTING CARGO OIL TANKS. Cargo oil tanks are ballasted by opening the valve to the sea on the suction main. The tanks can also be ballasted and deballasted by the cargo oil pumps.

541-7.4 FUEL QUALITY

541-7.4.1 CARGO FUEL CONTAMINATION. Petroleum products become contaminated if mixed. Contamination of a fuel is defined as the presence of foreign matter or other petroleum products, resulting in failure of the fuel to meet specifications or use-limit tests (see MIL-HDBK-200, Quality Surveillance Handbook for Fuels, Lubricants, and Related Products) .

541-7.4.1.1 Investigate Suspected Contamination. Whenever a product fails to meet testing requirements, immediately investigate sampling procedures, cleanliness of sample containers and storage conditions, testing procedures, and cleanliness of all operations and equipment. Areas of possible contamination to consider are:

a. Dissolved water, which causes changes in fuel appearance with variations in ambient temperature because the water solubility in fuel changes as temperature changes. Cloud points have been observed with as little as 20°F (-11°C) of change. Test by heating fuel samples to the issue temperature; then use the free water visual test.

b. Leaks between tanks of different products, or from the sea through the hull.

c. Rust and sediment resulting from improper tank cleaning procedures and schedules.

d. Free water present in fuel (after stripping and water cuts indicate no free water on the bottom) may result from:

   1 Pump strainer not drained of retained water.

   2 Open valves.

   3 Insufficient flushing of, or condensation in, hose.

   4 Leaking valves in eductor system or between sea chest and pump.

   5 Residual water not drained from cargo oil piping after ballasting or deballasting the tanks.

541-7.4.1.1.1 Sediment content in line samples may fluctuate if rust scale flakes off the interior walls of ferrous piping. For this reason, a single line sample failing to meet the standards shall not be cause for rejection. Take at least three line samples (when pumping begins, after 5 minutes, and after 10 minutes of pumping), and analyze the samples using the contaminated fuel detector. Average the results. If they are above the standards, cease the transfer operation until the sediment content is reduced. If operations require, the receiving command may authorize the transfer operation to continue, but first take an all-levels sample or a composite of upper, middle, and lower samples from the receiving tanks and test it for sediment. If this sample fails to meet the standards, begin stripping procedures.

541-7.4.1.1.2 Microbiological growth in fuel is indicated by a slimy, gelatinous substance in the product, usually at an interface of fuel and unremoved water. Proper stripping procedures and frequent turnover of the cargo load can eliminate or minimize problems with this type of contamination.

541-7.4.1.2 Procedure for Reporting Contamination. A message report shall be prepared for any fuel that is contaminated, suspected of being contaminated, or believed to be off-specification.

1. Draw several tank samples at different levels to submit to the nearest petroleum testing laboratory for analysis.

2. Isolate the product until after analysis. When possible, discharge the product to isolated storage ashore while awaiting authorization for use or disposition.

3. Submit a Contaminated Fuel Report to the cognizant Operational Officer, with informational copies and including all information, as directed by CINCLANTFLTINST/CINCPACFLTINST 4026.1.

541-7.4.2 FUEL QUALITY TESTS. Tests that are beyond the capability of the oiler or those required for verification are usually run in laboratories ashore or at refineries and points of fleet issue. Fleet oiler personnel shall be familiar with the significance of test results. Because of the small volume of a product tested, any traces of dirt or residue from a previous sample or test that remain in the collection or test container will significantly change the test results. All bottles or other vessels used for collecting samples, including lids, caps, corks, and all test equipment, shall be scrupulously clean . Oiler personnel are responsible for the tests listed below, except the flashpoint, which is the responsibility of the receiver (if equipped):

a. API/Specific Gravity. API/specific gravity deviations will indicate any stratification or variation of a product in a tank. API/specific gravity also indicates possible contamination with a heavier or a lighter product. This test is described in paragraph 541-10.9.2.7.

b. Bottom sediment and water (BS & W). The BS & W test indicates contamination by foreign substances. Fleet oilers are equipped to perform the BS & W test by the centrifuge method (paragraph 541-10.9.2.2).

c. Flashpoint. A flashpoint substantially lower than expected is a reliable indication of contamination by a highly volatile product such as gasoline. The flashpoint test is described in paragraph 541-10.9.2.6.

d. Color. The color of fuel is subject to change with age, but this is not detrimental to quality. Other color changes, however, may indicate pollution. When the fuel color at the time of the test is darker than the color reported at the time of receipt, a laboratory shall determine if the fuel is contaminated.

541-7.5 OPERATION

541-7.5.1 Cargo oil operations and cargo tank cleaning are covered in detail in CINCLANTFLTINST/ CINCPACFLTINST 4026.1.

541-7.6 INTERFACES

541-7.6.1 FUEL TRANSFER SYSTEM. Cargo fuel can be provided to the oiler's own fuel transfer system.

541-7.6.2 CARGO JP-5 SYSTEM.

CAUTION

If F-76 is put in cargo JP-5 tanks, the tanks shall be cleaned according to PMS before refilling with JP-5 for use in aircraft.

The cargo oil and cargo JP-5 systems are usually separate, but some tanks can be used for either cargo fuel or cargo JP-5. Separate tailpipes are provided for each tank that is convertible. When the tank is full of JP-5, the cargo oil and cargo oil stripping tailpipes are removed and blanked off. When the tank is used for cargo fuel, the cargo JP-5 and cargo JP-5 stripping tailpipes are removed and blanked off.

SECTION 8.
FUEL SYSTEM MAINTENANCE

541-8.1 MAINTENANCE AND SAFETY

541-8.1.1 Good fuel system maintenance is essential, both for supporting the ship's mission and for ship safety. Allowing fuel systems to fall into poor condition has resulted in fuel leaks and fires. Leaks and fires have also been caused by mistakes made while performing maintenance. Supervisors must carefully select, train, and supervise those who perform fuel system maintenance. Making sure fuel system maintenance is timely, thorough, and error-free is the most important thing that can be done to prevent fuel fires.

541-8.1.2 The personal safety of those who perform maintenance is also extremely important. All personnel who perform or supervise fuel system maintenance shall be familiar with Section 2 and OPNAVINST 5100 series, Safety for Forces Afloat .

541-8.1.3 Refer to Type Commander Quality Assurance Manuals for further maintenance and repair guidance on fuel systems and components. A repair to a fuel system is now frequently designated as a level A repair, requiring a Controlled Work Package (CWP) and submission of Departure From Specifications (DFS) when the CWP cannot be fully complied with. Consult the Type Commander Quality Assurance Manual for details.

541-8.2 PREVENTIVE MAINTENANCE

541-8.2.1 PLANNED MAINTENANCE SYSTEM. The primary source for required preventive maintenance is the Planned Maintenance System (PMS). If necessary maintenance actions are not covered or the coverage is inadequate, submit a Technical Feedback Report (TFBR), OPNAV form 4700/7, so action can be initiated to correct the PMS.

541-8.2.2 OTHER SOURCES OF PREVENTIVE MAINTENANCE ACTIONS. Preventive maintenance actions may also be required by NAVSEA or NAVSSES advisories, Type Commander instructions, or NSTM chapters.

541-8.2.3 ENGINEERING OPERATIONAL SEQUENCING SYSTEM. Engineering Operational Sequencing System (EOSS) procedures cover operation rather than maintenance but also include some maintenance checks and tests that the operator typically performs. Preventive maintenance actions in EOSS procedures include pre-operational system integrity tests, checking strainer or filter differential pressure, and others. EOSS procedures tell the operator how to verify that the system is in good condition before and during operation. If the EOSS check or test indicates a problem, consult the appropriate maintenance requirement card (MRC) or technical manual for further instructions.

541-8.2.4 PERIODIC PRESSURE TESTS. Fuel systems are periodically hydrostatically tested to 135 percent of system design pressure. Hydrostatic tests are performed with water to eliminate the risk of fire if the system leaks. Hydrostatic tests are covered in NSTM Chapter 505, Piping Systems .

541-8.2.4.1 **NSTM Chapter 505** , and PMS on many ships, require fuel systems to be periodically inspected for leaks during operation. This procedure is performed more often than hydrostatic tests because it requires no external equipment nor filling the system with water. As much of the system as possible should be operating when the inspection is performed.

541-8.2.4.2 Pressure tests determine only whether the system is leaking at the moment the test is performed. They do not guarantee the absence of leaks for any period of time. Hydrostatic tests do not establish that the pipe wall is heavy enough for the intended service. The wall thickness inspection and acceptance criteria given in **NSTM Chapter 505** shall be used to evaluate piping wall thickness.

541-8.2.4.3 Do not rely on periodic pressure tests to prevent fuel leaks and fires. If a leak is going to cause a fire, the fire usually breaks out within minutes, sometimes even seconds, of when the fuel first leaked. All personnel shall always be alert for the odor of fuel or for visual evidence of fuel leaks.

541-8.3 CORRECTIVE MAINTENANCE

541-8.3.1 SOURCES OF INFORMATION. Corrective maintenance instructions for most components are included in the components' technical manuals. Some corrective maintenance guidance for piping and valves is

included in **NSTM Chapter 505** . Considerable maintenance information is included in formal training documentation, such as Naval Education and Training Command (NAVEDTRA) rate training manuals.

541-8.3.2 ON-THE-JOB TRAINING. Many basic maintenance skills, such as repairing valves and making up flanged joints, are learned through on-the-job training. Personnel who are learning on the job while performing fuel system maintenance must be properly supervised and their work carefully checked. Maintenance errors have caused fuel leaks and fires. If you are unsure how to do a job correctly, ask your supervisor or look it up in the appropriate manual.

541-8.3.3 ISOLATION FOR MAINTENANCE. Fuel systems shall be secured before performing corrective maintenance. The pressure boundary of an operating fuel system shall not be broken except for extraordinary situations. The Commanding Officer's permission is usually required for single-valve isolation of a pressurized fuel system. Isolate and tag-out the portion to be repaired, and observe all precautions in accordance with **NSTM Chapter 505** . Take all precautions for foreign material exclusion, and maintain all other cleanliness standards for fuel systems. Break system joints carefully, in case the isolation valves are leaking by and there is pressure in the line. If the system is started after being opened for maintenance, watch the isolation valves and be prepared to stop the pump if the valves leak: even two-valve isolation can leak.

541-8.4 ACTIONS REQUIRED AFTER MAINTENANCE

541-8.4.1 HYDROSTATIC TEST. If the pressure boundary of the system has been opened and then reclosed, a hydrostatic test is often required on the affected portion of the system. **NSTM Chapter 505** gives requirements and instructions for hydrostatic testing. Hydrostatic testing verifies that the system is not leaking and is capable of containing pressure. Hydrostatic tests do not guarantee that the system is in good material condition or will not leak in the future. When unable to conduct a required hydrostatic test or additional NDT with test option per **NSTM Chapter 505** or tightness test option for low energy system per **NSTM Chapter 505** , an approved DFS is necessary before operating the system.

541-8.4.2 OPERATIONAL PRESSURE TEST. Hydrostatic testing after repairs is not always required. **NSTM Chapter 505** lists minor ship's force repairs for which an operational pressure test is satisfactory, and also provides guidance on operational testing.

541-8.4.2.1 An operational pressure test consists of watching the repaired portion of the system for leaks when the system pump first pressurizes it. Watch the affected portion of the system the moment the pump is started and be prepared to fight a class B fire. If it is impossible to see the affected portion from the pump controls, have someone watch the affected portion while in communication with the pump operator. Fuel leaks can cause fires very quickly. Do not simply start the pump and then go look at the affected portion of the system. Stop the pump immediately if any leakage is detected.

541-8.4.2.2 If possible, perform the operational pressure test immediately after repairs are completed, rather than waiting until system operation is required. If leaks occur, allow time to repair them without affecting the ship schedule.

541-8.4.2.3 If possible, perform the operational pressure test when the space is at cold iron. Fuel leaks are far less likely to cause fires if the number of hot surfaces nearby is minimized.

541-8.4.3 SYSTEM FLUSHING. During ship overhaul, modernization, or extended lay-up, foreign materials may be introduced into fuel piping systems. If portions of the system are drained, internal carbon steel piping corrosion may also generate contaminants in the system. These contaminants could cause accelerated wear of pumps, boilers, diesel engines, or gas turbines. Excessive contamination can also overburden system strainers, filters, and purifiers. Before system lightoff, flush the system to remove industrial contaminants and free any loose scale. Guidance on flushing is given in paragraphs 541-8.4.3.1, 541-8.4.3.2, and 541-8.4.3.3. Tailor the actual procedures as necessary for the ship and system conditions. Carbon steel piping systems, for example, may require more flushing than stainless steel or copper-nickel systems because of greater internal corrosion.

541-8.4.3.1 Transfer System Flushing

1. Fill a forward or aft storage tank with F-76 or JP-5, which will be used as the flushing fluid.
2. If system pumps are to be used to circulate the flushing fluid, install temporary suction strainers to protect the pumps. Portable pumps may be used instead of system pumps. Use the maximum flow rate possible without exceeding the system pressure rating.
3. Use system strainers to filter the flushing fluid being returned to a selected tank. If the system lacks a strainer, install a temporary simplex strainer in the flush discharge piping to the tank. Install a muslin or nylon bag in the system strainer or temporary strainer to obtain finer filtration.
4. Install jumper hoses around all centrifugal purifiers, filter/separators, heaters, and inactive pumps. Be prepared to stop the flushing pump if one of the hoses leaks when the system is pressurized.
5. Align the system to circulate the fluid through as much of the system as possible. Where possible, align the system to circulate through a forward-and-aft loop. If such looping is not possible, flush by alternately pumping the fluid forward, then aft, through the system mains. If necessary, realign the system during the flushing to flush various branches.
6. During flushing, periodically vibrate the system piping, especially near welded joints, by striking it with a wooden mallet or equivalent means. Do not use sharp instruments that may damage the piping or cause a leak. This vibration should dislodge internal scale and welding slag.
7. Flush the system for a minimum of 24 hours and until the muslin or nylon bags in the strainers show no appreciable contamination for two consecutive hours.
8. When flushing is completed, transfer the flushing fluid to a contaminated oil settling tank (COST) or an empty storage tank, so the fuel can settle and be reclaimed for future use. The flushing fluid shall discharge into the tank through a strainer having 4-mil openings. If no such strainer is available in the system, install a temporary strainer before transferring the flushing fluid.
9. Open and clean any system strainers through which the flushing fluid passed.
10. Remove all jumper hoses and temporary strainers, and return the system to its original configuration. Run an operational pressure test at the first opportunity to be sure that all system connections have been remade correctly (see paragraph 541-8.4.2).

541-8.4.3.2 Service System Flushing

1. Clean all service tanks. Fill a service tank with F-76 or JP-5, which will be used as the flushing fluid.
2. If system pumps are to be used for circulating the flushing fluid, install temporary suction strainers to protect the pumps. Portable pumps may be used instead of system pumps. Use the maximum flow rate possible without exceeding the system's pressure rating.

3. On ships with steam-turbine-driven fuel service pumps, use a transfer or portable pump to flush through the emergency transfer connection. If using a transfer pump, install a temporary suction strainer to protect the pump.

4. For flushing on diesel ships, use the standby fuel service pump or a portable pump.

5. Install jumper hoses around all prefilters, filter/separators, heaters, boilers, diesel engines, gas turbines, and inactive pumps. Be prepared to stop the flushing pump if one of the hoses leaks when the system is pressurized.

6. Remove pressure-regulating valves from the system and install spool pieces.

7. Use system strainers to filter the flushing fluid being returned to a selected tank. If the system has no strainer, install a temporary simplex strainer in the flush discharge piping to the tank. Install a muslin or nylon bag in the system strainer (if practical) or temporary strainer to obtain finer filtration.

8. Align the system to circulate the fluid through as much of the system as possible. If necessary, realign the system during the flushing to flush various branches.

9. During flushing, periodically vibrate the system piping, especially near welded joints, by striking it with a wooden mallet or the equivalent. Do not use sharp instruments that may damage the piping or cause a leak. This vibration should dislodge internal scale and welding slag.

10. Flush the system for a minimum of 24 hours and until the muslin or nylon bags in the strainers show no appreciable contamination for two consecutive hours.

11. When flushing is completed, transfer the flushing fluid to a COST or an empty storage tank so the fuel can settle and be reclaimed for future use. The flushing fluid shall discharge into the tank through a strainer having 4-mil openings. If no such strainer is available in the system, install a temporary strainer before transferring the flushing fluid.

12. Open and clean any system strainers through which the flushing fluid passed. Remove any muslin or nylon bags installed in system strainers.

13. Remove all jumper hoses and temporary strainers, reinstall pressure-regulating valves, and return the system to its original configuration. Run an operational pressure test at the first opportunity, to ensure that all system connections have been remade correctly (see paragraph 541-8.4.2).

541-8.4.3.3 Stripping System Flushing. Flushing is generally not required for stripping systems, since they routinely carry contaminated fluid anyway. If industrial activity has left a stripping system particularly contaminated, it can be flushed similarly to the transfer system (see paragraph 541-8.4.3.1).

SECTION 9.

FUEL SYSTEM COMPONENTS

541-9.1 INTRODUCTION

541-9.1.1 This section covers components used in shipboard fuel systems. Detailed descriptions and maintenance requirements are available in component technical manuals. Required preventive maintenance is also included in the ship's Preventive Maintenance System (PMS). PMS takes precedence over all other sources.

541-9.2 TANKS

541-9.2.1 TAILPIPES. Fuel systems take suction from tanks and discharge into tanks through tailpipes. Tailpipes in uncompensated tanks are arranged so that different systems take suction from the tank at different levels. The stripping system takes suction from the bottom of the tank, to ensure that it draws off water and particles that settle to the bottom of the tank. The transfer system takes suction above the stripping tailpipes. The service system takes suction from higher in the service tanks.

541-9.2.2 TANK COATINGS. Fuel tanks are coated to prevent corrosion, although tanks on some older ships may be uncoated. Preventing corrosion helps maintain fuel quality by avoiding rust particles in the fuel. This is especially important with the stringent fuel quality requirements of gas turbine ships. Preventing corrosion also avoids long-term structural damage to the tank. Requirements for fuel tank coatings are covered in Naval Ship's Technical Manual (NSTM) Chapter 631, Preservation of Ships in Service (Surface Preparation and Painting) .

541-9.2.3 TANK INSPECTION AND CLEANING. Inspect and clean fuel tanks as PMS directs. Maintain records of inspections, tests, and cleanings as the Maintenance and Material Management (3-M) System requires. Perform a complete tank inspection whenever a tank is cleaned and made safe for personnel for any reason. Some older steam ships may still have tank heating coils in fuel tanks. SHIPALT's have been issued to remove the heating coils from the tanks.

541-9.3 TANK OVERFLOWS

541-9.3.1 DESCRIPTION. Uncompensated fuel tanks have overflow pipes that run from the tank to either an overflow tank or overboard. The overflow pipe provides an escape path for fuel so the tank does not rupture if it is overfilled. Tanks that overflow directly overboard have high-level alarms (see paragraph 541-9.6.2.1).

541-9.3.1.1 Compensated fuel tank groups only have an overflow from the seawater expansion tank. Since the individual tanks have no overflows, there is a danger of overpressurizing the tanks during filling if design fill rates for the tank group are exceeded. Filling rates shall be closely controlled. Compensated fuel storage systems and their filling rate limitations are described in paragraph 541-3.5.

541-9.3.1.2 For non-compensated fuel tanks, individual tank overflows typically lead to one overflow tank. The overflow tank is usually also used as a storage tank. During fueling, overflow tanks are filled after all the storage tanks they serve are full. Overflow tanks have overflow pipes that discharge overboard.

541-9.3.1.3 When overflow pipes from individual tanks are combined, a check valve is installed in the line from each tank. The check valves prevent overflow fuel from entering any tank other than the overflow tank. Overflow pipes that discharge overboard have check valves to prevent water from entering the tanks through the overflow line.

541-9.3.2 MAINTENANCE. Overflow pipes are included in the piping maintenance requirements covered in paragraph 541-9.9.4. Improper operation of overflow check valves may subject the tanks to excessive pressure and cause serious tank damage. Maintain the check valves according to the following guidelines:

a. The check valves are covered by standard valve PMS.

b. All check valves that can be accessed without entering tanks should be inspected and cleaned according to PMS frequency requirements.

c. Any check valves that are inaccessible without entering tanks should be inspected and cleaned during tank cleaning.

541-9.4 TANK VENTS

541-9.4.1 DESCRIPTION. Vent pipes run from the topmost points of fuel tanks to the weather decks. They allow air to exit and enter as noncompensated tanks are filled and emptied, and as fuel expands and contracts with temperature changes. Compensated tanks have valved vent connections on the top of each tank. The vents are for releasing trapped air while the tanks are filling with water following tank cleaning. Fuel tank vent outlets have removable screens. The screens have an inner 40-mesh wire screen and an outer wire screen of either 1/4-inch or 1/2-inch mesh.

541-9.4.2 MAINTENANCE. Inspect and clean vent screens in accordance with PMS requirements. Replace screens that are damaged or cannot be cleaned. Inspect screens after painting has been done near the vent terminal, to make sure the screen is not coated with paint. Clogged screens interfere with tank venting.

541-9.5 TANK SOUNDING TUBES

541-9.5.1 DESCRIPTION. A sounding tube extends from near the bottom of a tank, through its top, and up to some space where it is convenient to access the tube. Sounding tubes are used for determining fuel or water level and for taking fuel samples. Sounding tubes are not installed in compensated tanks because the tanks are under pressure.

541-9.5.1.1 One-half inch holes are drilled through fuel tank sounding tubes approximately every 6 inches along their length, to ensure that samples taken from the sounding tube are representative of the fuel in the tank.

541-9.5.1.2 Some fuel tank sounding tubes enter the side of the tank near the tank bottom. Samples taken from these tubes might not be representative of the fuel in the tank; line samples, therefore, are taken rather than sounding tube samples.

541-9.5.2 SOUNDING TUBE CLOSURE

WARNING

Keep sounding tube valves closed and caps installed when the sounding tube is not in use.

541-9.5.2.1 Sounding tubes are closed by a cap that screws on the top of the tube. Keeping sounding tubes closed prevents fuel from spilling from the sounding tube if the tank overflows, prevents fuel vapors from escaping into the ship, and keeps foreign objects out of the fuel tanks.

541-9.5.2.2 Gate valves are installed at the terminals of sounding tubes that terminate below the full-load waterline and serve tanks having at least one boundary exposed to the sea. The valves prevent internal flooding of the ship if the tank boundary exposed to the sea is damaged.

541-9.5.3 FLOATING-BALL CHECK VALVES. Fires have been caused by fuel that spills from sounding tubes and contacts hot surfaces. Consequently, floating-ball check valves (National Stock Number (NSN) 4820-01-258-3954) are required on sounding tubes that terminate in spaces listed in paragraph 541-9.5.3.2.

541-9.5.3.1 Description. A section through a floating-ball check valve is shown in Figure 541-9-1. The check valves have a ball that floats on the rising fuel and stops flow from the tube. In normal use, the ball rolls to one side on a track, to avoid interfering with sampling and sounding.

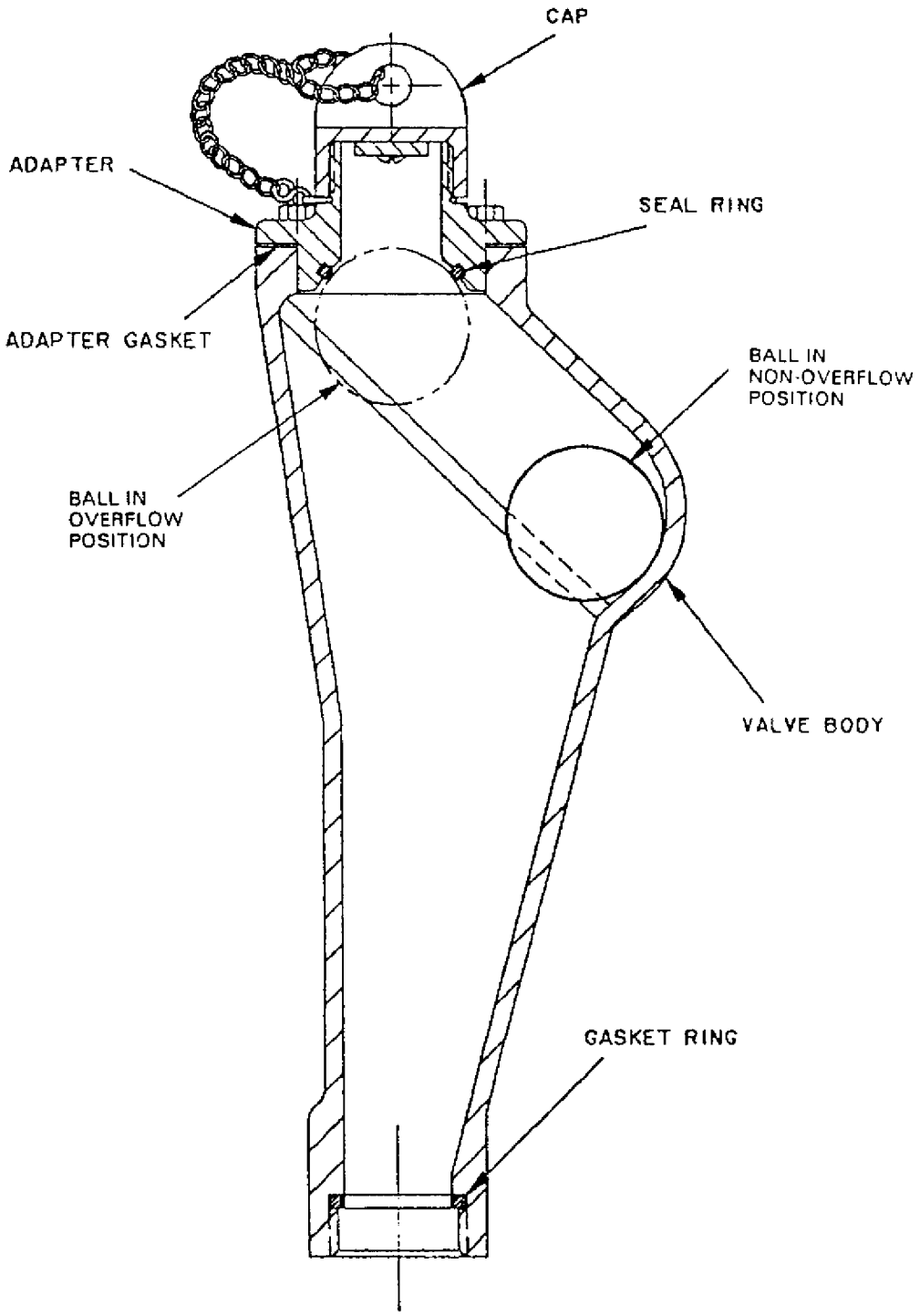

Figure 541-9-1 Floating-Ball Check Valve (Sectional View)

541-9.5.3.2 Installation Requirements. Floating-ball check valves are required in F-76, JP-5, and oily waste sounding tubes that terminate in the following locations:

a. Main and auxiliary machinery spaces.

b. Spaces containing diesel-driven or turbine-driven generators or pumps, oil-fired boilers, or incinerators.

c. Spaces dedicated to electrical or electronic equipment.

d. Spaces with carpeted decks.

541-9.5.3.2.1 Floating-ball check valves are required for sounding tubes terminating in the locations covered above, regardless of the kind of closure already installed in the sounding tube. Floating-ball check valves are to be added to, rather than to replace, existing closure devices such as gate valves, ball valves, and spring-loaded gate valves.

541-9.5.3.2.2 If a required floating-ball check valve would create a deck obstruction, install the valve below the deck.

541-9.5.3.3 Tanks do not require sounding-tube floating-ball check valves if the tank is filled only through a funnel drain and the highest point of the tank overflow is below the top of the sounding tube. Floating-ball check valves are not required in passageways or in living spaces without carpeted decks.

541-9.5.4 OPERATION

541-9.5.4.1 Determining Tank Fuel Level. Determining the level of liquid in a tank by using a sounding tube is called sounding the tank. Details on tank sounding are given in NSTM Chapter 504, Pressure, Temperature, and Other Mechanical and Electromechanical Measuring Instruments, and various Naval Education and Training Command (NAVEDTRA) rate training manuals.

541-9.5.4.1.1 Determining where the liquid level is on the sounding rule or tape is sometimes difficult. The level can be found more easily by applying a thin coat of fuel-indicating paste (NSN 6850-00-270-5526) to the rule or tape before inserting the rule or tape in the sounding tube. Fuel reacts with the paste, causing the paste to change color. A thin coating of lubricating oil on the rule or tape can also help find the fuel level.

541-9.5.4.1.2 Another way to determine fuel level is to drill 1/8-inch or smaller holes about every inch along the length of the sounding tape. When the tape is removed from the sounding tube, fuel remains in the holes that were below the fuel level.

541-9.5.4.1.3 After determining the fuel level by sounding the tank, the volume of fuel can be calculated from the ship's tank-sounding tables.

541-9.5.4.2 Sampling. Sounding tubes are also used to sample tank contents with fuel thief samplers (paragraph 541-10.7.3.1) to test for quality of fuel, or to test for water at the bottom of a fuel tank (paragraph 541-10.7.3.2).

541-9.6 TANK LEVEL-INDICATING SYSTEMS

541-9.6.1 DESCRIPTION. Tank level-indicating (TLI) systems show the volume or weight of fuel in tanks. Two basic types of remote-reading level-indicating systems are used for fuel tanks: the static head type (NAVSEA drawing 810-1385897) and the electric type (MIL-L-23886). More detail on these and other systems is available

in **NSTM Chapter 504** . The magnetic float electric level-indicating system is covered in detail in technical manuals 0965-LP-060-1010, GEMS Tank Level Indicating (TLI) System, and 0987-LP-021-4010, **GEMS Tank Level Gauging System** .

541-9.6.2 GENERAL INFORMATION

541-9.6.2.1 High-Level Alarms. Magnetic float level-indicating systems in tanks that overflow directly overboard have integral high-level alarms. The alarm is not actuated by a separate switch or sensor. Instead, the alarm level is programmed into the electronic control unit for the indicator (called the receiver), so the receiver will recognize a high-level condition and actuate the alarm. The high-level alarms sound when the tank has reached between 95 and 98 percent of its total capacity. The alarm point is intended to provide about a 2-minute warning that the tank will overflow unless tank filling is stopped immediately. The alarm point is set above 95 percent full to prevent alarms from sounding during normal tank filling.

541-9.6.2.2 Low-Level Alarms. Magnetic float level-indicating systems in service tanks have integral low-level alarms. Like the high-level alarms, the alarm level is programmed into the receiver for the tank. The low-level alarm warns operators that suction will soon be lost but gives them adequate time to switch to the other service tank. Since service tanks are usually drawn down only to 50 percent of capacity, low-level alarms will not actuate in normal operations.

541-9.6.2.3 Magnetic Level-Indicating Systems in Compensated Tanks. In compensated tanks the magnetic float is designed to float in seawater but sink in fuel, so it floats at the fuel/water interface in the tank.

541-9.6.2.3.1 Since the fuel is on top of the seawater in a compensated tank, the operation of the transmitter is reversed. The receiver reads full when the float is at the bottom of the tank and empty when the float is at the top.

541-9.6.2.3.2 The fuel/water interface in a compensated tank is not a clear-cut plane, so the level readings are inexact. Filling compensated tanks too quickly causes the fuel/water interface to blur more severely, reducing the accuracy of the TLI's during fueling.

541-9.6.2.4 Magnetic Level-Indicating Systems in Contaminated Oil Settling Tanks. Fuel/water interface magnetic floats are also used in contaminated oil settling tanks (COST) to determine the amount of fuel in the tank. The amount of seawater in the bottom of the tank, found by the fuel/water interface float, is subtracted from the total volume of liquid in the tank, found by a normal fuel float on a separate transmitter.

541-9.6.2.5 Epoxy Coatings. Tank-level indicators in compensated fuel tanks and fuel tanks that can be ballasted are coated with epoxy. The coating prevents the indicator from fouling. The fouling problem was especially severe in coated tanks because contaminants were generally deposited on the bare metal surface of uncoated indicators in preference to the coated tank walls.

541-9.7 TANK SIGHT GLASSES

541-9.7.1 GENERAL. Some smaller fuel tanks have sight glasses installed instead of TLI systems. Sight glasses may be direct-reading, indirect-reading, or part of a cleavage indicating system.

541-9.7.2 DIRECT-READING SIGHT GLASSES

CAUTION

Keep cutout valves on direct reading sight glasses closed except when taking readings, to prevent fuel leakage if the sight glass is broken.

A direct-reading sight glass is a vertical glass tube outside a fuel tank that is piped into the tank at the top and bottom. The fuel level in the tank shows directly in the glass tube. An instruction plate is required at each tank cautioning personnel to keep the sight glass cutout valves closed except when taking readings.

541-9.7.3 INDIRECT-READING SIGHT GLASSES. GEMS Sure-Sight indirect-reading sight glasses are installed on many small fuel tanks on newer ships. Indirect-reading sight glasses serve the same function as direct-reading sight glasses, but without the risk of glass breakage and resulting leakage. A vertical pipe with a magnetic float is attached outside a fuel tank and piped into the tank at the top and bottom. The float rides on the surface of the fuel. The magnet in the float raises small flags outside the pipe to indicate the fuel level.

541-9.7.4 CLEAVAGE INDICATING SYSTEM. The COST's on some older ships have a visual cleavage-indicating system for determining where the fuel/water interface is. A hand pump is piped to take suction from any of various tailpipes at different heights in the tank. The pumped fuel passes through a sight glass and returns to the tank. The operator pumps liquid from different tailpipes and determines visually whether the liquid is fuel or water at each height. Liquid samples can be taken from each level as well.

541-9.8 TANK ACCESS COVERS

541-9.8.1 GENERAL. Proper installation of tank covers is essential for the safety of the ship. Fuel leaks from tank access covers historically have been common. Although such leaks are usually far from ignition sources, some major shipboard fires have begun with leaks from tank access covers.

541-9.8.2 GASKETS. Always use a new gasket when reinstalling a tank access cover. Even if the old gasket looks good, it has been permanently compressed; discard it. Gaskets for fuel tank access covers shall be 3/16 inch thick and shall be of the material specified in MIL-C-6183, Class I, Grade C (Firm) (NSN 5330-00-297-1073).

541-9.8.3 SEALING SURFACES. Make sure all gasket sealing surfaces are clean and undamaged. Small scratches or particles can cause leakage. If there is doubt about the condition of the sealing surface, use bluing compound to verify that the gasket is making contact over its entire surface.

541-9.8.4 TIGHTENING COVER FASTENERS. When installing a tank cover, tighten the nuts or bolts alternately across the diameter of the cover, to ensure even seating. Further guidance on tightening threaded fasteners is available in NSTM Chapter 075, Threaded Fasteners. Overtightening may damage the gasket and cause leakage.

541-9.8.5 CHECKING GASKET COMPRESSION. After the tank cover is installed, the compressed gasket should be between 0.13 and 0.15 inch thick. Where this gap is accessible, check the gasket compression by inserting a feeler gauge between the tank cover and the tank.

541-9.8.6 CHECKING FOR LEAKS. When practical, air-test the tank after a new cover has been installed, to verify that the cover does not leak. When refilling a tank after a new cover has been installed, watch the tank access cover for leaks and maintain direct communication with someone who can stop the refilling process. Immediately stop filling if the tank leaks.

541-9.8.7 STOPPING LEAKS. Some leaks can be stopped by tightening the nuts or bolts. Do not tighten the fasteners excessively if the leak persists; instead, remove the cover and look for problems with the sealing surfaces near the leak. If the cover is removed, discard the gasket and install a new gasket when reinstalling the cover.

541-9.9 PIPING

541-9.9.1 GENERAL. Shipboard piping is covered in detail in NSTM Chapter 505, Piping Systems .

541-9.9.2 PIPING CORROSION AND FIRE HAZARDS. Most shipboard fuel system pipe is carbon steel. Carbon steel fuel piping in bilges historically has corroded severely. Piping corrosion sometimes leads to fuel leaks.

541-9.9.2.1 Fuel leaks are dangerous (see paragraph 541-2.2): prevent leaks instead of reacting to them. Perform the fuel system inspection presented in **NSTM Chapter 505** carefully, using the wall thickness criteria specified. The effectiveness of the inspection, and thus the safety of the ship, depends greatly on the thoroughness of the inspector.

541-9.9.2.2 In the past, the pipe wall thickness of fuel pipes was evaluated by ultrasonic testing (UT) at four points around the circumference of the pipe every few feet along its length. This UT survey technique, however, was found to be ineffective for carbon steel fuel pipe. Although surface corrosion may be widespread, the pipe walls typically become dangerously thin only over a few small areas. The UT readings every few feet along a pipe often missed these small areas of thin wall. The inspection in **NSTM Chapter 505** relies on visual inspection to locate thin-walled areas, then uses UT to evaluate these areas.

541-9.9.2.3 Regardless of how thorough piping inspections are, they may not prevent all piping leaks. Always be alert for the odor or visual evidence of fuel leakage. If a piping leak is found, secure the system immediately. Temporarily repair the leak according to the procedures in **NSTM Chapter 505** and NSTM Chapter 079, Volume 2, Practical Damage Control. Temporary repairs require an approved Departure from Specifications (DFS). Repair the leak permanently at the first opportunity.

541-9.9.3 FLANGE SPRAY SHIELDS. **NSTM Chapter 505** gives detailed guidance on which locations require flange spray shields for fuel-system flanged joints. Flange shield construction and installation requirements are also covered in **NSTM Chapter 505** .

541-9.9.3.1 Flange spray shields capture any fuel that sprays from the joint and direct the fuel to drip or dribble to a safe place. Dribbling fuel leaks are much less dangerous than spraying leaks, but repair all such leaks immediately.

541-9.9.3.2 A fuel-soaked flange spray shield indicates a leaking joint. Remove and discard the shield (see paragraph 541-2.4.5). Repair the joint and install a new flange spray shield.

541-9.9.3.3 Flange shields and flange shield material received from the stock system have a rubberized coating on one side. The rubberized coating shall face outward, away from the piping joint.

541-9.9.4 MAINTENANCE

541-9.9.4.1 Preventing Corrosion in Steel Piping Systems. **NSTM Chapter 631** covers corrosion prevention. Keep piping painted as well as possible. The effectiveness of paint depends greatly on how well the surface of the pipe is prepared before painting. When replacement sections of pipe are made up in a shore-based facility, they shall be blasted and painted in the shop before being installed on the ship. Good surface preparation is much more difficult to achieve aboard ship, especially in the bilge. When preparing the piping surface or painting piping, remember that paint is not merely cosmetic. Paint prevents corrosion, preventing eventual fuel leaks and possible fires. Prepare and paint hard-to-see and hard-to-reach areas well, because corrosion in these areas can go unnoticed until leaks develop.

541-9.9.4.2 Copper-Nickel and Stainless Steel Fuel Piping. Copper-nickel or stainless steel piping may be installed in existing steel fuel systems if the following conditions are met:

a. The new material will run only between tanks or existing flanges that are high enough to avoid bilge water. No material transitions shall be located in the bilge.
b. All components in the new line will be replaced with galvanically compatible components. This prevents rapid galvanic corrosion of steel components.

541-9.9.4.2.1 Stainless steel does not resist corrosion by seawater as well as copper-nickel. Consequently, stainless steel fuel piping is not used in bilge areas of steam ships nor in tanks that may contain seawater. Copper-nickel has been used in some ships to replace piping in the bilge area or in tanks that may contain seawater, since it is more resistant to corrosion.

541-9.9.4.2.2 Installing **short pieces** of copper-nickel or stainless steel in a carbon steel piping system in the bilge can lead to severe galvanic corrosion. The remaining carbon steel will corrode sacrificially, protecting the new material. The corrosion of the steel may not occur next to the new material but instead could occur anywhere the paint on the steel has broken down.

541-9.9.4.2.3 Copper-nickel or stainless steel fuel piping in immersion areas such as bilges shall be kept painted to reduce galvanic corrosion of nearby steel and to prevent corrosion of the stainless steel.

541-9.9.4.3 Extent of Piping Replacement During Repairs. Thin spots or leaks found in fuel system piping are usually repaired by removing and replacing as little piping as possible. It is sometimes better, however, to replace a longer run of piping. Once a thin-walled area or leak has been found, decide whether to repair the local area or replace a major run of piping. The guidance given below is for deciding **how much** pipe to replace during repairs, not **whether** to replace pipe at all. Use the inspection and wall thickness criteria in **NSTM Chapter 505** to decide whether to replace pipe. Use the following guidance to decide how much pipe to replace once the decision to replace has been made:

a. **Wall Thickness Below Minimum for Welding.** Replace a large run instead of just the local failed area if most of the run has wall thickness below the minimum required for welding. Minimum thicknesses for welding are available from MIL-STD-278, Fabrication, Welding, and Inspection of Machinery, Piping, and Pres-

sure Vessels of Ships of the U.S. Navy. Remove piping between areas with walls thick enough for welding, or it will be impossible to weld-in the replacement pipe.

b. **Multiple Failures.** Replace a large run instead of just the local failed area if several leaks or thin spots are fairly close together in the run. It is probably cheaper to repair all the failures at once by replacing the entire run instead of making cuts and welds at each failure.

c. **Several Relatively Thin Spots.** Consider replacing a large run instead of just the local failed area if the run has several relatively thin spots, even though the thin spots are not yet down to the minimum criterion. If the thin spots are likely to reach the minimum criterion within the life of the ship, replacing the entire run may save money over the life of the ship.

d. **Excessive Corrosion.** Consider replacing a large run instead of just the local failed area if the run appears excessively corroded over much of its surface. Visual inspection is imperfect and can miss significant thin spots. Since the pipe is to be repaired anyway, it is safer to replace the entire corroded run.

e. **Close to Ignition Sources.** Consider replacing a large run instead of just the local failed area if the run passes near ignition sources. Leaks near ignition sources are more likely to lead to severe fuel spray fires than are most other piping leaks.

541-9.9.4.4 Maintaining Records. Keep a diagram of the fuel piping that shows where thin spots were found in previous piping inspections and where piping has been repaired or replaced. Include thin spots that were still above the minimum pipe wall thickness requirement. Such records simplify future inspections and help in planning long-term maintenance.

541-9.10 VALVES

541-9.10.1 GENERAL. Valves are covered in detail in **NSTM Chapter 505** and various rate training manuals.

541-9.10.2 LEAK-BY. Fuel system valves have historically had problems with leaking by. Valve leak-by can cause fuel accounting problems by allowing fuel to enter or leave tanks that are supposed to be isolated. Leaking tank valves can even cause a tank to gradually overflow, leading to fuel loss and pollution. Leak-by is most dangerous when valves are used to isolate portions of the system for maintenance.

541-9.10.3 USE OF HIGH-PERFORMANCE BUTTERFLY VALVES. Many older fuel systems include butterfly valves procured to MIL-V-22133. These valves lack positive stops for disk travel and positive stem retention when the operating gear is removed. These problems can cause substantial fuel leakage past a valve whose indicator reads CLOSED and have caused shipboard fuel fires. These valves have also been historically unreliable. Old-style butterfly valves in fuel systems are being replaced with new, high-performance butterfly valves (HPBV) procured to MIL-V-24624. The replacement will improve ship safety and reduce maintenance burden. The transition from old-style butterfly valves to HPBVs is discussed further in **NSTM Chapter 505** .

541-9.10.4 QUICK-CLOSING VALVE ACTUATING CABLE SLACK. Cable-actuated quick-closing valves have historically had problems with tripping under shock loads. Most unintended trips are caused when the cables are too tight. Flexing of the ship structure during shock or rough seas stretches the cables, tripping the valve.

541-9.10.4.1 Quick-closing valve actuating cables require 3 to 4 inches of slack at the valve. The slack ensures that relative motion of the pulleys, valve, and actuating handle will not trip the valve. About 4 inches of cable pull will be required to trip the valve.

541-9.10.4.2 Cables have also come loose from the pulleys and jammed between the pulley wheel and the housing. This concern is what prompted personnel to keep the cables excessively tight in the first place.

541-9.10.4.3 The best solution is to replace cable actuating systems with linear actuators, such as the Teleflex actuator, the Controlex actuator, or others. These systems have no pulleys but instead completely enclose the cable in a flexible sheath. The required slack is built into the actuator at the valve end. Linear valve actuators are described in S6438-AA-DDT-010, Actuating Assembly, Single Linear, For the Remote Actuation of Quick Acting Valves .

541-9.11 PUMPS

541-9.11.1 OVERVIEW. Most fuel system pumps are rotary positive displacement (PD) pumps, either motor-driven or steam turbine-driven. The most common kinds are screw pumps and sliding vane pumps. Other types of pump are used in particular applications. Some stripping systems use steam-driven reciprocating pumps. Cargo fuel pumps are usually centrifugal. Pumps are covered in detail in their component technical manuals; NSTM Chapter 503, Pumps; and various NAVEDTRA rate training manuals.

541-9.11.2 GENERAL INFORMATION

541-9.11.2.1 Positive Displacement Pump Characteristics. PD pumps usually have good suction lift capability and some tolerance for solid particles in the fluid. Even so, the pump will last longer if it is aligned with the shortest suction runs and pumps the cleanest fluid possible. On ships with transfer pumps in more than one space, when possible use a pump in the space closest to the selected suction tank. Take suction from tanks closer to the pump rather than from remoter tanks, unless damage control considerations prevent this. Keep transfer system strainers and purifiers in good repair, to prolong the life of the service pumps as well as to avoid overtaxing the service system strainers or filters.

541-9.11.2.1.1 Motor-driven PD pumps move a constant flow by developing whatever discharge pressure they need. Throttling a valve in a motor-driven PD pump discharge line will not adjust flow rate. When the discharge valve is throttled the pump will continue to force the same flow through the valve by increasing discharge pressure until the pump relief valve lifts.

541-9.11.2.1.2 Steam-driven PD pumps have constant-pressure governors that vary the pump’s flow to maintain a constant pressure.

541-9.11.2.2 Pump Relief Valves. All PD pumps require discharge relief valves. If the line downstream of a PD pump were closed and it had no relief valve, the PD pump might develop enough pressure to rupture the pipe.

541-9.11.2.2.1 Fuel system PD pump relief valves are downstream of the pump, preceding any other valves. The relief valves discharge to pump suction. Some pumps, such as Blackmer sliding vane pumps, have the relief valve inside the pump casing.

541-9.11.2.2.2 When the relief valve lifts, fuel recirculates through the pump. Recirculation heats the fuel, which in turn lowers its viscosity. Lowering the viscosity causes excessive wear of the pump internals. Thus, the fuel

shall not be allowed to heat to more than 125°F (52°C). Fuel temperature, however, rarely can be measured at the pump. To avoid overheating the fuel, therefore, do not allow a PD pump to run against a dead-headed system for more than 1 minute.

541-9.11.3 OPERATION

541-9.11.3.1 Practical Limitations on Throttling. Do not throttle a PD pump's discharge, except when performing procedures where throttling is explicitly required. Throttling a PD pump's discharge has minimal effect on flow but it does increase system pressure (see paragraph 541-9.11.3.1.1). If system pressure reaches the relief valve set point, the relief valve will begin to lift. Further throttling will reduce system flow by forcing more of the pump's constant flow through the relief valve. System pressure will be determined by the relief valve characteristics.

541-9.11.3.1.1 Frequent lifting of the relief valve can cause the seat to leak and the valve to fail prematurely. Some ships have a manual recirculation valve at the pump. This valve allows control of system flow without lifting the relief valve.

541-9.11.3.1.2 If a large amount of pump flow is being recirculated, the fuel may heat up. If the liquid end of the pump becomes too hot to rest a bare hand on, either increase the system flow (decrease the recirculation) or stop the pump.

541-9.11.3.2 Losing Suction. Avoid running pumps without suction. Make sure the system is properly aligned before starting a pump, and stop pumping before the tank from which suction is taken is completely empty. Running a fuel pump dry will not usually result in catastrophic failure, but it will increase the internal wear rate considerably, decreasing the time until the next pump overhaul is required.

541-9.12 STRAINERS

541-9.12.1 GENERAL. Detailed information on specific fuel system strainers is available in technical manuals for the strainers.

541-9.12.2 APPLICATION. Strainers are usually the only kind of fuel filtration used on steam ships. Gas turbine and diesel ships use filters and centrifugal purifiers to clean the fuel. Strainers are not usually found on the suction side of pumps because they might clog and starve the pumps, causing damage. Pump suction strainers can be used for temporary system cleanup, but should be removed (or have their baskets removed) after the cleanup has been completed.

541-9.12.2.1 Transfer Systems. Transfer system strainers remove larger contaminants from fuel, reducing the load on the service system strainers and improving the life of the service pumps. Baskets usually have 4-mil (0.004-inch) openings. Simplex strainers are used in transfer systems because there is enough time between transfers to clean the strainer if necessary.

541-9.12.2.2 Service Systems. Steam ship service system strainers require 24-mesh baskets to provide filtration fine enough to allow boiler fuel controls and atomizers to work properly. Duplex strainers are used for propulsion boilers; simplex strainers are used for auxiliary equipment that is operated intermittently.

541-9.12.2.3 Inline and Cone-Type Strainers. Inline and cone-type strainers consist of a strainer element inserted into the system pipe and secured by a set of flanges. This kind of strainer is used only for system cleanup at shipyards and is not permitted for normal operation. Remove any inline or cone-type strainers from fuel systems.

541-9.12.3 DESCRIPTION. Strainers remove solid particles from fuel by passing the flow through openings that are smaller than the particles. The openings are part of a removable element that consists of either a wire-mesh or a perforated plate. In most fuel system strainers flow passes from the inside of a basket-shaped element to the outside, leaving the particles trapped in the basket. Fuel system strainer baskets are made of monel or stainless steel.

541-9.12.3.1 Metal-Edge Strainers. Metal-edge strainers used on diesel engines have a different configuration, though the basic principle of operation is the same. They are covered in NSTM Chapter 233, Diesel Engines .

541-9.12.3.2 Simplex and Duplex. Simplex strainers consist of one removable basket in a housing. All flow passes through the basket. Duplex strainers have two baskets. Flow passes through only one basket at a time. When the online basket becomes clogged, flow is switched over to the other basket.

541-9.12.3.3 Firesafe Fuel Oil Strainer. Firesafe fuel oil strainers (FSFOS) are duplex strainers used in almost all active steam ship fuel service systems. The AO 177 class has a non-Navy firesafe strainer approved by NAVSEA. The FSFOS (Figure 541-9-2) includes several design features intended to make fuel service operation safer and more convenient.

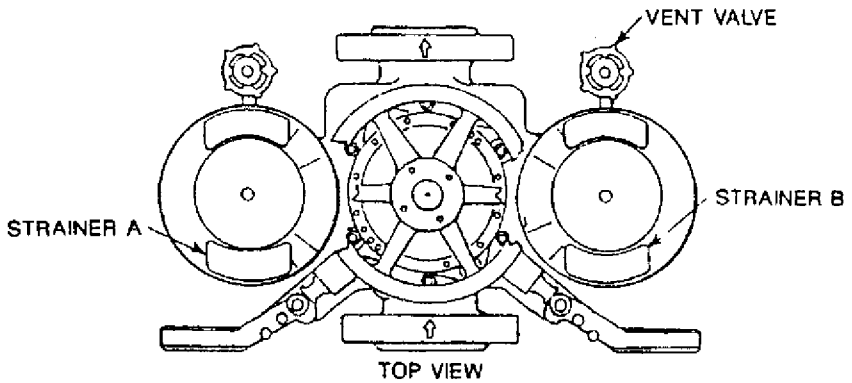

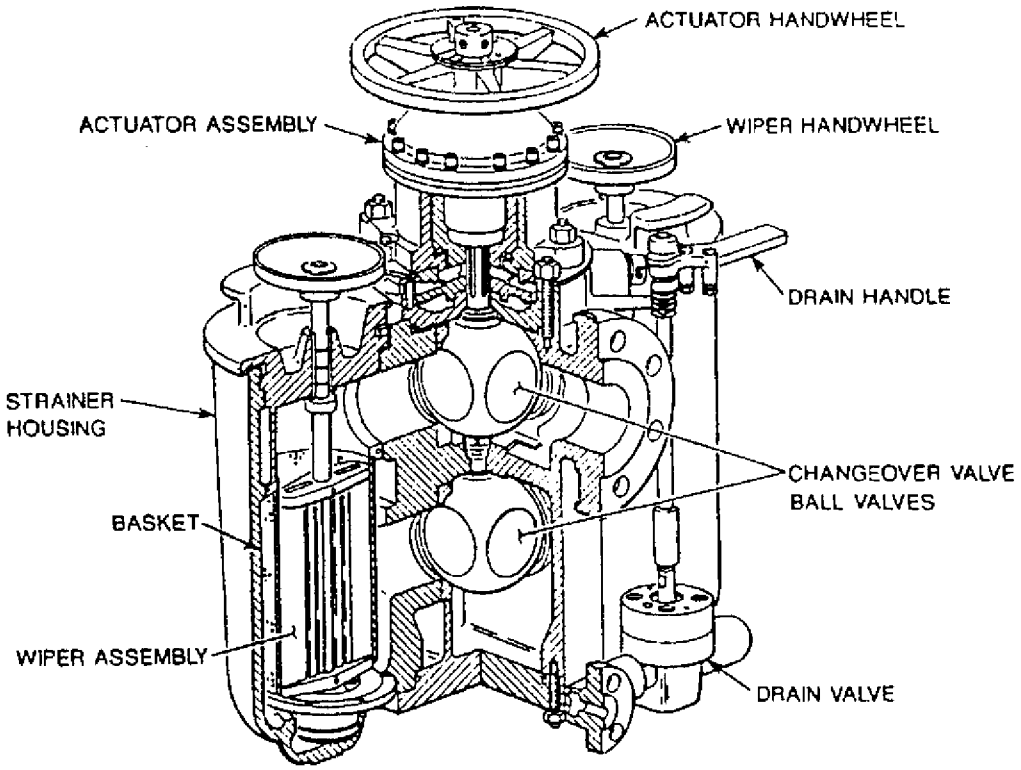

Figure 541-9-2 Firesafe Fuel Oil Strainer (FSFOS)

541-9.12.3.3.1 The FSFOS's off-line basket can be cleaned (back-flushed) without opening the housing. Rotating a handwheel moves a wiper inside the basket that scrapes debris from the inside wall of the basket. Clean fuel is then back-flushed through the basket and routed out the drain. This back-flush removes more particles from the basket wall and flushes all removed debris out the drain.

541-9.12.3.3.2 The FSFOS uses ball valves to switch flow between baskets. This feature avoids the maintenance problems encountered with previous strainer designs that used plug valves. The ball valves are operated by rotating the actuator handwheel. The actuator is a geared mechanism that reduces the actuating force needed to switch baskets.

541-9.12.3.3.3 The housing covers above each basket are held in place with locking tabs and sealed with O-rings. Other strainers with bolted covers and gaskets historically had problems with leakage. Should fuel leak past the cover O-ring, the covers include integral spray deflectors to direct the leaking fuel downward. Deflecting leaked fuel downward makes it less likely that the leaked fuel will contact a hot surface and start a fire. Nevertheless, detection of any leak from the strainer requires immediate isolation of the entire FSFOS for repair .

541-9.12.3.3.4 Previous duplex strainers were enclosed in spray shields with deep drip pans under them. Because of its safety features, the FSFOS does not require safety shields and drip pans. Drip pans were retained on some ships at the discretion of the installing activity. Flange spray shields are still required on the connections to system piping. Shield hot surfaces beneath the FSFOS, so any fuel deflected downward by the FSFOS's cover will not ignite.

541-9.12.3.3.5 FSFOS vent valves are part of the strainer assembly, however it is prudent to verify that the direction of flow is under the seat and not against the packing stem. The vents discharge to the oily water drain collecting system by way of a funnel and check valve. For some installations, the vents may discharge to a drip pan which discharges to the oily water drain collecting system.

541-9.12.3.3.6 FSFOS drain valves are part of the strainer assembly. The drain connection from the FSFOS is hard piped separately to an oily waste drain tank, or to a bilge sump tank on some ships. The drain pipe includes a sight flow indicator and a check valve. Normally the attached strainer cutout valves are the only valves between the strainer and the tank connection. If any other stop valve is included in the drain line, all piping and components, including the sight glass, upstream of that valve shall be rated for the full service system design pressure .

541-9.12.3.3.7 In the event of FSFOS drain valve leakage, the drain tank could be overfilled, and overflow. These drain tanks shall have vents and overflows that shall terminate away from hot surfaces. In addition, any overflow that terminates in the bilge shall have its terminal visible from the grating level.

541-9.12.3.3.8 More information on the FSFOS is available in its technical manual, S9261-AN-MMA-010, Fire-safe Duplex Fuel Oil Strainer, 3-Inch, 80 Gpm, Model 5001048 .

541-9.12.4 OPERATION. Monitor the pressure drop through an operating strainer. All strainers should have either a duplex pressure gauge or a differential pressure gauge to show the pressure difference between the inlet and the outlet. Note the pressure drop through a new basket. As the strainer is used, particles gradually build up in the basket, decreasing flow area. As the basket clogs, the pressure drop across the strainer increases. A gradual increase in pressure drop is normal and indicates that the strainer is doing its job.

541-9.12.4.1 Transfer System Strainer. The maximum allowable pressure drop for transfer system strainers is found by adding 20 percent of the rated discharge pressure of the transfer pump to the pressure of the strainer when clean. Clean the basket at the next opportunity, when the pressure drop approaches the maximum allowed value. If the pressure drop exceeds the maximum allowed value, secure the pump if possible. High pressure drops may damage the basket or cause the pump relief valve to lift. Lifting the relief valve will severely reduce the system flow.

541-9.12.4.2 Service System Strainer. While one compartment of a FSFOS is used for normal operations, the other compartment is maintained as a clean backup.

541-9.12.4.2.1 When the pressure drop through a FSFOS exceeds 10 lb/in^2 , switch to the backup compartment and back-flush the basket that was originally on line. Then, switch back to the original basket. If the pressure drop still exceeds 10 lb/in^2 , back-flush the original basket again. If the second back-flush fails to reduce the pressure drop to below 10 lb/in^2 , switch to the backup basket and continue operation.

WARNING

Never open a service system duplex strainer while the strainer is pressurized, not even the off-duty compartment. Opening the strainer is prohibited because of the hazard posed by high-pressure flammable fluid.

541-9.12.4.2.2 If back-flushing does not reduce the pressure drop through a compartment to 6 lb/in^2 , or below, open and inspect the compartment the next time the strainer is secured.

541-9.12.4.3 Pressure Drop Fails to Increase. If the pressure drop through a strainer falls or does not rise at all for an unusually long time, open the strainer at the next opportunity and investigate. The basket may be damaged or missing, allowing unfiltered fuel to pass through the strainer. Unfiltered fuel may clog or damage downstream components. Experience with a particular strainer will determine how quickly pressure drop can be expected to increase. If the fuel is not unusually contaminated, strainers may go for long periods without requiring back-flushing or cleaning. Service system strainers (FSFOS) often last a month or longer without requiring back-flushing.

541-9.12.5 MAINTENANCE. The following paragraphs give general guidance on strainer maintenance.

541-9.12.5.1 Preparation for Disassembly

WARNING

Never open a service system duplex strainer while the strainer is pressurized, not even the off-duty compartment. Opening the strainer is prohibited because of the hazard posed by high-pressure flammable fluid.

Isolate the strainer before maintenance. Drain and vent the strainer. Drain and vent both compartments of a duplex strainer. This will relieve any pressure that may be trapped in the housing. Venting also will confirm that the strainer is not under pressure. Leave the vents open while working on the strainer.

541-9.12.5.2 Cleaning the Baskets. Wire screens can be damaged easily, so remove baskets carefully. If a spare basket is available, install it immediately and put off cleaning the removed basket until the strainer is restored to service. To clean a strainer basket, soak it in a solvent such as F-76 or JP-5 and lightly scrub the basket with a nonmetallic brush.

541-9.12.5.3 Returning to Service. Use new cover gaskets or O-rings when installing a strainer cover. Inspect cover gaskets or O-rings and their seating surfaces. Watch the strainer for any leakage when the strainer is pressurized. If the strainer leaks secure the pump immediately.

WARNING

Make sure that strainer vent lines are directed downward into an oily water drain collecting system funnel. Fuel may spray from vents while the strainer is being filled or pressurized. Vents are directed to a funnel (or drip pan) to prevent fuel fire caused by spraying fuel striking a hot surface.

541-9.12.5.3.1 If possible, fill the chamber with fuel before pressurizing the strainer. Vent the chamber while filling it. Transfer system strainers are usually filled by backflow from the service tank. Close the vent valve the moment fuel appears.

541-9.12.5.3.2 If there is no way to fill the chamber without pressurizing the strainer, crack open the vent valve during initial pressurization. Do not leave it unattended. Close the vent valve the moment fuel appears.

541-9.13 FILTER/SEPARATORS

541-9.13.1 APPLICATION. Gas turbine ships use filter/separators to clean the fuel in the service system. Service system units are either duplex or simplex. If simplex filter/separators are installed, two units are installed in parallel. Some diesel ships use filter/separators in the transfer system, but for newer ships this practice has been discontinued.

541-9.13.2 DESCRIPTION. Figure 541-9-3 shows a cross section through a typical duplex filter/separator. The numbers and orientation of coalescer and separator elements vary among units.

541-9.13.2.1 Functional Description. The filter/separators are designed to remove solids and water from fuel. Contaminated fuel under pressure enters the unit through an inlet pipe and flows into and through the coalescer elements, which filter out the solid contaminants and coalesce the water into large droplets. The water settles out to the bottom of the unit, and the fuel flows through the separator elements, which remove any remaining water. Clean fuel is then discharged from the unit through the outlet.

541-9.13.2.2 Class 1/Class 2. Units can be class 1 or class 2. Class 1 units have automatic water drains. Manual controls are also provided. Class 2 units have only manual controls for water drain.

541-9.13.2.3 Simplex. Simplex filter/separators have only one compartment, through which all flow passes. Simplex fuel system filter/separators are similar to those used for JP-5 systems but have a reduced flow rating and lack the hydrophobic screen used in JP-5 units between the coalescer and the separator elements.

541-9.13.2.4 Duplex. Duplex filter/separators have two compartments, each containing enough coalescer and separator elements to pass the entire flow. Flow passes through only one compartment at a time. The flow path is controlled by four butterfly valves, one inlet and one discharge for each compartment. The unit automatically

switches compartments when the pressure drop through the online compartment is excessive. The online compartment can also be changed by pressing a button or, in an emergency, by operating the butterfly valves manually.

541-9.13.2.5 Construction. A typical unit has a sight gauge assembly, a differential pressure gauge, an outlet pressure gauge, an inlet pressure gauge, and a fuel outlet sampling valve. For class 1 units a float control valve is bolted to a flange welded to the shell on or near the bottom. This valve is actuated by a captive float that rises and falls with the water level in the unit shell. The float control valve is connected by pressure control piping to the automatic water drain valve. A manually operated water drain valve is also provided in connection with the water drainpipe.

541-9.13.3 OPERATION. Monitor the pressure gauges during operation of the filter/separator. Sample the filter/separator discharge as required in Table 541-10-2.

541-9.13.3.1 Maintain a filter/separator log for unit hours of operation, element replacement dates, and differential pressure. Excessive pressure can damage or rupture the coalescer elements. A drop in differential pressure (for the same flow conditions) indicates damaged elements. Start a new log when elements are changed out. Retain the last log for records.

CAUTION

Avoid draining the filter/ separator housing when the unit is in service. Coalescer elements shall be kept submerged to prevent drying out and loss of effectiveness.

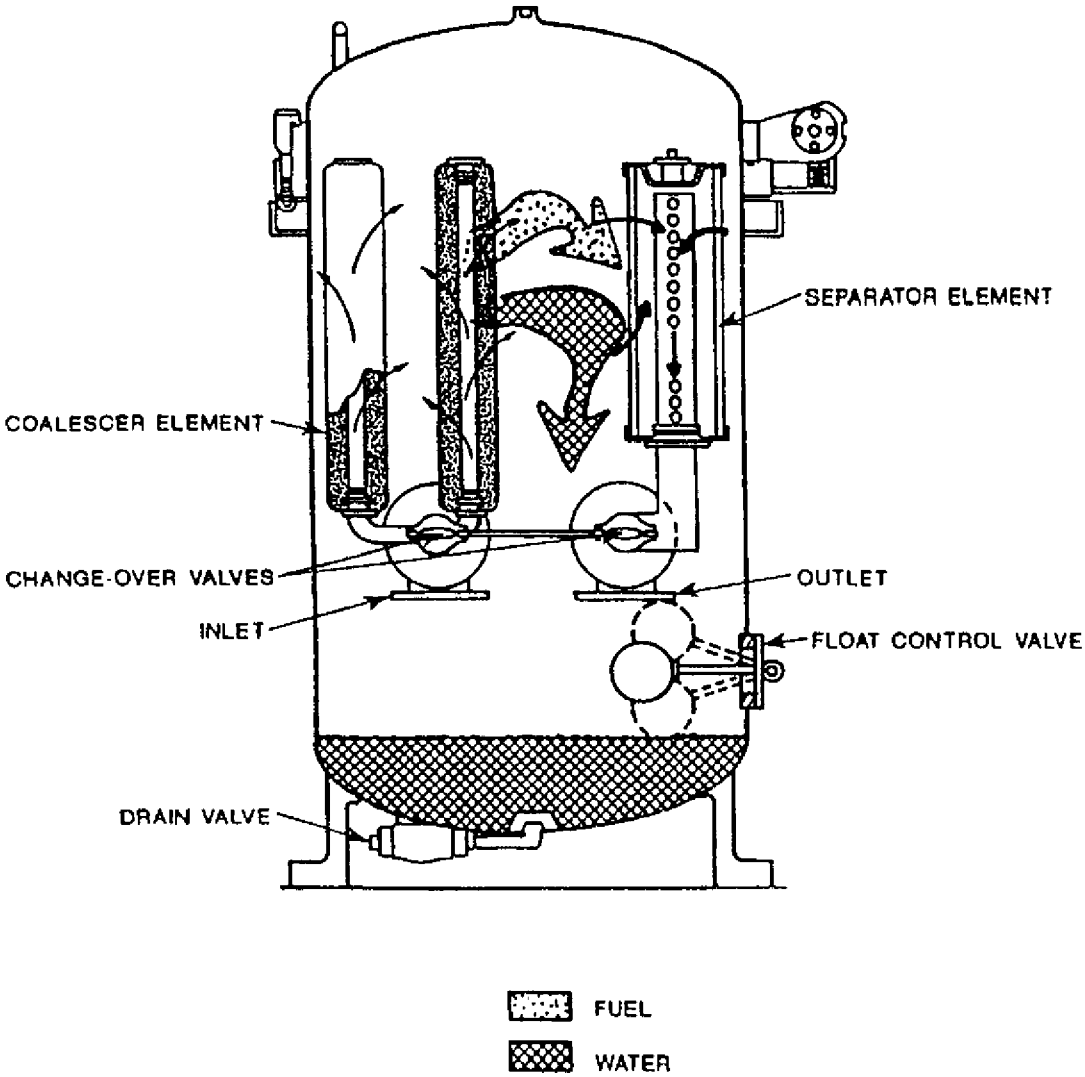

Figure 541-9-3 Filter/Separator Flow Schematic

541-9.13.3.2 For class 1 units operation is automatic after alignment and flow are established. Class 2 units require draining the sump before and after use. Monitor the sump gauge glass for water accumulation. Sample the sumps of all units (class 1 and class 2) before securing the pumps, to ensure that no water remains in the bottom of the filters. Solid particles in the sump sample indicate ruptured coalescer elements, which shall be inspected and replaced as necessary.

541-9.13.4 MAINTENANCE

541-9.13.4.1 Maintenance Intervals. Replace the filter/separator coalescer elements as required by schedule and by operating conditions. Inspect the separator elements when replacing the coalescer elements.

541-9.13.4.1.1 Replace coalescer elements during each regular overhaul, periodically as required by PMS, and when any of the following conditions exist:

a. When fuel analysis indicates that fuel quality is not meeting the requirements in Table 541-10-2.

b. When pressure drop across the filter/separator housing exceeds the amount specified in the unit's technical manual.

c. When samples taken from the filter/separator water sump contain solid particles.

541-9.13.4.1.2 When replacing coalescer elements, examine the separator elements for dirt and possible damage to the Teflon™ . Test the clean separator elements, and replace only those that are defective. The Teflon™ -coated separator elements are considered permanent. They will function as long as they remain intact and clean.

541-9.13.4.2 Coalescer Element Inspection and Replacement

WARNING

Replacement of elements involves contact with toxic fuel and its vapors. Elements that have been used in any type of fuel are a fire hazard. Remove them from the compartment and place them in firesafe containers for disposal. Wear protective clothing when handling elements.

Clean interior surfaces of the coalescer side of the filter housing with lint-free rags; clean the center tubes with a soft-bristle brush and lint-free rags. Place cleaning rags in a firesafe container and remove them from the ship as soon as possible.

CAUTION

Be careful not to damage or dirty the coalescer element during inspection and installation. Personnel shall touch the coalescer element only with gloved hands.

541-9.13.4.2.1 At the installation site, supervisory level personnel (senior petty officer or above) shall visually inspect each coalescer element for physical damage and defects before installing it in the filter/separators. Use adequate light, and protect the elements from any contact with dirt, grease, and fluids. Any sign of physical damage (nicks, dents, cuts, etc) or physical defect (gasket improperly centered, distorted center tube, gasket, or seal, etc) shall be cause for rejecting the element. Once the element passes the visual inspection, install it in the filter/separator. Return all failed elements to the supply point in their original packaging, and submit quality deficiency reports (Form 364) identifying NSN, contract number, and requisition number to:

Defense Construction Supply Center
Attn: Quality Assurance Director
P.O. Box 3990
Columbus, OH 43216-5000

541-9.13.4.2.2 All coalescer elements installed in the filter/separator should be from the same manufacturer if enough elements from one manufacturer are available. Using elements from the same manufacturer ensures that flows through the elements will be equal. Do not order additional elements, however, just to get a full set from one manufacturer. All elements procured to the same NSN are similar enough to work well together.

541-9.13.4.3 Separator Element Replacement and Test. Paper separator elements are no longer specified for use. Permanent (Teflon™ -coated) elements are used instead. The following steps include reinstallation as well as removal, inspection, and testing of permanent elements. Observe the warnings and safety precautions outlined in the appropriate equipment manual.

CAUTION

Separator elements have delicate and vulnerable surfaces. Protect them from damage caused by hard or sharp objects. Avoid contacting elements with bare skin, particularly after the separator element has been cleaned.

1. Remove the separator elements from their mounts, and store them in a safe place until needed for cleaning and inspection.
2. Clean the interior surface of the separator side of the filter with lint-free rags; clean the center tubes with a soft-bristle brush and lint-free rags.

WARNING

Wear a face shield and clear the immediate area of personnel when using low-pressure air.

3. Wash the separator elements in clean, fresh water; dry them with low-pressure air.
4. Inspect the elements for broken seams, dents, punctures, and foreign material. Any physical damage is cause for rejection.
5. Test permanent (Teflon™ -coated) separator elements (both new and used).
   a Vigorously agitate the element in a bath of clean fuel to wet the entire surface of the Teflon™ screen with fuel.
   b Stand the element on end to allow excess fuel to drain.

NOTE

Proceed with steps 5.c within 5 minutes.

   c Hold the element in a horizontal position, preferably on a clean, dry table. Use absorbent mats, if available.

NOTE

Do not attempt to plug one end and fill the unit with water in a vertical position or it will leak.

   d Pour 250-350 mL (approximately 1/2 pint) of clean, fresh water into the center tube of the element.
   e Slowly rotate the element and watch for water penetration or leaks. Pay particular attention to seams and end caps. Water penetrations or leaks indicate failure, and the element is unusable. Rinse acceptable elements with clean fuel before installing them.

NOTE

Submit Quality Deficiency Reports (QDR) on new elements that fail test porce-dures.

6. Reinstall/install inspected and tested elements; be sure that elements are properly positioned on each tube and tightened securely. Do not overtighten.

541-9.13.4.4 Returning to Service

WARNING

Make certain that the filter/separator vent lines are directed downward into an oily water drain collecting system funnel. Fuel may spray from vents while the unit is being filled or pressurized. Vents are directed to a funnel to prevent fuel fire caused by spraying fuel striking a hot surface.

CAUTION

Open filter/separator inlet valve slowly, to prevent rupturing filter elements.

Use a new cover O-ring when installing the filter/separator compartment cover. Inspect gaskets and their seating surfaces. When first pressurizing a compartment, vent the compartment until a solid stream of fuel appears in the vent line; then secure the vent valve. Watch the filter/separator for any leakage when the compartment is pressurized. If the filter/separator leaks, secure the pump immediately. To pressurize the compartment, close the inlet valve, start the pump, and then gradually open the inlet valve.

541-9.13.4.5 Ordering Filter/Separator Elements. Use National Stock Numbers listed on the filter/separator Allowance Parts List (APL), not the manufacturer's part number, when ordering new elements. Stock numbers for elements are shown in Table 541-9-1.

NOTE

The 20-inch coalescer elements used in F-76 fuel system filter/separators and the 20-inch coalescer elements used in some JP-5 systems filter/separators are not identical .

Table 541-9-1 ORDERING FUEL SYSTEM FILTER/SEPARATOR ELEMENTS

Type	Ship Class	Number of Elements	Flow	Length, in	National Stock Number
Coalescer	FFG 7	15	Inside-to-out	24	4330-00-931-2473
	DDG 51	11			
	DD 963DDG 993and CG 47	10 perside	Inside-to-out	20	4330-00-983-0998

Table 541-9-1 ORDERING FUEL SYSTEM FILTER/SEPARATOR ELEMENTS - Continued

Type	Ship Class	Number of Elements	Flow	Length, in	National Stock Number
Separator	FF 7	9	Outside-to-in	24	4330-00-973-3909
	DDG 51	7			
	DD 963,DDG 993,and CG 47	1 perside	Outside-to-in	16.25	4331-01-003-7890

541-9.13.4.6 Troubleshooting. If contaminated fuel is delivered from the filter/separator, proceed as follows:

1. Check to see that the coalescer and separator elements have been installed correctly and are performing properly. Replace them if necessary. Make sure that elements are securely attached to the mounting assembly standpipe.
2. Check to see that the float control valve is operating properly. Use the float control tester where installed. If it is operating improperly, proceed as follows:

CAUTION

Do not attempt to disassemble the float control valve or to tamper with it. Special tools and instruments are needed for assembly and adjustment.

3. Check the flow indicator arrow on the drain valve body to be certain that it is properly installed.
4. Check all lines leading from the float control valve for damage. Replace flattened sections that restrict flow.
5. Clean out the strainer covering the supply line port.
6. If necessary, disconnect each line and blow air through the line to ensure that all lines are free of obstruction.
7. If no defects are revealed above, remove and check the float control valve and piping. Before removing the valve, blow air through each port, with the float arm positioned to open the port. If air fails to pass through any port when the port should be open during operation, an obstruction is in the valve. Replace the valve.

541-9.14 PREFILTERS

541-9.14.1 APPLICATION. Most gas turbine ships have a prefilter upstream of the filter/separator. Duplex prefilters are used with duplex filter/separators, and simplex prefilters are used with simplex filter/separators. The prefilter removes most solid contaminants from the fuel before it reaches the filter/separator. Experience with filter/separators operating without prefilters has shown that the filter/separator elements clog quickly.

541-9.14.2 DESCRIPTION. Contaminated fuel under pressure enters the unit through an inlet pipe and flows into the online compartment. Each prefilter compartment contains several identical paper filter elements through which flow passes in parallel. Flow is from the outside to the inside of the elements. Flow from the elements is combined and exits through a discharge pipe.

541-9.14.2.1 Elements. Prefilter elements remove solid contaminants from the fuel but allow water to pass. Water and solids are removed by the downstream filter/separator. As the prefilter elements collect contaminants, the pressure drop across the elements increases, resulting in an increased pressure drop across the unit. Dirty elements are disposed of and replaced with new elements.

541-9.14.2.2 Simplex/Duplex. Simplex prefilters have only one compartment, through which all flow passes. Duplex prefilters have two compartments, each containing enough elements to pass the entire flow. Flow passes through only one compartment at a time. The flow path is controlled by two mechanically linked ball valves. The inlet ball valve directs flow to either compartment, and the outlet ball valve accepts flow from the same compartment. Compartments are changed by manually operating the changeover mechanism.

541-9.14.2.3 Construction. Prefilters are outwardly similar to filter/separators. A typical unit has a differential pressure gauge, inlet and outlet pressure gauges for each compartment, and inlet and outlet fuel sampling connections attached to the unit. Each compartment has its own vent, fuel drain, and sludge drain connections. Since prefilters capture most solid contaminants in the elements and do not block water, relatively little sludge and water accumulates in the bottoms of the compartments. Automatic drain valves such as class 1 filter/separators have, therefore, are unnecessary.

541-9.14.3 OPERATION. Monitor the pressure drop through an operating prefilter. Maintain a prefilter log for unit hours of operation, element replacement dates, and differential pressure. Excessive pressure can damage or rupture the elements. A gradual increase in differential pressure is normal and indicates that the prefilter is doing its job. A drop in differential pressure (for the same flow conditions) indicates damaged elements.

541-9.14.4 MAINTENANCE. Replace prefilter elements during each regular overhaul, periodically as required by PMS, and when the pressure drop across the unit exceeds the amount specified in the unit's technical manual.

541-9.14.4.1 Opening the Compartment. Be sure the compartment to be opened is not in service. Make sure the guard ring is down, if so equipped, and the pressure gauges for the compartment show no residual pressure. Drain and vent the compartment before opening it, to eliminate residual pressure, to remove hazardous fuel, and to verify that the compartment is not under pressure.

541-9.14.4.2 Element Inspection and Replacement

WARNING

Replacement of elements involves contact with toxic fuel and its vapors. Elements that have been used in any type of fuel are a fire hazard. Remove them from the compartment and place them in firesafe containers for disposal. Wear protective clothing when handling elements.

CAUTION

Be careful not to damage or dirty the prefilter element during inspection and installation. Personnel shall touch the element only with gloved hands.

541-9.14.4.2.1 At the installation site, supervisory level personnel (senior petty officer or above) shall visually inspect each element for physical damage and defects before installation. Adequate light shall be available and care taken to protect the elements from any contact with dirt, grease, and fluids. Any sign of physical damage (nicks, dents, cuts, etc) or physical defect shall be cause for rejecting the element. Once the element passes the visual inspection, carefully install it directly in the prefilter unit. All failed elements shall be returned to the supply point in the original packaging, and quality deficiency reports (Form 364) identifying NSN, contract number, and requisition number, shall be submitted to:

Defense Construction Supply Center
Attn: Quality Assurance Director
P.O. Box 3990
Columbus, OH 43216-5000

541-9.14.4.2.2 All elements installed in the prefilter should be from the same manufacturer if enough elements from one manufacturer are available. Using elements from the same manufacturer ensures that flows through the elements will be equal. Do not order additional elements, however, just to get a full set from one manufacturer. All elements procured to the same NSN are similar enough to work well together.

541-9.14.4.3 Returning to Service

WARNING

Make sure that prefilter vents are directed downward into an oily water drain collecting system funnel. Fuel may spray from vents while the prefilter is being filled or pressurized. Vents shall be directed to a funnel to prevent fuel fire caused by spraying fuel striking a hot surface.

541-9.14.4.3.1 Use a new cover O-ring gasket when installing the prefilter compartment cover. Inspect gaskets and their seating surfaces. At startup, vent the prefilter until a solid stream of fuel is visible in the vent line; then, close the vent valve. Watch the prefilter for any leakage when the compartment is pressurized. If the prefilter leaks, secure the pump immediately. To pressurize the compartment, close the inlet valve, start the pump, and then gradually open the inlet valve. (If one compartment of a duplex prefilter is already in use, pressurize the other compartment with the equalization valve.)

541-9.14.4.4 Ordering Prefilter Elements. All fuel system prefilters in the surface fleet use the same prefilter element, NSN 4330-00-163-0310 or NSN 2910-01-026-2935. The latter element has a higher dirt loading capacity and finer filtration characteristicswhich add life to the filter/coalescer element.

541-9.15 CENTRIFUGAL PURIFIERS

541-9.15.1 APPLICATION. All gas turbine ships and most diesel ships use a centrifugal purifier to remove water and solid contaminants from fuel in the transfer system. Most fuel purifiers on newer ships (DDG 51, CG 47, LSD 41, AOE 6, AS 50, MCM 1, and MHC 51 classes) are disk-type, Alfa-Laval self-cleaning purifiers. Most purifiers on the DD 963 class are Sharples-Stokes model DDN-2500, which require manual cleaning. Manually cleaned Alfa-Laval purifiers are used on FFG 7 class ships.

541-9.15.2 DESCRIPTION. The purifier is essentially a motor-driven centrifuge. It separates contaminated fuel into its three major components due to the difference in their relative densities. These components are described as: the heavy phase (water), the light phase (purified fuel), and solids/sludge. The actual purification takes place within the bowl assembly. Rotation at high revolutions per minute (r/min) provides the centrifugal force necessary for the purification process. During normal operation, the purifier constantly discharges the heavy phase (water) and the light phase (purified fuel).

541-9.15.2.1 Physical Description. The motor-driven fuel purifier consists of a rotating bowl assembly enclosed within a stationary frame with hinged cover. The motor and purifier are mounted on a common structural base. A purifier assembly includes electric motor, drive assembly, spindle assembly, frame assembly, cover assembly, controller, and piping connections for fuel, water, and drain. A controller is furnished with the purifier. On the smaller purifier models, attached feed pump assemblies are provided. Disk-type self-cleaning purifiers and disk-type manually cleaned purifiers function similarly when purifying fuel. Figure 541-9-4 is a cross-sectional view (motor not shown) of an Alfa-Laval self-cleaning purifier. Figure 541-9-5 is a simplified cross-sectional flow diagram for the Alfa-Laval self-cleaning centrifugal purifier.

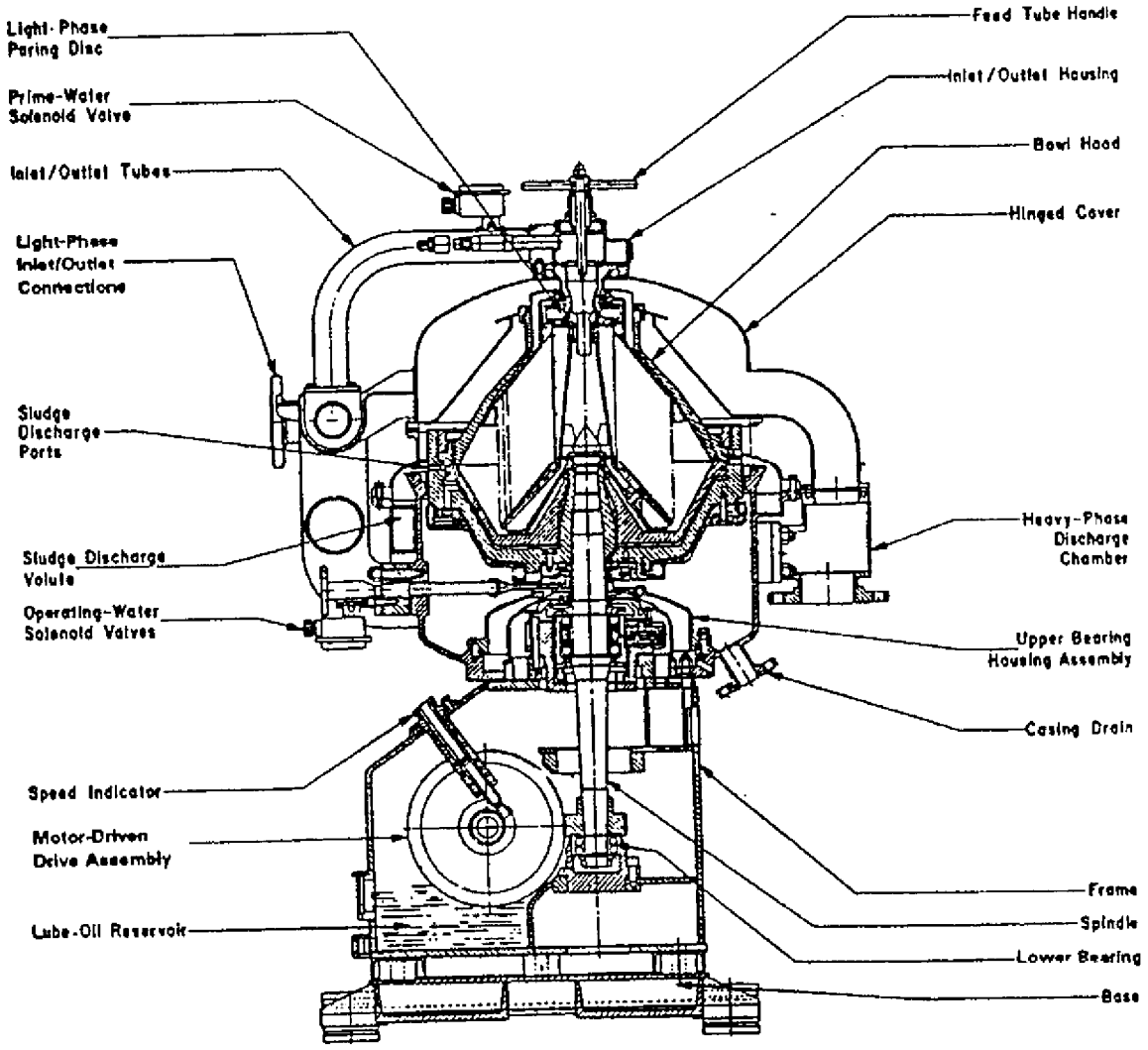

Figure 541-9-4 Purifier Cross-Section

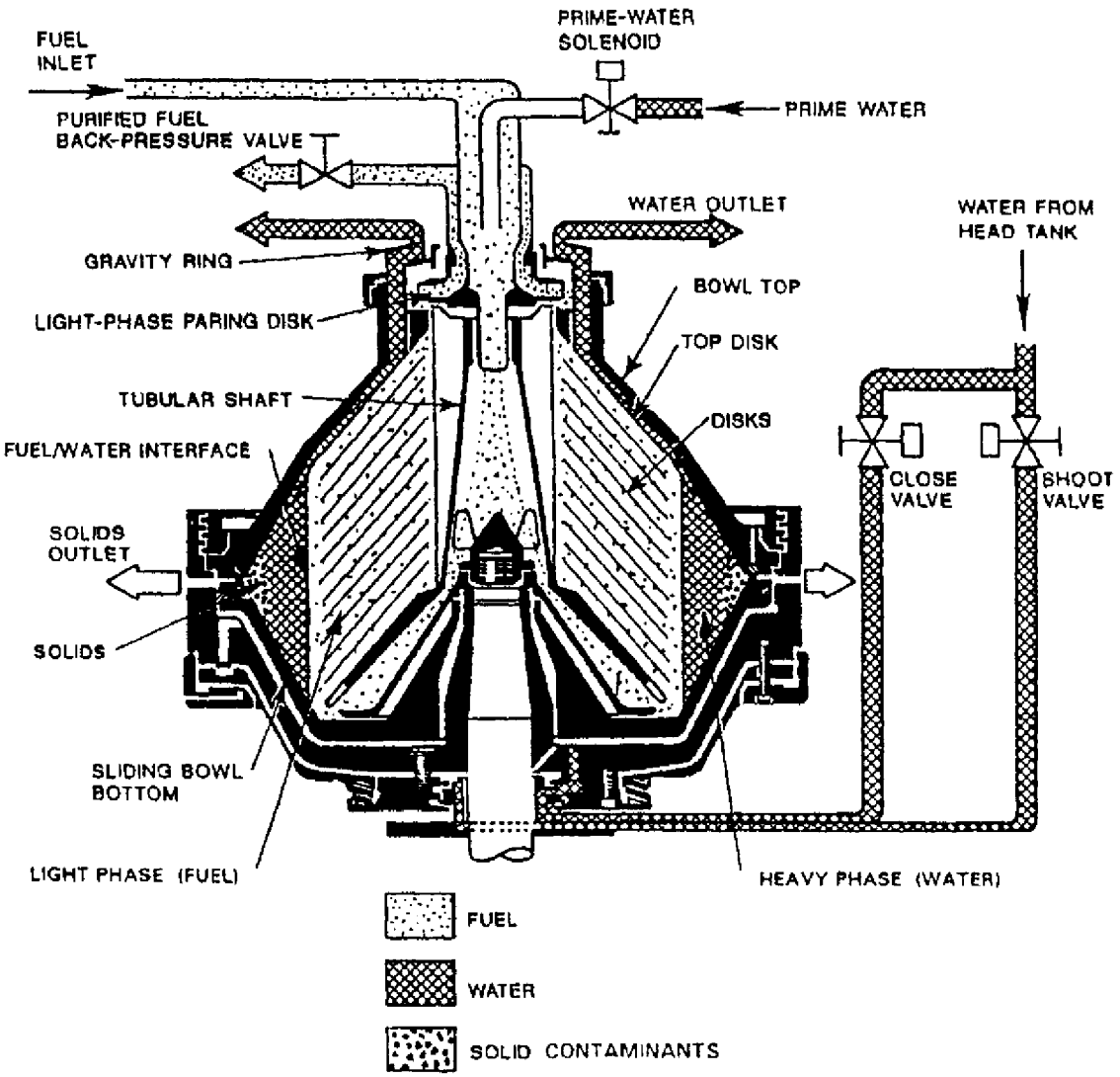

Figure 541-9-5 Flow and Operation of Purifier (Self-Cleaning)

541-9.15.2.1.1 Bowl Assembly and Disk Stack. The bowl assembly and disk stack rotational axis is vertical. The bowl assembly is mounted on the spindle assembly, and secured with a spindle cap nut. A disk stack, installed within the bowl, is critical to purifier operation. Perforated disks refine the purification process to achieve maximum efficiency. The disks separate the contaminated fuel into thin layers, reducing the distance solids must travel for separation. Further, the disks direct the heavy phase (water) to the outer periphery of the bowl. The light phase (clean fuel) is directed to the inside periphery of the disk stack. The clean fuel travels up, through the inside of the disk stack, to a paring disk chamber.

541-9.15.2.1.2 Light-Phase Paring Disk. The paring disk chamber houses the light-phase paring disk. The paring disk is mounted on the axis of rotation and functions similarly to a pump impeller. The paring disk chamber containing the clean fuel revolves around the stationary paring disk. The spinning fuel is forced into the ports along the edge of the paring disk, creating a pumping action. This pumping action forces the fuel back into the ship's fuel system. (This function is performed by a skimmer assembly on Sharples-Stokes purifiers.)

541-9.15.2.2 Functional Description. The purifier continuously separates the contaminants from the fuel and returns the purified fuel to the ship's fuel system. Water is continuously removed from the fuel and is passed to

a waste oil tank. Separated solids in the form of sludge are retained within the bowl during the purifying cycle. The purifier is capable of removing water from a contaminated mixture which is up to half water, half fuel. In addition, under emergency conditions, the purifier is capable of processing 100 percent of water for a period of 5 minutes, without any water discharge from the fuel discharge port.

541-9.15.3 PRIMING-WATER SEAL. Water is admitted to the bowl to establish a priming seal. The priming seal must be established prior to admitting fuel. Excess priming water discharges from the water outlet. As fuel is introduced to the bowl, the fuel displaces the water closest to the center of the bowl. During normal operation, water is displaced outside the disk stack to the outer portion of the bowl. The manually cleaned fuel purifiers on the FFG 7 and DD 963 classes require the addition of priming water prior to starting the purifier motor. The self-cleaning purifiers require the purifier to be at full operating speed prior to admitting seal water.

541-9.15.4 PURIFICATION OF FUEL. Contaminated fuel is admitted through the inlet of the inlet/outlet connection and inlet/outlet housing. Flow continues down through the tubular shaft and enters the bowl and disk stack assembly through the bottom of the bowl. The fuel fed to the bowl assembly fills the area between the fuel/water interface and the inside edge of the disk stack. The clean fuel travels upward in the passage between the tubular shaft and the fuel/water interface.

541-9.15.4.1 Phase Separation. Since fuel (light phase) is lighter than water (heavy phase), the fuel floats against the layer of water and flows upward, filling the spaces between the disks. The water (heavy phase) is displaced to the outer area of the bowl. The fuel (light phase) forms a layer in the inner portion of the bowl. The light-phase and the heavy-phase layers meet at the fuel/water interface. The purified fuel is discharged through the clean fuel discharge connection by the light-phase paring disk.

541-9.15.4.2 Fuel/Water Interface. Centrifugal separation of fuel and water requires a controlled, properly positioned, fuel/water interface. Water and solids removed from the contaminated fuel pass through this interface. This interface is shown in Figure 541-9-5. This vertical interface is located beyond the outer edge of the disk stack and extends from the bottom of the bowl to the outer edge of the top disk.

541-9.15.4.3 Gravity Ring. The location of the fuel/water interface will vary with different specific gravity fuels. The gravity ring on an Alfa-Laval purifier is installed to control the location of the fuel/water interface, compensating for these variations in specific gravity.

541-9.15.4.3.1 Guidance for selecting the correct gravity ring is included in each purifier's technical manual. (This function is performed by a ring dam on Sharples-Stokes purifiers.)

541-9.15.4.3.2 If the gravity ring is too large, the interface moves toward the outer portion of the bowl. The result is better solids removal but less-efficient water removal. However, this increases the likelihood of loss of water seal (called breakover). If the gravity ring is too small, the interface moves inward toward the center of the bowl. The result is better water removal but less-efficient solids removal.

541-9.15.4.4 Solid Contaminant Removal. The heavier solids and sludge are driven outward through the fuel/water interface. Solids are then deposited on the inside wall of the bowl. Solids also collect within the disk stack on the underside of each disk. The centrifugal purifier can only remove solid contaminants that are heavier than both fuel and water. Contaminants that are as light or lighter than fuel cannot be removed by a centrifugal purifier.

541-9.15.4.5 Water Removal. Water is continuously extracted from the fuel. The extracted water is driven outward through the fuel/water interface and is added to the heavy phase (water layer) in the outer part of the bowl. Water is discharged between the top disk and the bowl top and exits through the water outlet. It is important to note that the extracted water does not move the fuel/water interface into the disk stack.

541-9.15.5 PURIFIER CLEANING (REMOVAL OF SLUDGE). Throughout the process of purifying fuel, solid contaminants build up on the inside surface of the bowl and disk stack. Periodically, purifiers must be disassembled and manually cleaned to remove the sludge buildup in the bowl assembly and disk stack.

541-9.15.5.1 Self-Cleaning. Alfa-Laval self-cleaning purifiers are capable of removing a large percentage of accumulated solid contaminants from the wall of the bowl assembly. The self-cleaning cycle will loosen and remove some solids from the disk stack also, but will not thoroughly clean the stack. This cleaning operation is known as shooting the bowl . The self-cleaning shoot cycle does not require disassembling the purifier to remove solids. Self-cleaning purifiers are disassembled much less frequently than manually cleaned purifiers at intervals specified by PMS. Only Alfa-Laval self-cleaning purifiers can perform the following self-cleaning function.

541-9.15.5.2 Self-Cleaning Shoot Cycle. The sequence of events during a shoot cycle is primarily automatic. When the operator initiates the shoot cycle, a diverter valve located before the purifier redirects fuel flow back to the fuel transfer pump suction. Two water-operating control valves, the shoot valve and the close valve, control water pressure in passages under the sliding bowl bottom. These two control valves, acting together, can move the sliding bowl bottom up and down, opening and closing the solids outlet.

541-9.15.5.3 During the shoot cycle, the sliding bowl bottom is lowered, and the solids outlet is opened momentarily. Centrifugal force causes water and solid contaminants to discharge through the opening into the sludge discharge volute in the bowl's outer wall. The ejected sludge is passed to the waste oil system. The bowl automatically recloses before the fuel/water interface reaches the outer edge of the top disk. This prevents fuel from being discharged from the water outlet or the solids outlet. The bowl is then automatically reprimed with water before fuel flow is reestablished.

541-9.15.6 DENSITY OF CONTAMINANTS. Centrifugal purifiers work by separating higher-density contaminants from the fuel. The purifier removes water and most solid contaminants since they are heavier than fuel. No contaminants of the same density as fuel or less (such as lightweight solids or certain fuels mixed with the F-76) will be removed.

541-9.15.7 OPERATION. Refer to the purifier technical manual for detailed operating and maintenance instructions.

541-9.15.7.1 Precautions

CAUTION

Be sure the purifier drain tank is pumped down before starting the purifier. If the drain tank is overfilled, it may flow back into the purifier and necessitate changing the purifier lube oil.

CAUTION

Priming the bowl with water at the start of each run is essential to operating the purifier. Priming water shall be introduced when the purifier motor is energized (either with a clean or a dirty bowl) and shut off when discharge water is viewed through the observation port.

a. Use the proper size gravity ring or ring dam.

b. Before starting, be sure the bowl lock screws are backed out, plugs are inserted, cover clamps are tight, and the valves are properly aligned.

c. Occasionally check the bowl speed on Alfa-Laval purifiers, using the speed indicator assembly. Never open covers while the bowl is running. Sharples-Stokes purifiers have no provisions for checking bowl speed.

d. Check the oil level, using the oil-level gauge (dipstick) and oil sight gauge (observation port).

e. Apply the brake only in an emergency. Be sure the brake is off before starting.

f. If the machine does not come up to operating speed within 12 minutes after starting, shut it down and determine the cause.

CAUTION

Frequent restarts may damage the purifier motor. Do not attempt to restart within 1/2 hour after rotation wind-down. If the purifier is to be run again within 1/2 hour, place the unit in standby mode or align it to recirculate the standby service tank (see paragraph 541-6.2.4.2) rather than shutting down the purifier.

541-9.15.7.2 Placing the Purifier in Standby. High-capacity purifiers can be placed in a standby mode. While the purifier is in standby, fuel to the purifier is secured and normal operating speed (r/min) is maintained.

541-9.15.7.2.1 Prior to placing the purifier in standby mode, a self-cleaning purifier requires that a bowl cleaning operation and repriming operation be performed.

541-9.15.7.2.2 The standby procedures shall be followed without deviation to prevent overheating of the inlet and outlet housing materials. If conducting the standby operation is impossible, shut down the purifier and do not restart for at least 1/2 hour after rotation wind-down.

541-9.15.8 MAINTENANCE

541-9.15.8.1 Precautions

a. Keep the entire machine clean and, in particular, clean the hole and driving bushing in the bowl shell and the end of the spindle before assembling.

b. Be sure all rubber rings and seals are assembled in their respective places. On Alfa-Laval purifiers, make sure that the regulating tube and paring disk are secured to the inlet assembly.

c. Before each reassembly, lubricate contact areas and the threads of the bowl coupling ring, bowl shell, and coupling nut.

541-9.15.8.2 Troubleshooting. If poor performance, rough running, or unusual noises from the purifier are detected, check for probable causes from the following lists.

541-9.15.8.2.1 Poor Performance. Poor performance of the purifier may be caused by:

a. Speed too low.

b. Improper bowl assembly.

c. Bowl not clean.

d. Disk stack assembly not clean.

e. Wrong size gravity ring or ring dam.

f. Leaky bowl ring, discharge ring, or ring dam.

g. Obstruction in center tube of purifier.

h. No water seal.

i. Wrong bowl height.

j. Improper inlet or discharge pressure.

k. Improper disk compression.

541-9.15.8.2.2 Rough Running or Unusual Noise. Rough running or noise may be due to:

a. Improper oil level.

b. Damaged or worn running parts.

c. Bowl out of balance.

d. Bowl not properly seated on spindle.

e. Improper motor/purifier alignment.

f. Wrong bowl height.

g. Wrong spindle height.

SECTION 10.

PETROLEUM FUELS: PRODUCTION, SAMPLING, AND TESTING

541-10.1 INTRODUCTION

541-10.1.1 BACKGROUND. This section provides background on petroleum fuel production, fuel properties, fuel preference, and fuel sampling and testing procedures.

541-10.2 PETROLEUM FUEL PRODUCTION

541-10.2.1 REFINING OF CRUDE OIL. The source of Naval Distillate Fuel and other petroleum-derived products is crude oil. By distilling the crude oil, the various components that make up the crude can be separated according to their boiling points. The main fractions separated during crude distillation, in order of increasing boiling point are: fuel gas (essentially methane and ethane), LPG gas (propane and butane), naphtha (gasoline blends), gas oils (jet and diesel fuel stock), and residuum. The residuum may be further processed to increase the total yield of gasoline fractions or used to produce heavy fuel oils, lube-oil stock, or asphaltic compounds.

541-10.2.2 DISTILLATE FUELS. Distillate fuels can be divided into three categories: jet fuels, diesel fuels, and heating oils. Heating oils are not discussed in this chapter.

541-10.2.2.1 Jet Fuels. Jet fuels can be divided further into gasoline-type and kerosene-type fuels. Gasoline-type jet fuels are characterized by low pour points and high flammability. Kerosene-type fuels have higher freezing points and are less flammable than gasoline-type blends. The only kerosene-type jet fuel permitted on board naval ships is JP-5 (NATO Code F-44) in accordance with MIL-T-5624, Turbine Fuel, Aviation, Grades JP-4, JP-5, and JP-5/JP-8 ST. This fuel has a flashpoint of 140°F (60°C) minimum and was developed for relatively safe storage aboard ship, as compared to the earlier, gasoline-type jet fuels. The storage, handling, and use of JP-5 for aviation fuel systems is covered in NSTM Chapter 542, Gasoline and JP-5 Fuel Systems .

WARNING

Under no circumstance shall JP-4 or JP-8 turbine fuel be taken on board Naval ships. These jet fuels have flashpoints below the 140°F (60°C) minimum required for shipboard use and cannot be safely stored on board.

541-10.2.2.2 Diesel Fuels. Diesel fuels are blended from higher-boiling stocks than jet fuels. The primary fuel used in all Naval shipboard power plants, including diesel, gas turbine, and boiler plants, is naval distillate fuel (NATO Code F-76) conforming to MIL-F-16884, Fuel, Naval Distillate .

541-10.2.2.2.1 F-76 Fuel. When identifying a fuel product conforming to MIL-F-16884, the NATO symbol F-76 shall be used. This term is recognized by all NATO, Southeast Asia Treaty Organization (SEATO), and Central Treaty Organization (CENTO) nations as a specific shipboard fuel. F-76 is also a product description familiar to international and other oil companies. F-76 is a kerosene-type distillate with a minimum flashpoint of 140°F (60°C) and a pour point of 20°F (-7°C) maximum.

CAUTION

F-76 fuel shall not be confused with commercial fuel marketed in the Mediterranean and other overseas areas as Marine Diesel Fuel. Marine Diesel Fuel may contain up to 10 percent of residual (black) fuel, and its use may result in contaminated fuel storage tanks.

541-10.2.2.2.2 F-75 Fuel. A similar distillate fuel, called Fuel, Naval Distillate Lower Pour Point, NATO Code F-75, has a pour point of 0°F (-18°C). Although the U.S. has no specification fuel standardized under NATO Code F-75, F-75 is an acceptable substitute fuel for F-76 in all naval shipboard power plants. In addition, fuels designated F-76 and F-75 are compatible and can be blended in all proportions.

541-10.3 FUEL PROPERTIES

541-10.3.1 GENERAL. The suitability of a fuel for Navy use is dependent on a number of characteristics related to the physical or chemical properties of the fuel. Following is a glossary of important fuel properties:

541-10.3.2 API/SPECIFIC GRAVITY. Knowing the American Petroleum Institute (API) gravity, or specific gravity, of a fuel is essential for load distribution purposes and for a number of calculations, including estimating the heating value of the fuel. The specific gravity of a fuel is the ratio of the weight of a given volume of the fuel to the weight of an equal volume of water at 60°F (15.6°C). The API gravity of a fuel is used by most commercial oil industries in the United States. Both API gravity and specific gravity are determined by using an instrument called a hydrometer. The experimental procedure for API/specific gravity measurement is further discussed in paragraph 541-10.9.2.7.

541-10.3.3 CALORIFIC OR HEATING VALUE. The quantity of energy released by burning a unit amount of fuel is known as the calorific or heating value. The units commonly used are British thermal units (Btu) per pound or gallon of fuel.

541-10.3.3.1 In the United States, calorific values are quantified as the higher heating value (HHV). By laboratory testing, the heating value or Btu's per pound of fuel can be accurately determined using a sophisticated test apparatus called a bomb calorimeter. In this test, a known quantity of fuel and oxygen is ignited in a steel vessel under pressure, and the heating value is computed using the temperature rise measured during the reaction. A mathematical formula relating fuel density (or °API gravity) to HHV (Btu/lb) has been developed using bomb calorimeter data:

$$HHV(Btu/lb) = 17{,}601 + (53.1 \times {}^\circ API @ 60^\circ F)$$

NOTE

In Europe heating values are often quantified as the lower heating value (LHV). LHV's are approximately 1100 Btu/lb lower than HHV's for the same fuel.

541-10.3.3.2 Fuel is usually purchased by volume, but most engineering calculations of heating value are based on weight. Thus, the API gravity of the fuel should be determined accurately. Although a pound of lighter fuel has a higher heating value than a pound of heavy fuel, a gallon of lighter fuel is usually lower in heating value

than a gallon of heavy fuel because a gallon of lighter fuel has fewer pounds of fuel. Fuels with a low calorific value yield less power than the same amount of a high calorific-value fuel.

541-10.3.4 VISCOSITY. Viscosity can be defined as a fluid's resistance to flow. Fluids with high viscosities (such as engine oils) flow slowly; fluids with low viscosities (such as F-76 fuel) flow comparatively quickly. Fuel viscosity becomes important when considering such parameters as ease of pumping from storage tanks and atomization performance at burner fronts. Viscosity is expressed in kinematic or absolute terms. The most commonly used units of viscosity are the centistoke (cSt) for kinematic and centipoise (cp) for absolute. The preferred unit for fuel testing is the centistoke. Kinematic viscosity is related to absolute viscosity by the equation:

$$\text{Kinematic Viscosity (cSt)} = \frac{\text{Absolute Viscosity (cp)}}{\text{Specific Gravity}}$$

541-10.3.4.1 The most accurate means for determining viscosity is the kinematic technique applied according to the American Society of Testing and Materials (ASTM) Method D-445, Standard Test Method for Kinematic Viscosity of Transparent and Opaque Liquids (and the Calculation of Dynamic Viscosity) . In this procedure, viscosity is determined by measuring the time in seconds required for a given quantity of liquid to flow through a calibrated capillary tube at the test temperature. Since viscosity is highly temperature-dependent, the test temperature is precisely regulated.

541-10.3.4.2 When plotted on ASTM viscosity/temperature paper, the viscosity of a normal fluid will typically follow a straight line. The viscosity/temperature plots for F-76 and JP-5 fuel are presented in Figure 541-10-1.

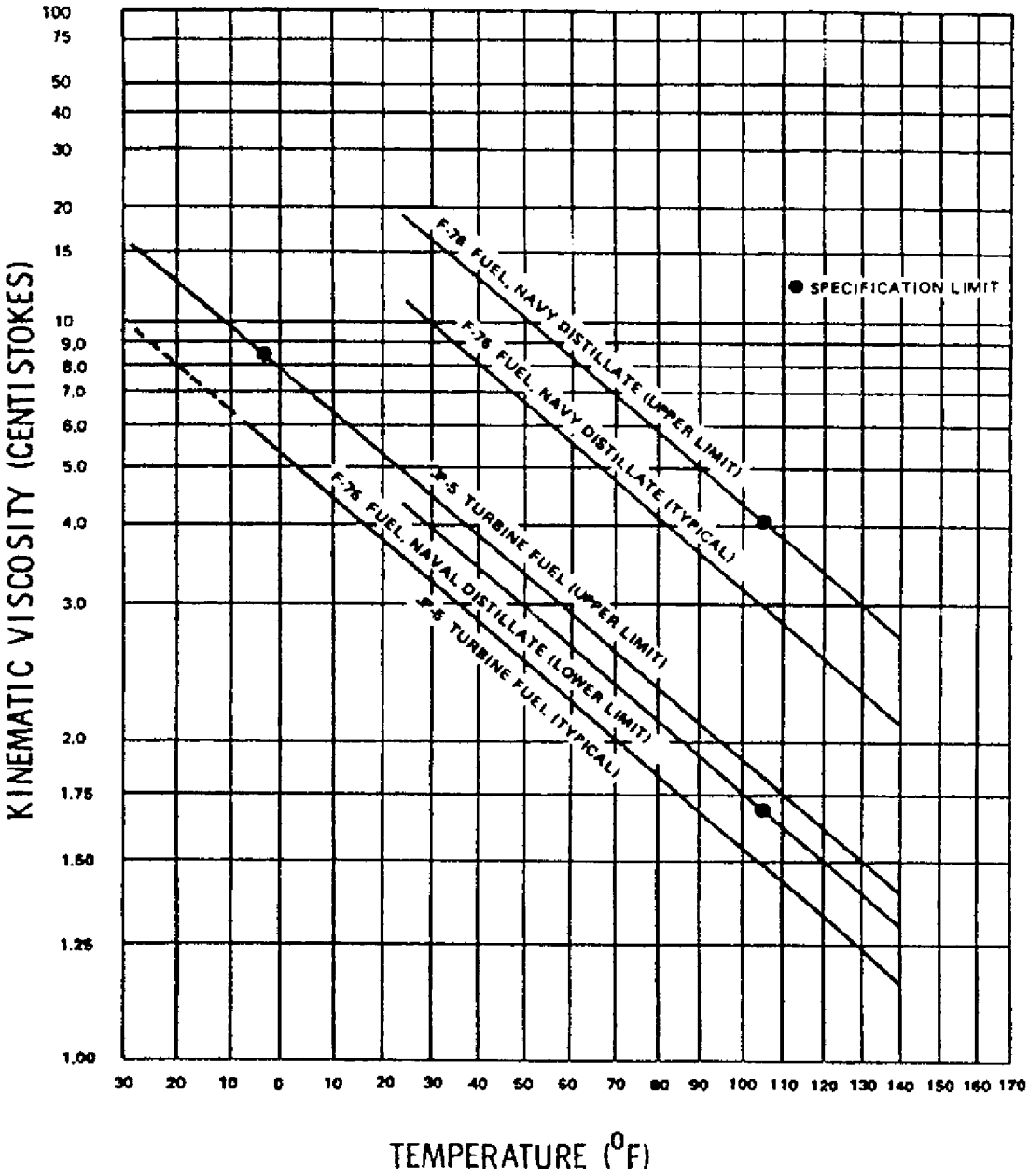

Figure 541-10-1 F-76 and JP-5 Viscosity - Temperature Curves

541-10.3.5 CLOUD POINT/POUR POINT. As petroleum fuels are cooled, the larger paraffin molecules present in the fuel begin to bond together and form wax. The cloud point is defined as that temperature at which this aggregation of molecules becomes apparent as a visible clouding or haze in the sample. If the sample is cooled further, a temperature will be reached at which the fuel will no longer flow. This temperature is defined as the **pour point** of the fuel. Both cloud point and pour point indicate the amount of long-chain paraffin present in the fuel. The cloud point for distillate fuels is usually about 10°F (5°C) higher than the pour point.

541-10.3.6 FLASHPOINT. The flashpoint is defined as the lowest temperature at which enough vapor is present above the surface of the test liquid to be ignited by a test flame under controlled conditions. Flashpoint can be used to indicate the flammability of a fuel for storage and safety purposes. The most commonly used

method for determining flashpoint is ASTM D-93, Standard Test Method for Flashpoint by Pensky-Martens Closed Tester . This method is discussed in more detail in paragraph 541-10.9.2.6.

541-10.3.7 CETANE NUMBER. The cetane number is a measure of the ignition quality of diesel fuels. It is analogous to octane number in gasoline. In the laboratory environment the cetane number is determined by comparing the ignition quality of the test fuel in a standard test engine to that of cetane. The ignition quality of a fuel is dependent, to a certain extent, on the chemical makeup of the fuel. Since the ignition characteristics of a fuel directly affect the overall performance of the fuel in a diesel engine, cetane number is an important fuel property.

541-10.3.8 CETANE INDEX. Since the laboratory testing of diesel fuels for cetane index is time-consuming, methods have been developed for calculating the cetane number based on other, more easily measured properties such as API gravity and midpoint boiling range. This quantity, termed the cetane index, is calculated using the formulas found in ASTM D-976, Standard Test Methods for Calculated Cetane Index of Distillate Fuels .

541-10.3.9 SULFUR CONTENT. The amount of sulfur present in a fuel is important for several reasons. During the combustion process, sulfur-containing compounds in the fuel may be converted to sulfur dioxide; in the presence of water, corrosive sulfuric acids form, and they can damage the internal components of engines. Sulfur content also affects the calorific value of the fuel. If all other parameters remain constant, the calorific value of the fuel decreases as the amount of sulfur in a fuel increases.

541-10.3.10 ASH CONTENT. The ash content of a fuel is a measure of the amount of noncombustible (or inorganic) material present in the fuel. Heavy metals, such as vanadium, can cause severe corrosion of gas-turbine-blade alloys, and elements such as calcium can lead to deposits in gas turbines. Lead can also contribute to corrosion.

541-10.3.11 COLOR. As distillate fuels age, they darken through the formation of oxygen-catalyzed sludge. Dark distillate fuels usually indicate products with reduced storage stability.

541-10.3.12 APPEARANCE. Good quality fuel will be clear and bright. The term clear refers to the absence of visible particulate matter in the sample. The term bright refers to the absence of visible suspended water in the sample. As the amount of suspended water in the fuel increases, the sample becomes hazy or cloudy. This process is discussed in more detail in paragraph 541-10.9.2.1.

541-10.3.13 COMPARISON OF PROPERTIES. Table 541-10-1 presents a comparison of fuel properties for various fuel specifications.

Table 541-10-1 COMPARISON OF FUEL SPECIFICATION REQUIREMENTS[1]

Test Name	F-76	JP-5	DF2 CONUS	DF2 OCONUS
Cetane Number, max	45	R[2]	40	45
Appearance	C&B[3]	C&E	C&B	C&B
Flashpoint, min °F	140	140	126[4]	132[4]
Pour Point, max °F	21	-51	R	R
Viscosity @ 100°F: Minimum cSt Maximum cSt	1.7 4.3	- -	1.9 4.1	1.8 9.5

Table 541-10-1 COMPARISON OF FUEL SPECIFICATION REQUIREMENTS[1] - Continued

Test Name	F-76	JP-5	DF2 CONUS	DF2 OCONUS
API Gravity @ 60°F: Minimum Maximum	R R	36 48	R R	R R
Distillation Points: 10% Point °F 50% Point °F 90% Point °F Final boiling pt °F	R R 675 725	400 R R 626	- R 640 698	- R 675 698
Ash Content, % max	0.005	-	0.010	0.020
Sulfur, % max	1.00	0.40	0.50	0.70
Particles, mg/L max	10	-	10	10

[1] Data sources: MIL-F-16884H (for F-76 fuel), MIL-T-5624M (for JP-5 fuel), and Fed-Spec VV-F-800C(for DF2 CONUS, and DF2 OCONUS fuels).[2] R denotes a record-only requirement.[3] C&B denotes clear and bright.[4] Refer to paragraph 541-10.4.4.1 for restrictions on any fuel with a flashpoint below 140°F.

541-10.4 SHIPBOARD FUEL PREFERENCE

541-10.4.1 ORDER OF FUEL PREFERENCE. Shipboard fuel shall be procured in the order of preference depicted in Figure 541-10-2. The definitions of primary, acceptable substitute, and emergency substitute fuels are provided in the following paragraphs.

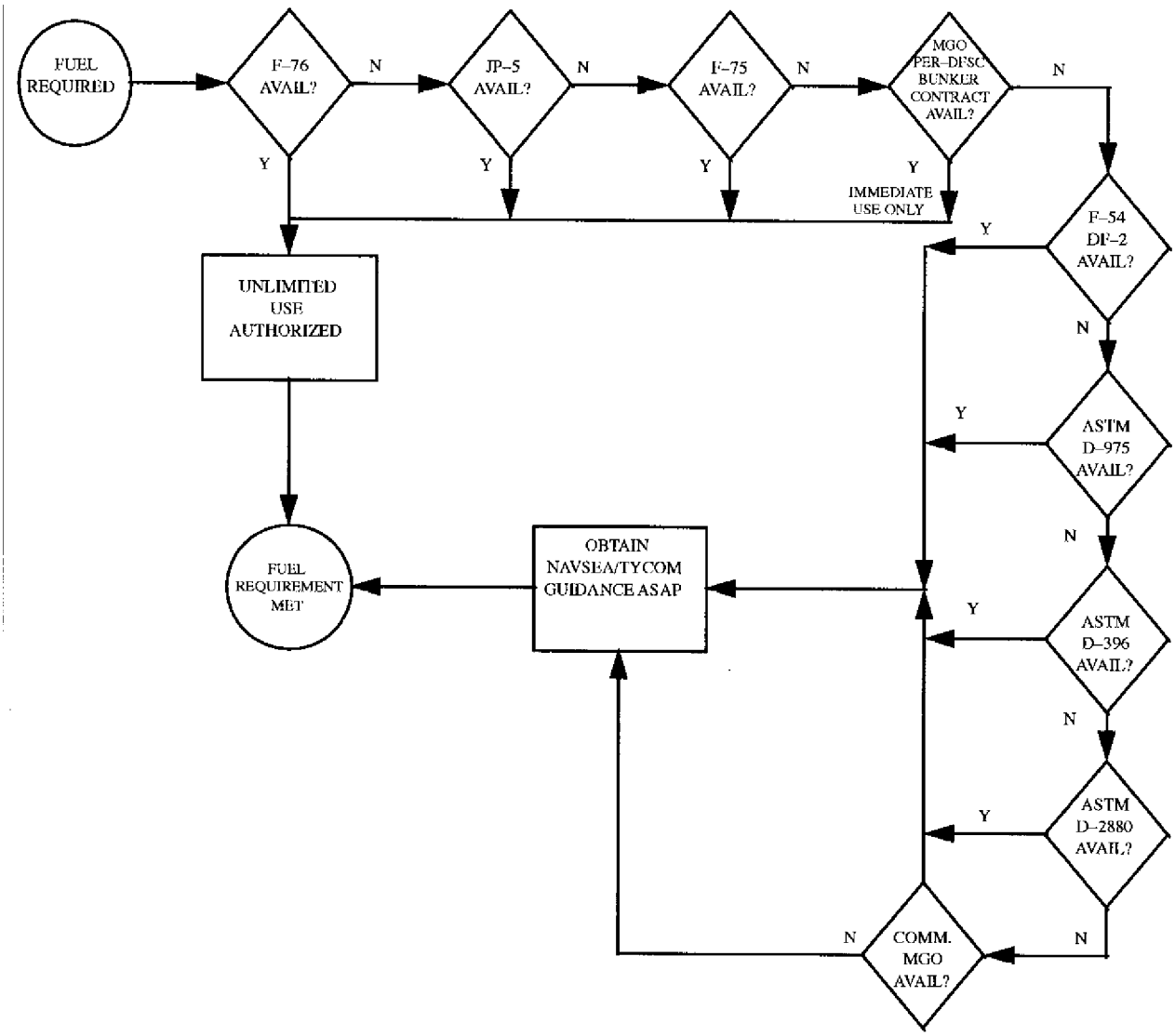

Figure 541-10-2 Shipboard Fuel Selection Guide

541-10.4.2 PRIMARY FUEL. The primary fuel for use in all shipboard power plants (diesels, gas turbines, and steam boilers) is naval fuel distillate (NATO F-76), conforming to MIL-F-16884.

541-10.4.3 ACCEPTABLE SUBSTITUTE FUELS. The NATO definition of an acceptable substitute fuel product is one that may be used in place of another product for extended periods of time without technical advice. The authorized acceptable substitute fuels for F-76, in order of preference, are JP-5 (NATO F-44), conforming to MIL-T-5624, NATO F-75, and Commercial Marine Gas Oil (MGO) (100-percent distillate, no residual) under a Defense Fuel Supply Center (DFSC) bunkers contract. MGO contracts for bunkers under naval regional contracting centers and Navy contracting departments are acceptable provided they comply with the NAVSEASYSCOM purchase description and are 100 percent distillate containing no residuals. MGO is not considered an acceptable substitute for applications which involve long-term storage (6 weeks or greater), such as emergency diesel generators on submarines, because MGO does not have a storage stability requirement as defined for F-76 in MIL-F-16884. Hence, the MGO taken onboard must be used immediately.

NOTE

Products containing residual fuel are unacceptable for use in shipboard power plants.

541-10.4.3.1 Sources of MGO under a DFSC bunkers contract are listed in NAVPETOFFINST 4290.1, Commercial Contracts for Bunker Fuel (see paragraph 541-10.6.4) or on DFSC's internet homepage at http://www.dfsc.dla.mil/. MGO supplied under a DFSC bunkers contract complies with the NAVSEASYSCOM's purchase description and can be procured under national stock numbers 9140-01-313-7776 (domestic) and 9140-01-417-6843 (overseas).

NOTE

All fuel accepted onboard shall meet the requirement of 140°F minimum flashpoint.

541-10.4.4 EMERGENCY SUBSTITUTE FUELS. The NATO definition for an emergency substitute fuel is one that may be used in an emergency only, in place of another product, after local exploration of the adequacy of the product, using locally available technical manuals and personnel. The allowable emergency substitute fuels, in order of preference, are ASTM D-975, 2D or ASTM D-396, No.2; ASTM D-2880, 2GT, and Commercial Marine Gas Oil (MGO), 100-percent distillate, from a commercial supplier not under a DFSC bunkers contract (local purchase). Products containing residual fuel are unacceptable for use in shipboard power plants.

NOTE

Emergency substitute fuels may contain additives not permitted under MIL-F-16884. These additives may degrade coalescer/separator performance. As a result, water in the fuel may pass through the unit as fine droplets, adversely affecting gas turbine and diesel operation.

541-10.4.4.1 Emergency substitute fuels, by specification, might have an unacceptable flashpoint lower than the 140°F (60°C) minimum required for F-76 and JP-5. Before such fuels are loaded on board, shipboard tests shall be verified by laboratory test to ensure that a fuel with a minimum flashpoint of 140°F (60°C) is received. An emergency substitute fuel shall not be taken on board ship until a representative sample has been tested for BS & W, density, and flashpoint in accordance with Table 541-10-2. The mixing of emergency substitute fuels with acceptable bunkerings is not recommended. It is good engineering practice to use emergency substitute fuel only in emergencies and to obtain guidance as soon as possible if prior guidance cannot be obtained. Any emergency fuel taken onboard must be used immediately.

Table 541-10-2 SHIPBOARD SAMPLING AND TESTING REQUIREMENTS FOR F-76 FUEL[1]

Fuel Source	Frequency	Sample Location	System S	System GT	System D	Test(s)	Limits
Supplier's Delivery Tank	Each receipt from a commercial supplier or Every time emergency substitute fuel is received	Thief/ all level	X	X	X	Flashpoint	140°F (min)
			X	X	X	API gravity	Record
			X	X	X	BS & W[8]	0.05% (max)
Deck Connection	Each refuel - at start, midpoint, and finish	Line/deck connection	X	X	X	BS & W[8]	0.1% (max)
	Every 15 minutes at each refuel	Line/deck connection	X	X	X	Visual	541-10.7.2
Ship Storage[2]	24 hours after receiving fuel	Sounding/ bottom	X	X	X	Water indicating paste	Paragraph 541-10.8.3
	Before transfer to service tank	Thief/ bottom	X		X[7]	BS & W[8]	0.1% (max)
		Sounding/ bottom		X	X	Water indicating paste	Paragraph 541-10.8.3
	After stripping	Thief/ bottom	X	X	X	BS & W[8]	0.1% (max)
	Weekly	Sounding/ bottom		X		Water indicating paste	Paragraph 541-10.8.3
	Monthly	Sounding bottom	X		X	Water indicating paste	Paragraph 541-10.8.3
Gravity Feed Tanks	Monthly	See note 3		X		Visual	Clear & bright
Ship Service Tanks	Within one hour before use[9]	Thief/ bottom	X		X	BS & W[8]	0.1% (max)
				X		Visual	Clear & bright
EDG Service Tank[4]	After filling and quarterly	Thief/ bottom		X	X	BS & W[8]	0.1% (max)
Fuel Purifier	See note 5	Line/purifier discharge		X	X	Visual	Clear & bright
Filter Separator	See note 6	Line/filter separator discharge			X	Visual	Clear & bright
				X		FWD	40 ppm (max)
				X		CFD	2.64 mg/L (max)
*S:	Steam boiler	GT:	Gas Turbine			D:	Diesel

Table 541-10-2 SHIPBOARD SAMPLING AND TESTING

REQUIREMENTS FOR F-76 FUEL[1] - Continued

Fuel Source	Frequency	Sample Location	System			Test(s)	Limits
			S	GT	D		
Note 1: JP-5 (F-44) that has been downgraded to F-76 for use in ship propulsion systems shall meet the sampling and testing requirements for F-76. Note 2: No testing is required for compensated tanks, but before transferring fuel, make sure that enough fuel is available in the tank group to prevent the possibility of transfer of compensating water (ballast) to fuel service tanks. Note 3: Some gravity feed tanks are baffled into two compartments, one for emergency gas turbine supply and one for emergency SSTG supply. All compartments shall be drained for 10 seconds via the bottom drain connection. In lieu of draining, sampling is an option where low point sampling connections are provided. When samples are taken they shall meet the visual clear and bright requirements. Note 4: The emergency diesel generator (EDG) requirement also applies to infrequently operated diesel engines and gas turbines having one service tank. Note 5: The purifier discharge shall be sampled and visually tested 5 minutes after initiation of transfer and every 30 minutes thereafter. Note 6: The filter/separator discharge shall be sampled and tested 5 minutes after a service tank is placed on su ction and at least once every 4 hours during system operation. Note 7: Diesel-propelled ships without purifiers. Note 8: BS & W testing is not required if fuel passes the clear and bright test. Note 9: For ship service generators on auto start-up, tanks shall be sampled after filling or daily when not in use.							

541-10.4.4.2 NAVSEASYSCOM or TYCOM shall be consulted at the earliest opportunity when the use of emergency substitute fuel is deemed necessary. NAVSEASYSCOM or TYCOM shall determine how long the emergency substitute fuel can be used on board the ship.

NOTE

When emergency substitute fuel is obtained, NAVSEASYSCOM/TYCOM shall be consulted, and it shall be tested as described above.

541-10.5 FUEL QUALITY ASSURANCE

541-10.5.1 INTRODUCTION. Fuel is delivered to customers under direct government supervision. From processing at the contractor's refinery to delivery aboard ship at sea or shore, the government maintains a constant and dependable quality control program. Original fuel procurements for Defense Fuel Support Points (DFSP) and NATO storage points are inspected at the contractor's facility for contract and specification compliance. The government quality assurance (QA) representative shall witness the sampling, testing, and shipping of fuels going to various storage points. When unloaded at the storage point, fuel is inspected and tested by government personnel and equipment. Fuel quality surveillance is maintained by the various government facilities under a specific quality control program delineated in MIL-HDBK-200, Quality Surveillance Handbook for Fuels, Lubricants, and Related Products .

541-10.5.2 DLA CONTRACT QUALITY CONTROL PROGRAM. The DLA contract for direct delivery of fuels from a contractor's facility requires a quality control program; this program, however, is less extensive than

the QA program maintained at government-operated facilities. Each government fuel contract is under the supervision of a government QA Office. Although the fuel is verified for specification compliance before issue, the individual bunker delivery is not witnessed.

541-10.5.3 COMMERCIAL SUPPLIER NOT UNDER GOVERNMENT CONTRACT QUALITY ASSURANCE. A commercial supplier not under government contract is not required to maintain or establish a specific QA program. It is reasonable to assume, however, that each refiner or supplier maintains some QA procedure for its own needs. Whenever direct procurement is necessary, the ship is responsible for the quality and quantity of fuel accepted.

541-10.5.4 ORDER OF PREFERENCE FOR DETERMINING FUEL SOURCE. Navy-owned stocks are the most economical sources of fuel, but when Navy sources are unavailable and more than one other source is, the following source precedence shall be adhered to:

1. DLA, DFSP.
2. NATO storage.
3. Government contract and contract bulletin.
4. Commercial suppliers not under government contract (local purchase).

541-10.6 RECEIPT OF FUEL (F-76)

541-10.6.1 RECEIPT FROM NAVY-OWNED STOCKS. Fuels received from naval ships, storage tanks, and barges shall be accepted and signed for, noting the quantity and quality specified on the receiving document. This also includes JP-5 (F-44) downgraded to F-76 for use in ship propulsion.

541-10.6.1.1 Quantities received shall be determined on the basis of shore tank gauges or, when refueling at sea, by means of measurements taken on the issuing ship. Fuel in tanks is measured by either a tank gauge or a graduated sounding rod. In addition to measurements by tank gauge or graduated sounding rod, top sounding tapes may also be used if appropriate tank tables are available.

541-10.6.1.2 The receiving ship is not required to test the quality of fuel received before receipt from Navy-owned stocks. All fuel received will be accepted as conforming to Navy specifications. During receipt, however, fuel shall be sampled at the deck connection, according to paragraph 541-10.7.2 to monitor for water and sediment as required by Table 541-10-2. A fuel analysis of API gravity, flashpoint, and water and sediment content will be furnished by the Navy supply source to the Commanding Officer of the ship receiving replenishment. The responsibility for the quality of the product received from an oiler remains with the transferring ship until the receiving ship accepts the product. The oiler will be responsible for surveying any product losses resulting from the customer refusal to accept the product.

541-10.6.2 RECEIPT FROM DLA STOCKS. When Navy sources for bunkers are unavailable, DLA-owned fuel shall be used. DLA-owned bulk fuels are stored in DFSPs which are located worldwide. CINCLANTFLTINST/ CINCPACFLTINST 4026.1, Fuel Management Afloat Manual, Appendix A, provides a list of DFSPs holding DLA-owned stock.

541-10.6.2.1 The procedures for determining the quantity, quality, and acceptability of F-76 and acceptable substitute fuels from DLA stocks are the same as those for receiving fuel from a Navy source (see 541-10.6.1).

541-10.6.2.2 The procedures for determining the quantity, quality, and acceptability of emergency substitute fuels from DLA stocks are the same as those for receiving fuel from a commercial supplier not under government contract (see paragraph 541-10.6.5).

541-10.6.3 RECEIPT FROM NATO SOURCES. The procedures for determining the quantity, quality, and acceptability of fuel from NATO storage are the same as those for receiving fuel from a Navy source (see paragraph 541-10.6.1).

541-10.6.4 RECEIPT FROM A COMMERCIAL SUPPLIER UNDER GOVERNMENT CONTRACT AND CONTRACT BULLETIN. Sources of commercial fuel suppliers are listed in NAVPETOFFINST 4290.1, Commercial Contracts for Bunker Fuel. This instruction provides information on the availability of bunker fuel by location and contract number. A current copy of this notice shall be on board ship before deployment and shall be consulted for location and identification of bunker contracts. Ships intending to use government bunker contracts are cautioned to make arrangements well in advance to ensure that fuel is available when needed. Such arrangements may be made through the designated overseas liaison office, in-country support activity, U.S. Defense Attache Office (USDAO), or the embassy. The following procedures shall be followed:

1. Determine the quantity of fuel delivered at a contractor's wharf on the basis of shore tank measurements or by meter measurements if contractor facilities are so equipped. If delivery is by means of a barge, the quantity shall be on the basis of either barge measurement or meter measurement at the contractor's option. The receiving officer may have representatives to witness the tank gauges. The receiving ship shall verify for the government the quantity of fuel received under direct delivery fuel contracts. The fuel will be accepted on the same basis as is government-owned fuel. Whenever there is evidence that a delivery does not conform to contract, the Navy Petroleum Office (NAVPETOFF), 8725 John J. Kingman Rd., Suite 3719, Fort Belvoir, Virginia, shall be contacted.
2. The contractor shall provide the receiving officer with a test analysis showing that the fuel to be delivered complies with all specification requirements. Before receipt, the receiving ship shall sample the supplier's tank(s) according to paragraph 541-10.7.2.2 , and shall test for flashpoint, density, and water and sediment as required by Table 541-10-2. During receipt, fuel shall be sampled at the deck connection according to paragraph 541-10.7.2 to monitor for water and sediment as required by Table 541-10-2.
3. A 1-gallon sample representative of the quantity of product delivered shall be taken during receipt and submitted for laboratory analysis (see MIL-HDBK-200, Appendix I).

541-10.6.5 RECEIPT FROM A COMMERCIAL SUPPLIER NOT UNDER GOVERNMENT CONTRACT (LOCAL PURCHASE). If bunkering is required at commercial ports not included in NAVPETOFFINST 4290.1 or if contractual coverage is questionable, the following procedures shall be followed:

1. Submit fuel requests to the USDAO 15 days before the desired delivery date, or
2. Submit fuel requirements to the Navy Petroleum Office, 8725 John J. Kingman Rd., Suite 3719, Fort Belvoir, Virginia, at least 90 days in advance of the desired fueling date.
3. A number of commercial names and types of bunker fuels are on the world market. In emergencies, to ensure

receipt of the proper fuel, include and stress the following definitive data in the fuel order: NATO F-76, U.S.A. Specification MIL-F-16884, Fuel, Naval Distillate, a gas oil that is 100-percent distillate with a minimum flashpoint of 140°F (60°C).

4. Commercial products containing residual fuel are not permitted as either a substitute or an emergency fuel.

5 Determine fuel quantity on the basis of shore tank measurements or by a meter. If fuel is delivered by barge, determine fuel quantity by barge measurements or by meter. Establish the method used to determine quantity before delivery. The receiving officer shall have a representative present to witness the delivery and measurement of quantity.

6. Fuel quality shall be the same as for government contracts. Before receipt, the receiving ship shall sample the supplier's tank(s) according to paragraph 541-10.7.2.2, and shall test for flashpoint, API gravity, and water and sediment as required by Table 541-10-2. During receipt, fuel shall be sampled at the deck connection according to paragraph 541-10.7.2 to monitor for water and sediment as required by Table 541-10-2.

7. The Commanding Officer of the ship taking fuel is responsible for the quantity and quality of bunkers received. When fuel is ordered from shore sources for delivery by commercial barge, the quantity ordered shall not exceed the volume that the ship can receive in available storage. The cost incurred for return of fuel ordered but not taken will be billed to the ship.

8. Take a 1-gallon sample representative of the quantity of product delivered during receipt and submit it for laboratory analysis (see MIL-HDBK-200, Appendix I).

541-10.7 SHIPBOARD SAMPLING AND TESTING PROCEDURES.

541-10.7.1 TYPES OF FUEL SAMPLING. Shipboard fuel shall be sampled and tested as required by Table 541-10-2. Fuel sampling can be categorized by where the sample is obtained, as follows:

a. All-Levels Sample. Obtained by submerging a closed thief sampler to a point as near as possible to the draw-off level, then opening the sampler and raising it at such a rate that it is nearly full as it emerges from the fuel.

b. Bottom Sample. Taken on the bottom surface of the tank at its lowest point. The bottom sample is usually obtained to check for water, sludge, scale, and other contaminants.

c. Line Sample. Obtained from a designated location within the fuel system while the fuel is flowing.

d. Sounding Sample. Obtained by using a sounding tape and water-indicating paste to determine the water level within the tank.

541-10.7.2 SAMPLING DURING FUEL (F-76) RECEIPT. To ensure that fuel received on board is clean, the receiving ship shall draw samples at the filling connection during receipt as required by Table 541-10-2. At least one sample at the beginning, one in the middle, and one at the end shall be tested for BS & W. Additional samples shall be taken every 15 minutes and visually inspected for free water using the clear and bright test procedure. If a sample indicates the presence of free water, the delivery shall be discontinued (after appropriate coordination with shore personnel) until the cause can be found and corrected.

541-10.7.2.1 When fuel is received from fleet oilers, the oiler shall be questioned about fuel cleanliness when samples show free water, are hazy or milky because of water, or contain excessive solids that cover the bottom of the sample container. Even ships with seawater compensated storage tanks shall be concerned about water.

541-10.7.2.2 When fuel is received from a commercial source, samples shall be taken as prescribed in the contract. If a sample method is not stated in the contract or a contract does not exist, the samples shall be obtained in accordance with ASTM D-4057, Manual Sampling of Petroleum and Petroleum Products . Acceptance or rejection of fuel delivered to the ship shall be based on either an all-levels or an average sample taken from the supplying tank(s). In all cases, the container shall be thoroughly cleaned before use.

541-10.7.3 SAMPLING EQUIPMENT. Equipment required for sampling fuel tanks is listed in Table 541-10-3. Paragraphs 541-10.7.3.1 through 541-10.7.3.3 provide concise instructions for use of that equipment. More detailed procedures are provided with the individual equipment.

Table 541-10-3 SAMPLING EQUIPMENT

Item	Description	NSN
Measuring Tape, Tank Gauging Type, with Reel and Swivel Snap	1/2 in x 100 ft	5210-01-357-4178
Gauging Tape Blade	25 ft	5210-00-293-1739
Gauging Tape Blade	50 ft	5210-00-347-2613
Gauging Tape Blade	75 ft	5210-00-347-2591
Gauging Tape Blade	100 ft	5210-01-355-3806
Tape Reel Wipers, Set with 6 Spare Pads	-	5210-01-357-2593
Fuel Thief (6 in x 1-1/8 in)	60 mL	6695-01-356-8182
Fuel Thief (10 in x 1-1/8 in)	120 mL	6695-01-356-8181
Fuel Thief (12 in x 3/4 in)	132 mL	6695-01-356-6965
Seawater Test Strips	50	6680-01-359-0402
Wiper Pad Replacements	6 spare pads	5210-01-357-2594
Brass Plumb Bob	20 ounce	5210-00-238-1734
Water-Indicating Paste	3-ounce tube	6850-00-001-4194
Bottle, Glass	32 ounce	8125-00-378-9994
Equipment Instructions	1 set	

541-10.7.3.1 Fuel Thief. A typical fuel thief sampler is shown in Figure 541-10-3. Every fuel thief listed in Table 541-10-3 can be used in properly installed standard Navy, 1-1/2 inch diameter sounding tubes. The 120-mL fuel thief should meet the needs of most applications. The 132-mL fuel thief may be used where a larger sample volume is required. Use the 60-mL fuel thief where sounding tubes are installed with any bend radius less than 10 feet. The size of the fuel thief selected will depend on the sounding tube construction of the ship. Sounding tube design and construction vary considerably with ship class. Before purchasing a fuel thief, ships force should ensure that the selected fuel thief will be able to travel the full length of the sounding tube.

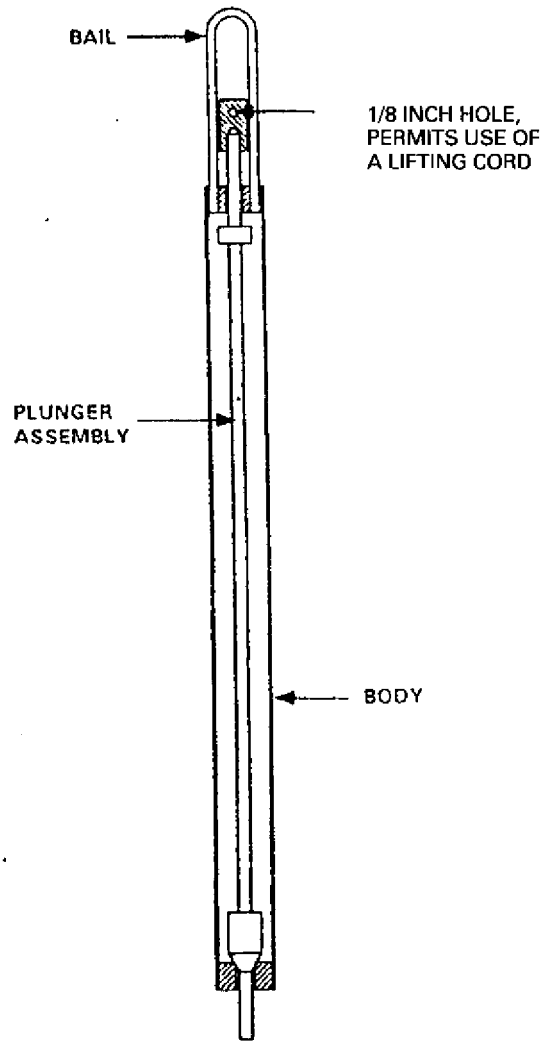

Figure 541-10-3 Fuel Thief Sampler

541-10.7.3.1.1 Fuel samples are retrieved by inserting the fuel thief into a fuel tank's sounding tube. To insert the fuel thief down the sounding tube, attach the oil-gauging tape to the bail of the fuel thief. The fuel thieves listed in Table 541-10-3 may be used for bottom sampling or for sampling at any level of the tank.

541-10.7.3.1.2 To retrieve a bottom sample, insert the fuel thief into the sounding tube until it strikes the bottom of the tube (or tank).The plunger assembly will then be pushed up, opening the fuel thief, and allowing the fuel to flow into the body of the fuel thief.

541-10.7.3.1.3 To obtain a sample from any level other than the bottom, the fuel thief contains a 1/8-inch hole at the top of the plunger assembly to which a lifting cord can be attached. This enables the plunger to be lifted at any level in the tank. Pulling the cord opens the valve and allows fuel to fill the sampler. Releasing the cord closes the valve and allows the sample to be drawn.

541-10.7.3.1.4 In the event of leakage, the fuel thief may be repaired as follows:

1. Rinse the fuel thief thoroughly with fresh water.
2. With the power turned off, set the drill press speed at 3,000 to 3,500 r/min.
3. Invert the fuel thief with the plunger facing upward. Insert the plunger into the drill press chuck and tighten.
4. While holding the fuel thief body tightly, turn the drill press on and apply 3 to 5 pounds of downward force on the thief body for 10 seconds.
5. Remove the fuel thief, clean it, and check it for leakage. If leakage persists, repeat steps 1-4.
6. Repeat this procedure 5 times if necessary. If the problem persists, procure a new fuel thief from the supply system.

541-10.7.3.2 Water-Indicating Paste. Water-indicating paste contains a chemical dye that changes color when in contact with water. It may be used on sounding tapes in JP-5 or F-76 fuel tanks to show the presence and depth of water in the tanks. The paste can be readily wiped off the tape and has no adverse effect on the quality of the fuel. To determine if any water is present, use water-indicating paste (NSN 6850-00-001- 4194).

WARNING

Water-indicating paste contains organic amine compounds. Avoid prolonged contact with skin. Wash hands before eating or drinking.

1. Apply the paste over the tip of the plumb bob (or tape end) during the sounding operation.
2. In the presence of water, the paste will change color from white-yellow to red. The length of red corresponds to the water level in the tank.
3. The volume of water in the tank can be calculated from the ship's tank-sounding tables.

541-10.7.3.3 Seawater Test Strips. Test strips are provided with the shipboard test kit to determine if fuel is contaminated by fresh or saltwater:

1. Obtain contaminant water sample from fuel tank bottom, using appropriate sampling methods.
2. Pour 5 mL (approximately 1 teaspoon) of the sample water in a clean, dry beaker or other suitable container.
3. Place the bottom tip of the test strip into the sample.

NOTE

Expose only the tip of the test strip to sample. Keep the test strip vertical. The sample will be drawn by capillary up the test strip.

4. Observe the horizontal orange line on top of the strip. The test is completed when the orange line turns blue.
5. Observe the height of the white column in the center of the test strip. Peak indications and corresponding water types are as follow:

Test Strip Area Color	Water Type

Red	Seawater
Yellow	Brackish/brine
Green	Fresh/potable
No white column	Distilled

541-10.8 SAMPLING, TESTING, AND STRIPPING OF SHIP FUEL TANKS

541-10.8.1 GENERAL. Experience has shown that water and sediment that collect in ship fuel tanks are major contributors to the gradual deterioration of shipboard fuel service pumps, diesel engines, gas turbines, and steam boilers. Test ship fuel tanks regularly for contamination and strip them whenever contamination warrants it. Other important points are as follow:

a. Fuel samples shall represent tank contents. Sounding tubes require perforations throughout their length in a tank to obtain a representative sample.

b. Fuel quality maintenance is a continuing process because fuel tanks can be contaminated by rust particles induced by ballasting or moisture drawn in through air vents, leakage of valves and tank seams, condensation on tank surfaces, and the settling of solids and residues picked up during fuel transfer. The BS & W content cannot be assumed to remain the same as that determined during initial dockside or at-sea operations. The sampling and testing requirements throughout paragraphs 541-10.8.2 through 541-10.8.6 shall be strictly observed to ensure the continued quality of fuel stowed in shipboard tanks.

541-10.8.2 TEST CRITERIA FOR SHIP FUEL (F-76) TANKS. Fuel in ship storage and service tanks shall be tested for water and sediment contamination in accordance with Table 541-10-2.

NOTE

More frequent fuel tank testing is often required during wartime operations (that is, after the ship has been subjected to shock, near miss, depth charge explosions, direct battle damage, or collision).

541-10.8.3 FUEL STORAGE TANK TESTING. The following procedure shall be used for the sampling and testing of shipboard fuel storage tanks:

1. Establish the water level in the tank by using sounding tape and water-indicating paste as discussed in paragraph 541-10.7.3.2. If the test indicates no water or a level of water lower than the lowest known tank suction level, no further testing is required.

2. If the water-indicating paste indicates a water level higher than the lowest known tank suction level, the tank shall be stripped as discussed in paragraph 541-10.8.5.

3. After stripping, test the fuel by the BS & W test (see paragraph 541-10.9.2.2). If the sample exceeds 0.1 percent BS & W, strip the tank again. Testing and stripping shall continue until the BS & W level falls below 0.1 percent.

NOTE

The BS & W test is less restrictive than the visual clear and bright test. If fuel passes clear and bright, BS & W is not required.

541-10.8.4 FUEL SERVICE TANK TESTING. Ship fuel service tanks shall be tested within one hour before being placed on line. As indicated in Table 541-10-2, the type of testing required depends on whether a steam boiler, diesel engine, or gas turbine engine is being serviced. The intent of fuel service tank testing is to take a sample from the bottom of the tank to ensure fuel quality. Acceptable methods for obtaining a sample are:

a. Use of a thief sampler via the sounding tube.

b. Aligning of the fuel transfer/purifier pump to recirculate the tank suction via the striping tail pipe. The sample shall be taken from the transfer pump outlet/purifier inlet sampling connection.

c. Use of the installed sampling connection on the tank or an external sounding tube. Flush a minimum of 12 ounces, or as otherwise instructed, prior to taking a sample. Tank sampling connections provided on DD 963, DDG 993, and CG 47 class ships, can only be used if the sampling pipe terminus has been extended to within 3 inches of the tank bottom.

541-10.8.4.1 Steam Boilers and Diesel Engines. Take a sample from the tank bottom. Run a BS & W test; if the test results are 0.1 percent or less, the fuel is acceptable for use. If the BS & W test exceeds 0.1 percent, purify or strip the fuel tank and subsequently test it until BS & W levels fall below 0.1 percent.

NOTE

The BS & W test is less restrictive than the visual and bright test. If fuel passes clear and bright, BS & W is not required.

541-10.8.4.2 Gas Turbine Engines. Before placing the standby (or auxiliary) service tank in use, take a sample from the tank bottom and visually inspect it for clear and bright criteria (see paragraph 541-10.9.2.1). Once a clear and bright sample has been obtained, whether to resample before putting the tank in use should be based on good engineering judgment that considers the time elapsed and past experience with tank cleanliness.

541-10.8.5 FUEL TANK STRIPPING PROCEDURES. Whenever the testing of a fuel storage tank or service tank indicates excessive contamination, use the tank stripping pump to take suction from the tank through the low-suction tailpipe long enough to draw off 150 to 300 gallons. Discharge suctioned fuel to the contaminated oil settling tank (COST). If the designated fuel settling tank is too small, consider using a fuel storage tank to receive tank strippings. Continue testing and stripping from the low-suction tailpipe until a sample with an acceptable BS & W is obtained.

NOTE

The overboard discharge of fuel is not allowed. Refer to NSTM Chapter 593, Pollution Control .

541-10.8.6 GAS TURBINE SERVICE TANK RECIRCULATION. Service tank recirculation (see paragraph 541-6.2.4.2) provides a means of continuously reducing the amount of solid contamination in the fuel. Recirculate standby service tanks when the purifier discharge sample taken during tank filling is not clear and bright or when the service tank sample is not clear and bright. An increase in the prefilter or coalescer element usage rate or a filter/separator discharge fuel sample exceeding 2.64 mg/L sediment also indicates the need to recirculate fuel.

541-10.9 SHIPBOARD FUEL TESTING

541-10.9.1 PURPOSES OF TESTING. Shipboard fuel testing has three purposes:

a. To establish the level of contamination present in the fuel.

b. To ensure that the fuel can be stored safely on board ship.

c. To establish the density of the fuel for weight distribution and heating value purposes.

541-10.9.2 SHIPBOARD TESTS. The shipboard tests that may be used to establish fuel contamination levels are the clear and bright test, the bottom sediment and water (BS & W) test, the free water detector (FWD) test, and the contaminated fuel detector (CFD) or combined contaminated fuel detector (CCFD) test. Flashpoint testing may be used to verify that fuel meets the 140°F (60°C) minimum required for shipboard storage. API/specific gravity can be determined by hydrometer testing.

541-10.9.2.1 Clear and Bright Test Procedure. The term clear refers to the absence of visible particulate matter. The term bright refers to the absence of suspended water droplets that appear as haziness or cloudiness in the sample.

541-10.9.2.1.1 To perform the clear and bright test, the following equipment is required:

Item	NSN
Bottle, clear glass, 32 oz.	8125-00-378-9994
Bottle, clear glass, 8 oz.	8125-00-543-7699
Thermometer, -5 to 215°F	6685-00-242-2224

541-10.9.2.1.2 The following procedure shall be used:

1. Obtain a representative sample in a clear glass bottle. The fuel temperature shall be at least 60°F (15.6°C).

2. To test for the clear criterion, invert or swirl the sample and observe the presence or absence of visible particles. Look through the sample when examining the fuel for sediment. Visible particles, if present, will be observed in the moving fuel or the resultant vortex. The sample is clear if there is an absence of visible particles.

3. To test for the bright criterion, hold the sample in front of a good light source. The presence of suspended water will be indicated by haziness or cloudiness in the sample. As the amount of water increases, the sample will appear milky. When the fuel saturation point is reached and the fuel cannot hold additional water contamination, free water will fall to the bottom of the sample bottle. If the sample appears cloudy, allow it to sit for 5 minutes. If the sample clears from the bottom to the top, the cloudiness is due to dissolved air, and the fuel is acceptable. If the sample clears from the top to the bottom, the cloudiness is probably the result of water contamination. If the sample does not clear after 5 minutes, the sample should be warmed 25°F (14°C) in a water bath and observed. If the sample is bright, it is acceptable. If it remains hazy or cloudy, the bright criterion has not been met.

541-10.9.2.2 Bottom Sediment and Water (BS & W Test Procedure). The BS & W test, based on ASTM D-2709 provides a quantitative measurement of the level of water and sediment present in the fuel.

541-10.9.2.2.1 The following equipment is required to perform the BS & W test:

Item	NSN
Centrifuge, 110V ac/dc, complete with four placeheads and four metal cups	6640-01-119-7870
Centrifuge Tube, graduated, 100 mL	6640-00-290-4428
Graduated Cylinder, glass, 100 mL	6640-00-420-0000

541-10.9.2.2.2 The following procedure shall be used:

1. Obtain fuel sample as required.
2. Shake the sample vigorously for 30 seconds to ensure a homogeneous distribution of contaminants.
3. Quickly pour 100 mL of sample into each of two centrifuge tubes. The fuel temperature at the time of the test shall be at least 60°F (15.6°C). Tightly stopper each centrifuge tube with corks or rubber stoppers of the proper size.
4. Place the two tubes containing the samples on opposite sides of the centrifuge and whirl at 1500 r/min for 15 minutes.
5. The readings from the tubes are a direct percentage of water and sediment. To determine the BS & W of the fuel, add the readings from the two centrifuge tubes and divide by two.

541-10.9.2.3 Free Water Detector (FWD) Test Procedure. The FWD (formerly called AEL MK II) is a portable instrument designed to quantitatively detect free or mechanically suspended water in aviation distillate fuels such as JP-5. This unit consists of a view box with an ultraviolet light source, a set of standards indicating 0-, 5-, 10-, and 20-ppm water contamination, and detector pads through which the fuel sample is passed for later comparison under the ultraviolet light. The detector is capable of reliably detecting water contaminant levels in the 0-20 ppm range. The method employs a water-sensitive indicator dye (sodium fluorescein), which is embedded in the detector pads. As the sample passes through the pad, any water present in the fuel reacts with the indicator to produce a compound that glows under ultraviolet light. The greater the amount of water in the sample, the brighter the resulting fluorescence.

NOTE

Use of the FWD for F-76 fuel requires modification of the unit operating instructions. The procedures in this paragraph reflect those modifications. If testing JP-5, follows the procedures outlined in NSTM 542, Gasoline and JP-5 Fuel Systems .

541-10.9.2.3.1 To perform the FWD test, the following equipment is required:

Item	NSN
FWD (AEL MK II) Detector Kit (complete)	664-00-999-2786
Major Components:	
Box for Unit	6850-00-999-2786
Ultraviolet Lamp, 6 watt	6240-00-683-0723
Derector Pads (box of 500)	6240-00-999-2785
Ultraviolet Light	5305-00-226-9217
Test Pad Holder	6640-00-999-2784

541-10.9.2.3.2 The following procedure shall be used:

1. Fill the polyethylene bottle provided with the test kit with 200 mL of fuel sample.
2. Obtain a free water detector pad envelope.

CAUTION

To avoid contaminating the detector pad with moisture from the hands, always handle the pad with forceps.

3 Carefully tear open the package, and remove the filter with the forceps provided with the test kit.
4. Check to make sure that the fuel flask is empty and that the drain valve is closed.
5. Vigorously shake the sample bottle for 30 seconds to ensure a homogeneous distribution of contaminant.
6. Insert the ground wire attached to the filter holder and bottle receiver assembly into the jack provided for it adjacent to the drain area.
7. Turn on the vacuum pump, unscrew the bottle cap, and place the bottle receiver and pad holder assembly firmly over the end of the bottle. All the threaded portion of the bottle top should be inserted into the bottle receiver. Then pick up the entire assembly as a unit (pad holder, bottle receiver, and fuel sample bottle). Invert the entire assembly and insert the pad holder end into the fuel flask of the CFD unit (see paragraph 541-10.9.2.4).
8. After the sample has passed through the detector pad, turn off the vacuum pump and remove the bottle and bottle receiver.
9. Using forceps, remove the detector pad and place it (orange side up) in the FWD detector slide depression.
10. Light the ultraviolet bulb by holding both switches in the on position momentarily, and then releasing the start switch. Insert the slide containing the test pad.
11. Look through the view port of the box and compare the intensity of the fluorescence of the test pad with that of the standards to determine the amount of free water. Free water content in ppm is indicated by the numbers located directly above the standard patches.
12. For F-76 fuel, chart readings of 5 ppm or less are acceptable.
13. Drain the fuel from the flask of the CFD unit through the Tygon™ tubing into a suitable container and dispose of in the COST.
14. Secure power to the unit when testing is complete.

541-10.9.2.4 Contaminated Fuel Detector (CFD) Test Procedure. The CFD (formerly called AEL MK III) test kit is used to determine the level of solid contamination in aircraft distillate fuels such as JP-5. Modifications of the operating instructions are required for use with F-76 fuel. The following procedures have been written for F-76 testing. If testing JP-5, follow the procedures found in NSTM Chapter 542, Gasoline and JP-5 Fuel Systems .

541-10.9.2.4.1 To perform this test, the CFD test kit (NSN 6630-00-706-2302) is required. The unit consists of a fuel sample container, a fuel filtration system, and a light transmission system. In the test a volume of fuel is filtered through a Millipore filter paper; any solid particles are retained on the paper. To allow for any light absorption due to the color of the fuel, the filtered sample is passed through a second filter paper, which is used

to indicate fuel coloration. A beam of light is then passed through the papers, and the amount of transmitted light is measured. The higher the level of solid contamination, the lower the level of light transmitted.

541-10.9.2.4.2 To perform the CFD test on F-76 fuel, use the following procedure:

1. Make sure that the fuel flask is empty. If necessary, drain the fuel flask by turning the drain cock handle and allowing the fuel to drain through Tygon™ tubing into a suitable container. Then dispose of the fuel in the COST.
2. Close the drain cock. Disassemble the filter holder and bottle receiver assembly (located in the lid) by turning the center locking ring counterclockwise and pulling the two components apart. Insert the filter holder (the item with a rubber stopper) into the opening in the fuel flask.
3. Turn on the light switch and allow the unit to warm up for 3 to 5 minutes.
4. With no filter in the unit, swing the photocell into the measuring position.
5. Using the rheostat knob, adjust the milliammeter until it reads 0.6.
6. Place two Millipore filters right side up in the filter holder. Reassemble the filter holder and bottle receiver assembly by placing the bottle receiver on top of the filter holder and turning the locking ring in clockwise. Be careful to rotate the ring only; otherwise, the filters may tear.
7. Mark the 32-ounce polyethylene bottle to show a volume of 200 mL. (The F-76 sample is smaller than the 800-mL sample used for testing JP-5). Fill the bottle with 200 mL of F-76 fuel. Prior to doing this, vigorously shake the sample bottle for 30 seconds to ensure a homogeneous distribution of contaminant. Remove the filter holder and bottle receiver assembly from the fuel flask. Place the bottle receiver end over the top of the bottle, and screw the threaded portion of the bottle all the way into the receiver.
8. Insert the ground wire (attached to the filter holder and bottle receiver assembly) into the opening provided for it adjacent to the drain arm. Turn on the pump switch.
9. Pick up the entire assembly as a unit (including the filter holder, bottle receiver, and fuel sample bottle). Invert the assembly and insert the filter holder end into the fuel flask. After all the fuel has drained from the bottle, remove the bottle. After all the fuel has passed through the filters and the bottle receiver has been removed to expose the filters, stop the pump.
10. Drain the fuel from the flask through the Tygon™ tubing into a suitable receptacle. Dispose of the fuel in the COST.
11. Pour a small quantity of clean F-76 from the 16-ounce polyethylene bottle onto the light working surface and, using forceps, lay the test filter in it so that the entire filter becomes wet with fuel.
12. Lift the photocell and, using forceps, place the contaminated filter in the receptacle. Swing the photocell back into measuring position and lay it on top of the filter. Record the reading on the milliammeter. Remove the filter.
13. Repeat steps 11 AND 12 with the second filter using the clean fuel containing only fuel color.
14. Subtract the contaminated filter reading from the clean filter reading.
15. Find the corresponding contamination value in milligrams per liter (mg/L) on the calibration curve. Calibration chart readings of 5 mg/L or less are acceptable and equate to 2.64 mg/L or less.

541-10.9.2.5 Combined Contaminated Fuel Detector (CCFD). The CCFD test kit combines the functions of the FWD and CFD test kits. It can be procured under NSN 6640-01-230-5279.

541-10.9.2.6 Flashpoint Test Procedure. These test procedures are used with various manufacturer's testers, including both Pensky-Martens and NAVIFLASH. They allow for the determination of the fuel flashpoint according to ASTM-93, Standard Test Method for Flashpoint by Pensky-Martens Closed Tester. For both methods, fuel is heated in a closed cup at a specified rate until a flash is detected, either visibly or by sensing pressure build-up, signifying flashpoint. The Pensky-Martens method uses an open flame which is periodically dipped into the test chamber; the NAVIFLASH method uses an electric spark and pressure transducer.

541-10.9.2.6.1 Pensky-Martens Method. The following equipment is required for this test:

Item	NSN
Flashpoint Tester, 115v, 50/60 cycle ac	6630-00-530-0987
Cover, with Operating Mechanism	6630-00-394-7744
Electric Stirrer, 50/60 cycle	6640-00-531-5022
Thermometer, 20-230°F, ASTM 9F	6685-00-242-2183
Dry Cleaning and Degreasing Solvent,Fed-Spec P-D-680, Type II, 5-gal can	6850-00-274-5421

541-10.9.2.6.2 Procedure. The following procedure shall be used for the Pensky-Martens Method:

1. Thoroughly clean and dry all parts of the cup and its accessories before starting the test. If P-D-680 solvent was used to clean the apparatus, be sure that all solvent is removed before adding the sample. If necessary, filter the fuel through filter paper to remove all water before testing.

2. Fill the cup with the sample to the line etched in the side of the cup. Place the lid on the cup and set the cup in the oven. Make sure that the locking device is properly engaged.

3. Insert the thermometer to the proper depth, and light the test flame. Adjust gas flow so that the flame is 5/32 inch (4 mm) in diameter. Apply heat at such a rate that the temperature of the sample rises approximately 10°F (6°C) per minute. The stirrer should be at a rate of 90 to 120 r/min.

4. Apply the test flame when the temperature approaches 30°F (17°C) below the expected flashpoint, and thereafter at every 2°F (1°C).

NOTE

The minimum flashpoint for F-76 and JP-5 fuel is 140° F (60° F)

5. When applying the test flame, stand to the side of the test apparatus (well away from the test flame and shutter mechanism) and quickly lower the flame into the sample chamber. Allow the flame to remain in the chamber for approximately 1 second. The sample stirring mechanism should be disengaged when applying the test flame.

6. Record the flashpoint as the temperature at which a distinctive flash is visible in the test chamber. Do not confuse it with the bluish halo that sometimes surrounds the test flame immediately before the actual flashpoint.

7. Allow the unit to cool. Remove the cover apparatus, pour the sample residue into a suitable waste receptacle for later disposal in the COST, and clean the sample cup with P-D-680 Type II solvent. Allow all solvent to completely evaporate before testing the next sample.

WARNING

To minimize fire hazard, ensure that the unit is secured and unplugged and the gas supply is properly secured upon completion of testing.

541-10.9.2.6.3 NAVIFLASH Method. The following equipment is required for this test:

Item	NSN
NAVIFLASH Test Kit, Complete	0099-LL-H41-1846
Sample Cup	0099-LL-H41-1855
Anti-Vibration Plate, Shock Protecting	0099-LL-H41-1847
Dust Protection Cover, Viny1	0099-LL-H41-1848
Pipette, Metal, 1.0 mL, Red Identifier	0099-LL-H41-1849
Calibration Kit, n-Dodecane, 60-3 mL vials	0099-LL-H41-1854
Swabs, Cotton	6515-00-303-8250

NOTE

Assignment of NSNs is in progress. Refer to responding AEL for open purchase and respective part number.

541-10.9.2.6.4 Procedure. The following procedure shall be used for the NAVIFLASH Method:

1. Depress rear-mounted rocker ON/OFF switch, powering the NAVIFLASH.
2. Use up/down arrow keys to scroll to Shipboard Program Number 1 or 4, for Fuel Acceptance Test or Calibration Programs, respectively. Press TASK key to select.

NOTE

Both calibration and fuel acceptance operations are identical, except n-Dodecane fluid, vice fuel sample, is used for calibration.

3. LCD screen will display FUEL ACCEPTANCE - FLASH/NO FLASH, OVENHEATING WAIT. During this period, the oven is heated to its programmed starting test temperature.
4. Shake sample bottle vigorously to mix contents prior to testing. Use pipette/pipette tip assembly to transfer 1.0 mL of sample fluid to sample cup. Fluid level should rise to scribed line in interior of sample cup.
5. Once LCD screen displays FILL & INSERT CUP IN CHAMBER, insert sample cup into test chamber, securely seating it onto automatic elevator. Close external door. Press RUN key.
6. ″MEASUREMENT IN PROGRESS″ will then be displayed on screen.
7. Upon completion of test, flashpoint temperature, in degrees F, will be displayed on LCD screen, accompanied by GREEN/RED lights.
   a If measured flashpoint is greater than or equal to 140° F, GREEN light will flash and screen will display ACCEPT FUEL message.
   b If less than 140°F, RED light will flash, accompanied with audible alarm, and REJECT FUEL message will be displayed. Press STOP to silence alarm and acknowledge message.

NOTE

Flashpoint measurements shall be performed in duplicate using separate samples. Agreement should be within ± 5° F.

8. Once STOP is pressed, oven is cooled down to the starting temperature automatically.

NOTE

Inspect oven chamber interior. To avoid contamination from previous measurements, gently use cotton swab to remove any residual fluid adhering to a spark plug and thermocouple.

9. Empty sample cup of remaining fuel and thoroughly wipe cup reservoir.

NOTE

When subsequent testing involves changes in fuel types (F-76 and JP-5), run tester with sample cup dry to ensure any residual fluid is removed.

10. Refer to detailed Operating Instructions, supplied with test kit, for specifics regarding error messages.

541-10.9.2.7 API/Specific Gravity Test Procedure. Determining API gravity and specific gravity is important for a number of reasons. Load distribution calculations require a knowledge of fuel gravity, as do a number of engineering calculations such as estimating heating value. The following test procedure, based on ASTM D-287, Standard Test Method for API Gravity of Crude Petroleum Products (Hydrometer Method) , allows quick determination of the API/specific gravity of shipboard fuel samples.

541-10.9.2.7.1 The following equipment is required for the API/specific gravity test:

Item	NSN
API Feul Hydrometer, API 29 to 41	6630-00-244-9984
API Feul Hydrmeter, API 39 to 51	6630-00-244-9985
Lab Glass Cylinder, 375 mm high, 50 mm wide	6640-00-244-4342
Thermometer, -5 to 215°F	6685-00-242-2224
Filter Paper, 90 mm, box of 100	6640-00-866-1645

541-10.9.2.7.2 The test shall be performed according to the following procedure:

1. The fuel temperature shall be approximately the same as that of the surrounding air. Fill the glass cylinder approximately 2/3 full with the sample, and allow any air bubbles to disperse.
2. Gently lower the hydrometer into the sample, and spin, making sure that the hydrometer does not touch the sides of the cylinder.
3. When the hydrometer comes to rest, read the point at which the surface of the liquid meets the scale on the hydrometer.
4. Record the temperature of the fuel. Using the API hydrometer reading obtained in step 3 and the temperature of the fuel, find the API gravity at 60°F (15.6°C) in Table 541-10-4, which has been extracted from ASTM D-1250, Petroleum Measurement Tables , table 5B.
5. The equivalent specific gravity at 60/60°F (15.6/15.6°C) [relative density of fuel at 60° F (15.6°C) to water

at 60°F (15.6°C)] can be found using Table 541-10-5 (extracted from ASTM D-1250, table 3 and table 8). To convert the volume at the observed temperature to the equivalent volume at 60°F (15.6°C), refer to Table 541-10-6 (extracted from ASTM D-1250, table 6B).

541-10.9.2.7.3 Examples of API/Specific Gravity Applications. If you want to determine the volume of fuel in a storage tank at 60°F (15.6°C), use the following procedure:

1. Obtain a fuel sample from the desired storage tank, and determine the fuel temperature.

2. Gauge the tank to determine fuel volume.

3. Use the test procedure outlined in paragraph 541-10.9.2.7 and determine the API gravity. Using the fuel temperature and API reading, refer to Table 541-10-4 to determine the API gravity at 60°F (15.6°C).

4. Using the API gravity at 60°F (15.6°C) and the fuel temperature, refer to Table 541-10-6 to obtain the volume correction factor.

5. Using the tank gauge reading obtained in step 2, determine the volume of fuel in the tank by referring to the fuel volume chart for that tank. Multiply this volume by the volume correction factor obtained in step 4 to determine the fuel tank volume at 60°F (15.6°C).

6. If you want to determine the weight of the fuel volume found in step 5, refer to Table 541-10-5. Using the API gravity obtained in step 3, find the weight per gallon. Multiply the fuel volume at 60°F (15.6°C) determined in step 5 by the weight per gallon obtained from Table 541-10-6. If you want long tons, divide the weight in pounds by 2,240.

Table 541-10-4 OBSERVED API GRAVITY TO API GRAVITY AT 60°F (15.6°C)

Observed Temperature		API Gravity at Observed Temperature																			
		30	31	32	33	34	35	36	37	38	39	40	41	42	43	44	45	46	47	48	49
°C	°F	Corresponding API Gravity at 60°F (15.6°C)																			
–1.1	30	32.1	33.1	34.2	35.2	36.2	37.3	38.3	39.4	40.4	41.5	42.5	43.5	44.6	45.6	46.7	47.7	48.9	50.1	51.3	52.4
–0.6	31	32.0	33.1	34.1	35.1	36.2	37.2	38.2	39.3	40.3	41.4	42.4	43.5	44.5	45.5	46.6	47.6	48.8	49.9	51.1	52.3
0	32	32.0	33.0	34.0	35.1	36.1	37.1	38.2	39.2	40.2	41.3	42.3	43.4	44.4	45.5	46.5	47.5	48.7	49.8	51.0	52.2
0.6	33	31.9	32.9	34.0	35.0	36.0	37.0	38.1	39.1	40.2	41.2	42.2	43.3	44.3	45.4	46.4	47.5	48.5	49.7	50.9	52.0
1.1	34	31.8	32.9	33.9	34.9	35.9	37.0	38.0	39.0	40.1	41.1	42.2	43.2	44.2	45.3	46.3	47.4	48.4	49.6	50.8	51.9
1.7	35	31.8	32.8	33.8	34.8	35.9	36.9	37.9	39.0	40.0	41.0	42.1	43.1	44.1	45.2	46.2	47.3	48.3	49.5	50.6	51.8
2.2	36	31.7	32.7	33.7	34.8	35.8	36.8	37.8	38.9	39.9	41.0	42.0	43.0	44.1	45.1	46.1	47.2	48.2	49.4	50.5	51.7
2.8	37	31.6	32.6	33.7	34.7	35.7	36.7	37.8	38.8	39.8	40.9	41.9	42.9	44.0	45.0	46.0	47.1	48.1	49.3	50.4	51.5
3.3	38	31.5	32.6	33.6	34.6	35.6	36.7	37.7	38.7	39.8	40.8	41.8	42.9	43.8	44.9	46.0	47.0	48.0	49.2	50.3	51.4
3.9	39	31.5	32.5	33.5	34.5	35.6	36.6	37.6	38.6	39.7	40.7	41.7	42.8	43.8	44.8	45.9	46.9	47.9	49.0	50.2	51.3
4.4	40	31.4	32.4	33.4	34.5	35.5	36.5	37.5	38.6	39.6	40.6	41.7	42.7	43.7	44.7	45.8	46.8	47.8	48.9	50.1	51.2
5.0	41	31.3	32.4	33.4	34.4	35.4	36.4	37.5	38.5	39.5	40.5	41.6	42.6	43.6	44.7	45.7	46.7	47.7	48.8	49.9	51.1
5.6	42	31.3	32.3	33.3	34.3	35.3	36.4	37.4	38.4	39.4	40.5	41.5	42.6	43.5	44.6	45.6	46.6	47.6	48.7	49.8	50.9
6.1	43	31.2	32.2	33.2	34.2	35.3	36.3	37.3	38.3	39.4	40.4	41.4	42.4	43.4	44.5	45.5	46.5	47.6	48.6	49.7	50.8
6.7	44	31.1	32.1	33.2	34.2	35.2	36.2	37.2	38.2	39.3	40.3	41.3	42.3	43.4	44.4	45.4	46.4	47.5	48.5	49.6	50.7
7.2	45	31.1	32.1	33.1	34.1	35.1	36.1	37.1	38.2	39.2	40.2	41.2	42.3	43.3	44.3	45.3	46.3	47.4	48.4	49.5	50.6
7.8	46	31.0	32.0	33.0	34.0	35.0	36.1	37.1	38.1	39.1	40.1	41.1	42.2	43.2	44.2	45.2	46.3	47.3	48.3	49.4	50.5
8.3	47	30.9	31.9	32.9	34.0	35.0	36.0	37.0	38.0	39.0	40.0	41.1	42.1	43.1	44.1	45.1	46.2	47.2	48.2	49.3	50.4
8.9	48	30.8	31.9	32.9	33.9	34.9	35.9	36.9	37.9	38.9	40.0	41.0	42.0	43.0	44.0	45.1	46.1	47.1	48.1	49.2	50.3
9.4	49	30.8	31.8	32.8	33.8	34.8	35.8	36.8	37.9	38.9	39.9	40.9	41.9	42.9	44.0	45.0	46.0	47.0	48.0	49.1	50.1
10.0	50	30.7	31.7	32.7	33.7	34.7	35.8	36.8	37.8	38.8	39.8	40.8	41.8	42.8	43.9	44.9	45.9	46.9	47.9	49.0	50.0
10.6	51	30.6	31.6	32.6	33.7	34.7	35.7	36.7	37.7	38.7	39.7	40.7	41.8	42.8	43.8	44.8	45.8	46.8	47.8	48.9	49.9
11.1	52	30.6	31.6	32.6	33.6	34.6	35.6	36.6	37.6	38.6	39.6	40.7	41.7	42.7	43.7	44.7	45.7	46.7	47.7	48.8	49.8
11.7	53	30.5	31.5	32.5	33.5	34.5	35.5	36.5	37.5	38.6	39.6	40.6	41.6	42.6	43.6	44.6	45.6	46.6	47.6	48.7	49.7
12.2	54	30.4	31.4	32.4	33.4	34.4	35.5	36.5	37.5	38.5	39.5	40.5	41.5	42.5	43.5	44.5	45.5	46.5	47.6	48.6	49.6
12.8	55	30.3	31.4	32.4	33.4	34.4	35.4	36.4	37.4	38.4	39.4	40.4	41.4	42.4	43.4	44.4	45.4	46.5	47.5	48.5	49.5
13.3	56	30.3	31.3	32.3	33.3	34.3	35.3	36.3	37.3	38.3	39.3	40.3	41.3	42.3	43.3	44.3	45.4	46.4	47.4	48.4	49.4
13.9	57	30.2	31.2	32.2	33.2	34.2	35.2	36.2	37.2	38.2	39.2	40.2	41.2	42.3	43.3	44.3	45.3	46.3	47.3	48.3	49.3
14.4	58	30.1	31.1	32.1	33.1	34.1	35.1	36.2	37.2	38.2	39.2	40.2	41.2	42.2	43.2	44.2	45.2	46.2	47.2	48.2	49.2
15.0	59	30.1	31.1	32.1	33.1	34.1	35.1	36.1	37.1	38.1	39.1	40.1	41.1	42.1	43.1	44.1	45.1	46.1	47.1	48.1	49.1

Observed Temperature		API Gravity at Observed Temperature																			
		30	31	32	33	34	35	36	37	38	39	40	41	42	43	44	45	46	47	48	49
°C	°F	Corresponding API Gravity at 60°F (15.6°C)																			
15.6	60	30.0	31.0	32.0	33.0	34.0	35.0	36.0	37.0	38.0	39.0	40.0	41.0	42.0	43.0	44.0	45.0	46.0	47.0	48.0	49.0
16.1	61	29.9	30.9	31.9	32.9	33.9	34.9	35.9	36.9	37.9	38.9	39.9	40.9	41.9	42.9	43.9	44.9	45.9	46.9	47.9	48.9
16.7	62	29.9	30.9	31.9	32.9	33.9	34.8	35.8	36.8	37.8	38.8	39.8	40.8	41.8	42.8	43.8	44.8	45.8	46.8	47.8	48.8
17.2	63	29.8	30.8	31.8	32.8	33.8	34.8	35.8	36.8	37.8	38.8	39.8	40.8	41.7	42.7	43.7	44.7	45.7	46.7	47.7	48.7
17.8	64	29.7	30.7	31.7	32.7	33.7	34.7	35.7	36.7	37.7	38.7	39.7	40.7	41.7	42.7	43.7	44.6	45.6	46.6	47.6	48.6
18.3	65	29.7	30.6	31.6	32.6	33.6	34.6	35.6	36.6	37.6	38.6	39.6	40.6	41.6	42.6	43.6	44.6	45.5	46.5	47.5	48.5
18.9	66	29.6	30.6	31.6	32.6	33.6	34.6	35.5	36.5	37.5	38.5	39.5	40.5	41.5	42.5	43.5	44.5	45.5	46.5	47.4	48.4
19.4	67	29.5	30.5	31.5	32.5	33.5	34.5	35.5	36.5	37.5	38.4	39.4	40.4	41.4	42.4	43.4	44.4	45.4	46.4	47.4	48.3
20.0	68	29.4	30.4	31.4	32.4	33.4	34.4	35.4	36.4	37.4	38.4	39.4	40.3	41.3	42.3	43.3	44.3	45.3	46.3	47.3	48.2
20.6	69	29.4	30.4	31.4	32.3	33.3	34.3	35.3	36.3	37.3	38.3	39.3	40.3	41.2	42.2	43.2	44.2	45.2	46.2	47.2	48.1
21.1	70	29.3	30.3	31.3	32.3	33.3	34.3	35.2	36.2	37.2	38.2	39.2	40.2	41.2	42.2	43.1	44.1	45.1	46.1	47.1	48.1
21.7	71	29.2	30.2	31.2	32.2	33.2	34.2	35.2	36.2	37.1	38.1	39.1	40.1	41.1	42.1	43.1	44.0	45.0	46.0	47.0	48.0
22.2	72	29.2	30.2	31.1	32.1	33.1	34.1	35.1	36.1	37.1	38.1	39.0	40.0	41.0	42.0	43.0	43.9	44.9	45.9	46.9	47.9
22.8	73	29.1	30.1	31.1	32.1	33.0	34.0	35.0	36.0	37.0	38.0	39.0	39.9	40.9	41.9	42.9	43.9	44.8	45.8	46.8	47.8
23.3	74	29.0	30.0	31.0	32.0	33.0	34.0	34.9	35.9	36.9	37.9	38.9	39.9	40.8	41.8	42.8	43.8	44.8	45.7	46.7	47.7
23.9	75	29.0	29.9	30.9	31.9	32.9	33.9	34.9	35.9	36.8	37.8	38.8	39.8	40.8	41.7	42.7	43.7	44.7	45.6	46.6	47.6
24.4	76	28.9	29.9	30.9	31.8	32.8	33.8	34.8	35.8	36.8	37.7	38.7	39.7	40.7	41.6	42.6	43.6	44.6	45.6	46.5	47.5
25.0	77	28.8	29.8	30.8	31.8	32.8	33.7	34.7	35.7	36.7	37.7	38.6	39.6	40.6	41.6	42.5	43.5	44.5	45.5	46.4	47.4
25.6	78	28.8	29.7	30.7	31.7	32.7	33.7	34.6	35.6	36.6	37.6	38.6	39.5	40.5	41.5	42.5	43.4	44.4	45.4	46.3	47.3
26.1	79	28.7	29.7	30.6	31.6	32.6	33.6	34.6	35.6	36.5	37.5	38.5	39.5	40.4	41.4	42.4	43.3	44.3	45.3	46.3	47.2
26.7	80	28.6	29.6	30.6	31.6	32.5	33.5	34.5	35.5	36.5	37.4	38.4	39.4	40.3	41.3	42.3	43.3	44.2	45.2	46.2	47.1
27.2	81	28.6	29.5	30.5	31.5	32.5	33.4	34.4	35.4	36.4	37.4	38.3	39.3	40.3	41.2	42.2	43.2	44.1	45.1	46.1	47.0
27.8	82	28.5	29.5	30.4	31.4	32.4	33.4	34.3	35.3	36.3	37.3	38.2	39.2	40.2	41.2	42.1	43.1	44.1	45.0	46.0	47.0
28.3	83	28.4	29.4	30.4	31.3	32.3	33.3	34.3	35.2	36.2	37.2	38.2	39.1	40.1	41.1	42.0	43.0	44.0	44.9	45.9	46.9
28.9	84	28.3	29.3	30.3	31.3	32.2	33.2	34.2	35.2	36.1	37.1	38.1	39.1	40.0	41.0	42.0	42.9	43.9	44.8	45.8	46.8
29.4	85	28.3	29.3	30.2	31.2	32.2	33.1	34.1	35.1	36.1	37.0	38.0	39.0	39.9	40.9	41.9	42.8	43.8	44.8	45.7	46.7
30.0	86	28.2	29.2	30.2	31.1	32.1	33.1	34.1	35.0	36.0	37.0	37.9	38.9	39.9	40.8	41.8	42.7	43.7	44.7	45.6	46.6
30.6	87	28.1	29.1	30.1	31.1	32.0	33.0	34.0	34.9	35.9	36.9	37.9	38.8	39.8	40.7	41.7	42.7	43.6	44.6	45.5	46.5
31.1	88	28.1	29.0	30.0	31.0	32.0	32.9	33.9	34.9	35.8	36.8	37.8	38.7	39.7	40.7	41.6	42.6	43.5	44.5	45.5	46.4
31.7	89	28.0	29.0	29.9	30.9	31.9	32.9	33.8	34.8	35.8	36.7	37.7	38.7	39.6	40.6	41.5	42.5	43.4	44.4	45.4	46.3

Observed Temperature		API Gravity at Observed Temperature																			
		30	31	32	33	34	35	36	37	38	39	40	41	42	43	44	45	46	47	48	49
°C	°F	Corresponding API Gravity at 60°F (15.6°C)																			
32.2	90	27.9	28.9	29.9	30.8	31.8	32.8	33.8	34.7	35.7	36.7	37.6	38.6	39.5	40.5	41.5	42.4	43.4	44.3	45.3	46.2
32.8	91	27.9	28.8	29.8	30.8	31.7	32.7	33.7	34.6	35.6	36.6	37.5	38.5	39.5	40.4	41.4	42.3	43.3	44.2	45.2	46.1
33.3	92	27.8	28.8	29.7	30.7	31.7	32.6	33.6	34.6	35.5	36.5	37.5	38.4	39.4	40.3	41.3	42.2	43.2	44.1	45.1	46.1
33.9	93	27.7	28.7	29.7	30.6	31.6	32.6	33.5	34.5	35.5	36.4	37.4	38.3	39.3	40.3	41.2	42.2	43.1	44.1	45.0	46.0
34.4	94	27.7	28.6	29.6	30.6	31.5	32.5	33.5	34.4	35.4	36.4	37.3	38.3	39.2	40.2	41.1	42.1	43.0	44.0	44.9	45.9
35.0	95	27.6	28.6	29.5	30.5	31.5	32.4	33.4	34.4	35.3	36.3	37.2	38.2	39.1	40.1	41.0	42.0	42.9	43.9	44.8	45.8
35.6	96	27.5	28.5	29.5	30.4	31.4	32.4	33.3	34.3	35.2	36.2	37.2	38.1	39.1	40.0	41.0	41.9	42.9	43.8	44.7	45.7
36.1	97	27.5	28.4	29.4	30.4	31.3	32.3	33.2	34.2	35.2	36.1	37.1	38.0	39.0	39.9	40.9	41.8	42.8	43.7	44.7	45.6
36.7	98	27.4	28.4	29.3	30.3	31.2	32.2	33.2	34.1	35.1	36.0	37.0	38.0	38.9	39.8	40.8	41.7	42.7	43.6	44.6	45.5
37.2	99	27.3	28.3	29.3	30.2	31.2	32.1	33.1	34.1	35.0	36.0	36.9	37.9	38.8	39.8	40.7	41.7	42.6	43.5	44.5	45.4
37.8	100	27.3	28.2	29.2	30.1	31.1	32.1	33.0	34.0	34.9	35.9	36.9	37.8	38.7	39.7	40.6	41.6	42.5	43.5	44.4	45.3
38.3	101	27.2	28.2	29.1	30.1	31.0	32.0	32.9	33.9	34.9	35.8	36.8	37.7	38.7	39.6	40.6	41.5	42.4	43.4	44.3	45.2
38.9	102	27.1	28.1	29.0	30.0	31.0	31.9	32.9	33.8	34.8	35.7	36.7	37.6	38.6	39.5	40.5	41.4	42.3	43.3	44.2	45.2
39.4	103	27.1	28.0	29.0	29.9	30.9	31.8	32.8	33.8	34.7	35.7	36.6	37.6	38.5	39.4	40.4	41.3	42.3	43.2	44.1	45.1
40.0	104	27.0	28.0	28.9	29.9	30.8	31.8	32.7	33.7	34.6	35.6	36.5	37.5	38.4	39.4	40.3	41.2	42.2	43.1	44.1	45.0
40.6	105	26.9	27.9	28.8	29.8	30.7	31.7	32.7	33.6	34.6	35.5	36.5	37.4	38.4	39.3	40.2	41.2	42.1	43.0	44.0	44.9
41.1	106	26.9	27.8	28.8	29.7	30.7	31.6	32.6	33.5	34.5	35.4	36.4	37.3	38.3	39.2	40.1	41.1	42.0	42.9	43.9	44.8
41.7	107	26.8	27.7	28.7	29.7	30.6	31.6	32.5	33.5	34.4	35.4	36.3	37.3	38.2	39.1	40.1	41.0	41.9	42.9	43.8	44.7
42.2	108	26.7	27.7	28.6	29.6	30.5	31.5	32.4	33.4	34.3	35.3	36.2	37.2	38.1	39.1	40.0	40.9	41.8	42.8	43.7	44.6
42.8	109	26.7	27.6	28.6	29.5	30.5	31.4	32.4	33.3	34.3	35.2	36.2	37.1	38.0	39.0	39.9	40.8	41.8	42.7	43.6	44.5
43.3	110	26.6	27.5	28.5	29.4	30.4	31.3	32.3	33.2	34.2	35.1	36.1	37.0	38.0	38.9	39.8	40.8	41.7	42.6	43.5	44.5
43.9	111	26.5	27.5	28.4	29.4	30.3	31.3	32.2	33.2	34.1	35.1	36.0	37.0	37.9	38.8	39.7	40.7	41.6	42.5	43.5	44.4
44.4	112	26.5	27.4	28.4	29.3	30.3	31.2	32.1	33.1	34.0	35.0	35.9	36.9	37.8	38.7	39.7	40.6	41.5	42.4	43.4	44.3
45.0	113	26.4	27.3	28.3	29.2	30.2	31.1	32.1	33.0	34.0	34.9	35.9	36.8	37.7	38.7	39.6	40.5	41.4	42.4	43.3	44.2
45.6	114	26.3	27.3	28.2	29.2	30.1	31.1	32.0	32.9	33.9	34.8	35.8	36.7	37.7	38.6	39.5	40.4	41.4	42.3	43.2	44.1
46.1	115	26.3	27.2	28.2	29.1	30.0	31.0	31.9	32.9	33.8	34.8	35.7	36.6	37.6	38.5	39.4	40.3	41.3	42.2	43.1	44.0
46.7	116	26.2	27.1	28.1	29.0	30.0	30.9	31.9	32.8	33.7	34.7	35.6	36.6	37.5	38.4	39.3	40.3	41.2	42.1	43.0	43.9
47.2	117	26.1	27.1	28.0	29.0	29.9	30.8	31.8	32.7	33.7	34.6	35.6	36.5	37.4	38.3	39.3	40.2	41.1	42.0	42.9	43.9
47.8	118	26.1	27.0	27.9	28.8	29.8	30.8	31.7	32.7	33.6	34.5	35.5	36.4	37.3	38.3	39.2	40.1	41.0	41.9	42.9	43.8
48.3	119	26.0	26.0	27.9	28.8	29.8	30.7	31.6	32.6	33.5	34.5	35.4	36.3	37.3	38.2	39.1	40.0	40.9	41.9	42.8	43.7

Table 541-10-5 API GRAVITY TO SPECIFIC GRAVITY

API Gravityat 60°F (15.6°C)	Specific Gravityat60°/60°F (15.6°/15.6°C)	PoundsperGallonat 60°F (15.6°C)	GallonsperPoundat 60°F (15.6°C)
26.5	0.8956	7.457	0.1341
26.6	0.8950	7.453	0.1342
26.7	0.8944	7.448	0.1343
26.8	0.8939	7.443	0.1344
26.9	0.8933	7.439	0.1344
27.0	0.8927	7.434	0.1345
27.1	0.8922	7.429	0.1346
27.2	0.8916	7.425	0.1347
27.3	0.8911	7.420	0.1348
27.4	0.8905	7.415	0.1349
27.5	0.8899	7.411	0.1350
27.6	0.8894	7.406	0.1350
27.7	0.8888	7.401	0.1351
27.8	0.8883	7.397	0.1352
27.9	0.8877	7.392	0.1353
28.0	0.8871	7.387	0.1354
28.1	0.8866	7.383	0.1354
28.2	0.8860	7.378	0.1355
28.3	0.8855	7.373	0.1356
28.4	0.8849	7.369	0.1357
28.5	0.8844	7.364	0.1358
28.6	0.8838	7.360	0.1359
28.7	0.8833	7.355	0.1360
28.8	0.8827	7.350	0.1360
28.9	0.8822	7.346	0.1361
29.0	0.8816	7.341	0.1362
29.1	0.8811	7.337	0.1363
29.2	0.8805	7.332	0.1364
29.3	0.8800	7.327	0.1365
29.4	0.8794	7.323	0.1366
29.5	0.8789	7.318	0.1366
29.6	0.8783	7.314	0.1367
29.7	0.8778	7.309	0.1368
29.8	0.8772	7.305	0.1369
29.9	0.8767	7.300	0.1370
30.0	0.8762	7.296	0.1371
30.1	0.8756	7.291	0.1372
30.2	0.8751	7.287	0.1372
30.3	0.8745	7.282	0.1373
30.4	0.8740	7.278	0.1374
30.5	0.8735	7.273	0.1375
30.6	0.8729	7.269	0.1376
30.7	0.8724	7.264	0.1377
30.8	0.8718	7.260	0.1378
30.9	0.8713	7.255	0.1378

Table 541-10-5 API GRAVITY TO SPECIFIC GRAVITY - Continued

API Gravityat 60°F (15.6°C)	Specific Gravityat60°/60°F (15.6°/15.6°C)	PoundsperGallonat 60°F (15.6°C)	GallonsperPoundat 60°F (15.6°C)
31.0	0.8706	7.251	0.1379
31.1	0.8702	7.246	0.1380
31.2	0.8697	7.242	0.1381
31.3	0.8692	7.237	0.1382
31.4	0.8686	7.233	0.1383
31.5	0.8681	7.228	0.1384
31.6	0.8676	7.224	0.1384
31.7	0.8670	7.220	0.1385
31.8	0.8665	7.215	0.1386
31.9	0.8660	7.211	0.1387
32.0	0.8654	7.206	0.1388
32.1	0.8649	7.202	0.1389
32.2	0.8644	7.197	0.1389
32.3	0.8639	7.193	0.1390
32.4	0.8633	7.189	0.1391
32.5	0.8628	7.184	0.1392
32.6	0.8623	7.180	0.1393
32.7	0.8618	7.176	0.1394
32.8	0.8612	7.171	0.1395
32.9	0.8607	7.167	0.1395
33.0	0.8602	7.162	0.1396
33.1	0.8597	7.158	0.1397
33.2	0.8591	7.154	0.1398
33.3	0.8586	7.149	0.1399
33.4	0.8581	7.145	0.1400
33.5	0.8576	7.141	0.1400
33.6	0.8571	7.136	0.1401
33.7	0.8565	7.132	0.1402
33.8	0.8560	7.128	0.1403
33.9	0.8555	7.123	0.1404
34.0	0.8550	7.119	0.1405
34.1	0.8545	7.115	0.1405
34.2	0.8540	7.110	0.1406
34.3	0.8534	7.106	0.1407
34.4	0.8529	7.102	0.1408
34.5	0.8524	7.098	0.1409
34.6	0.8519	7.093	0.1410
34.7	0.8514	7.089	0.1411
34.8	0.8509	7.085	0.1411
34.9	0.8504	7.081	0.1412
35.0	0.8498	7.076	0.1413
35.1	0.8493	7.072	0.1414
35.2	0.8488	7.068	0.1415
35.3	0.8483	7.064	0.1416
35.4	0.8478	7.059	0.1417

Table 541-10-5 API GRAVITY TO SPECIFIC GRAVITY - Continued

API Gravityat 60°F (15.6°C)	Specific Gravityat60°/60°F (15.6°/15.6°C)	PoundsperGallonat 60°F (15.6°C)	GallonsperPoundat 60°F (15.6°C)
35.5	0.8473	7.055	0.1417
35.6	0.8468	7.051	0.1418
35.7	0.8463	7.047	0.1419
35.8	0.8458	7.042	0.1420
35.9	0.8453	7.038	0.1421
36.0	0.8448	7.034	0.1422
36.1	0.8443	7.030	0.1422
36.2	0.8438	7.028	0.1423
36.3	0.8433	7.021	0.1424
36.4	0.8428	7.017	0.1425
36.5	0.8423	7.013	0.1426
36.6	0.8418	7.009	0.1427
36.7	0.8413	7.005	0.1428
36.8	0.8408	7.000	0.1428
36.9	0.8403	6.996	0.1429
37.0	0.8398	6.992	0.1430
37.1	0.8393	6.988	0.1431
37.2	0.8388	6.984	0.1432
37.3	0.8383	6.980	0.1433
37.4	0.8378	.976	0.1433
37.5	0.8373	6.971	0.1434
37.6	0.8368	6.967	0.1435
37.7	0.8363	6.963	0.1436
37.8	0.8358	6.959	0.1437
37.9	0.8353	6.955	0.1438
38.0	0.8348	6.951	0.1439
38.1	0.8343	6.947	0.1439
38.2	0.8338	6.943	0.1440
38.3	0.8333	6.939	0.1441
38.4	0.8328	6.934	0.1442
38.5	0.8324	6.930	0.1443
38.6	0.8319	6.926	0.1444
38.7	0.8314	6.922	0.1445
38.8	0.8309	6.918	0.1446
38.9	0.8304	6.914	0.1446
39.0	0.8299	6.910	0.1447
39.1	0.8294	6.906	0.1448
39.2	0.8289	6.902	0.1449
39.3	0.8285	6.898	0.1450
39.4	0.8280	6.894	0.1451
39.5	0.8275	6.890	0.1451
39.6	0.8270	6.886	0.1452
39.7	0.8265	6.882	0.1453
39.8	0.8260	6.878	0.1454
39.9	0.8256	6.874	0.1455

Table 541-10-5 API GRAVITY TO SPECIFIC GRAVITY - Continued

API Gravityat 60°F (15.6°C)	Specific Gravityat60°/60°F (15.6°/15.6°C)	PoundsperGallonat 60°F (15.6°C)	GallonsperPoundat 60°F (15.6°C)
40.0	0.8251	6.870	0.1456
40.1	0.8246	6.866	0.1456
40.2	0.8241	6.862	0.1457
40.3	0.8236	6.858	0.1458
40.4	0.8232	6.854	0.1459
40.5	0.8227	6.850	0.1460
40.6	0.8222	6.846	0.1461
40.7	0.8217	6.842	0.1462
40.8	0.8212	6.838	0.1462
40.9	0.8208	6.834	0.1463
41.0	0.8203	6.830	0.1464
41.1	0.8198	6.826	0.1465
41.2	0.8193	6.822	0.1466
41.3	0.8189	6.818	0.1467
41.4	0.8184	6.814	0.1468
41.5	0.8179	6.810	0.1468
41.6	0.8174	6.806	0.1469
41.7	0.8170	6.802	0.1470
41.8	0.8165	6.798	0.1471
41.9	0.8160	6.794	0.1472
42.0	0.8155	6.790	0.1473
42.1	0.8151	6.786	0.1474
42.2	0.8146	6.783	0.1474
42.3	0.8142	6.779	0.1475
42.4	0.8137	6.775	0.1476
42.5	0.8132	6.771	0.1477
42.6	0.8128	6.767	0.1478
42.7	0.8123	6.763	0.1479
42.8	0.8118	6.759	0.1480
42.9	0.8114	6.755	0.1480
43.0	0.8109	6.751	0.1481
43.1	0.8104	6.748	0.1482
43.2	0.8100	6.744	0.1483
43.3	0.8095	6.740	0.1484
43.4	0.8090	6.736	0.1485
43.5	0.8086	6.732	0.1485
43.6	0.8081	6.728	0.1486
43.7	0.8076	6.724	0.1487
43.8	0.8072	6.721	0.1488
43.9	0.8067	6.717	0.1489
44.0	0.8063	6.713	0.1490
44.1	0.8058	6.709	0.1491
44.2	0.8054	6.705	0.1491
44.3	0.8049	6.701	0.1492
44.4	0.8044	6.698	0.1493

Table 541-10-5 API GRAVITY TO SPECIFIC GRAVITY - Continued

API Gravityat 60°F (15.6°C)	Specific Gravityat60°/60°F (15.6°/15.6°C)	PoundsperGallonat 60°F (15.6°C)	GallonsperPoundat 60°F (15.6°C)
44.5	0.8040	6.694	0.1494
44.6	0.8035	6.690	0.1495
44.7	0.8031	6.686	0.1496
44.8	0.8026	6.682	0.1497
44.9	0.8022	6.679	0.1497
45.0	0.8017	6.675	0.1498
45.1	0.8012	6.671	0.1499
45.2	0.8008	6.667	0.1500
45.3	0.8003	6.663	0.1501
45.4	0.7999	6.660	0.1502
45.5	0.7994	6.656	0.1502
45.6	0.7990	6.652	0.1503
45.7	0.7985	6.648	0.1504
45.8	0.7981	6.645	0.1505
45.9	0.7976	6.641	0.1506
46.0	0.7972	6.637	0.1507
46.1	0.7967	6.633	0.1508
46.2	0.7963	6.630	0.1508
46.3	0.7958	6.626	0.1509
46.4	0.7954	6.622	0.1510
46.5	0.7949	6.618	0.1511
46.6	0.7945	6.615	0.1512
46.7	0.7941	6.611	0.1513
46.8	0.7936	6.607	0.1514
46.9	0.7932	6.604	0.1514
47.0	0.7927	6.600	0.1515
47.1	0.7923	6.596	0.1516
47.2	0.7918	6.592	0.1517
47.3	0.7914	6.589	0.1518
47.4	0.7909	6.585	0.1519
47.5	0.7905	6.581	0.1519
47.6	0.7901	6.578	0.1520
47.7	0.7896	6.574	0.1521
47.8	0.7892	6.570	0.1522
47.9	0.7887	6.567	0.1523
48.0	0.7883	6.563	0.1524
48.1	0.7879	6.559	0.1525
48.2	0.7874	6.556	0.1525
48.3	0.7870	6.552	0.1526
48.4	0.7865	6.548	0.1527
48.5	0.7861	6.545	0.1528
48.6	0.7857	6.541	0.1529
48.7	0.7852	6.538	0.1530
48.8	0.7848	6.534	0.1531
48.9	0.7844	6.530	0.1531

Table 541-10-6 VOLUME CORRECTION TO 60°F (15.6°C)

Observed Temperature		API Gravity at 60°F (15.6°C)									
		30	31	32	33	34	35	36	37	38	39
°C	°F	Factor for Correcting Indicated Volume to Volume at 60°F (15.6°C)									
-1.1	30	1.0133	1.0134	1.0135	1.0136	1.0137	1.0138	1.0139	1.0140	1.0142	1.0144
-0.6	31	1.0128	1.0129	1.0130	1.0131	1.0132	1.0133	1.0135	1.0136	1.0137	1.0139
0.0	32	1.0124	1.0125	1.0126	1.0127	1.0128	1.9129	1.0130	1.0131	1.0132	1.0134
0.6	33	1.0119	1.0120	1.0121	1.0122	1.0123	1.0124	1.0125	1.0126	1.0128	1.0129
1.1	34	1.0115	1.0116	1.0117	1.0118	1.0119	1.0120	1.0121	1.0122	1.0123	1.0124
1.7	35	1.0111	1.0112	1.0112	1.0113	1.0114	1.0115	1.0116	1.0117	1.0118	1.0120
2.2	36	1.0106	1.0107	1.0108	1.0109	1.0110	1.0111	1.0111	1.0112	1.0114	1.0115
2.8	37	1.0102	1.0103	1.0103	1.0104	1.0105	1.0106	1.0107	1.0108	1.0109	1.0110
3.3	38	1.0097	1.0098	1.0099	1.0100	1.0101	1.0101	1.0102	1.0103	1.0104	1.0105
3.9	39	1.0093	1.0094	1.0095	1.0095	1.0096	1.0097	1.0098	1.0098	1.0099	1.0101
4.4	40	1.0089	1.0089	1.0090	1.0091	1.0091	1.0092	1.0093	1.0094	1.0095	1.0096
5.0	41	1.0084	1.0085	1.0086	1.0086	1.0087	1.0088	1.0088	1.0089	1.0090	1.0091
5.6	42	1.0080	1.0080	1.0081	1.0082	1.0082	1.0083	1.0084	1.0084	1.0085	1.0086
6.1	43	1.0075	1.0076	1.0077	1.0077	1.0078	1.0078	1.0079	1.0080	1.0081	1.0081
6.7	44	1.0071	1.0071	1.0072	1.0073	1.0073	1.0074	1.0074	1.0075	1.0076	1.0077
7.2	45	1.0066	1.0067	1.0068	1.0068	1.0069	1.0069	1.0070	1.0070	1.0071	1.0072
7.8	46	1.0062	1.0063	1.0063	1.0064	1.0064	1.0065	1.0065	1.0066	1.0066	1.0067
8.3	47	1.0058	1.0058	1.0059	1.0059	1.0060	1.0060	1.0060	1.0061	1.0062	1.0062
8.9	48	1.0053	1.0054	1.0054	1.0055	1.0055	1.0055	1.0056	1.0056	1.0057	1.0058
9.4	49	1.0049	1.0049	1.0050	1.0050	1.0050	1.0051	1.0051	1.0052	1.0052	1.0053
10.0	50	1.0044	1.0045	1.0045	1.0045	1.0046	1.0046	1.0047	1.0047	1.0047	1.0048
10.6	51	1.0040	1.0040	1.0041	1.0041	1.0041	1.0042	1.0042	1.0042	1.0043	1.0043
11.1	52	1.0035	1.0036	1.0036	1.0036	1.0037	1.0037	1.0037	1.0038	1.0038	1.0038
11.7	53	1.0031	1.0031	1.0032	1.0032	1.0032	1.0032	1.0033	1.0033	1.0033	1.0034
12.2	54	1.0027	1.0027	1.0027	1.0027	1.0027	1.0028	1.0028	1.0028	1.0028	1.0029
12.8	55	1.0022	1.0022	1.0023	1.0023	1.0023	1.0023	1.0023	1.0023	1.0024	1.0024
13.3	56	1.0018	1.0018	1.0018	1.0018	1.0018	1.0018	1.0019	1.0019	1.0019	1.0019
13.9	57	1.0013	1.0013	1.0014	1.0014	1.0014	1.0014	1.0014	1.0014	1.0014	1.0014
14.4	58	1.0009	1.0009	1.0009	1.0009	1.0009	1.0009	1.0009	1.0009	1.0009	1.0010
15.0	59	1.0004	1.0004	1.0005	1.0005	1.0005	1.0005	1.0005	1.0005	1.0005	1.0005
15.6	60	1.0000	1.0000	1.0000	1.0000	1.0000	1.0000	1.0000	1.0000	1.0000	1.0000
16.1	61	0.9996	0.9996	0.9995	0.9995	0.9995	0.9995	0.9995	0.9995	0.9995	0.9995
16.7	62	0.9991	0.9991	0.9991	0.9991	0.9991	0.9991	0.9991	0.9991	0.9990	0.9990
17.2	63	0.9987	0.9987	0.9986	0.9986	0.9986	0.9986	0.9986	0.9986	0.9986	0.9986
17.8	64	0.9982	0.9982	0.9982	0.9982	0.9982	0.9982	0.9981	0.9981	0.9981	0.9981
18.3	65	0.9978	0.9978	0.9977	0.9977	0.9977	0.9977	0.9977	0.9977	0.9976	0.9976
18.9	66	0.9973	0.9973	0.9973	0.9973	0.9972	0.9972	0.9972	0.9972	0.9971	0.9971
19.4	67	0.9969	0.9969	0.9968	0.9968	0.9968	0.9968	0.9967	0.9967	0.9967	0.9966
20.0	68	0.9964	0.9964	0.9964	0.9964	0.9963	0.9963	0.9963	0.9962	0.9962	0.9962
20.6	69	0.9960	0.9960	0.9959	0.9959	0.9959	0.9958	0.9958	0.9958	0.9957	0.9957
21.1	70	0.9956	0.9955	0.9955	0.9954	0.9954	0.9954	0.9953	0.9953	0.9952	0.9952
21.7	71	0.9951	0.9951	0.9950	0.9950	0.9949	0.9949	0.9948	0.9948	0.9948	0.9947
22.2	72	0.9947	0.9946	0.9946	0.9945	0.9945	0.9944	0.9944	0.9944	0.9943	0.9942
22.8	73	0.9942	0.9942	0.9941	0.9941	0.9940	0.9940	0.9939	0.9939	0.9938	0.9937
23.3	74	0.9938	0.9937	0.9937	0.9936	0.9936	0.9935	0.9935	0.9934	0.9933	0.9933

Table 541-10-6 VOLUME CORRECTION TO 60°F (15.6°C) - Continued

Observed Temperature		API Gravity at 60°F (15.6°C)									
		30	**31**	**32**	**33**	**34**	**35**	**36**	**37**	**38**	**39**
°C	**°F**	**Factor for Correcting Indicated Volume to Volume at 60°F (15.6°C)**									
23.9	75	0.9933	0.9933	0.9932	0.9932	0.9931	0.9931	0.9930	0.9929	0.9929	0.9928
24.4	76	0.9929	0.9928	0.9928	0.9927	0.9926	0.9926	0.9925	0.9925	0.9924	0.9923
25.0	77	0.9924	0.9924	0.9923	0.9922	0.9922	0.9921	0.9921	0.9920	0.9919	0.9918
25.6	78	0.9920	0.9919	0.9919	0.9918	0.9917	0.9917	0.9916	0.9915	0.9914	0.9913
26.1	79	0.9915	0.9915	0.9914	0.9913	0.9913	0.9912	0.9911	0.9911	0.9910	0.9908
26.7	80	0.9911	0.9910	0.9909	0.9909	0.9908	0.9907	0.9907	0.9906	0.9905	0.9904
27.2	81	0.9906	0.9906	0.9905	0.9904	0.9903	0.9903	0.9902	0.9901	0.9900	0.9899
27.8	82	0.9902	0.9901	0.9900	0.9900	0.9899	0.9898	0.9897	0.9896	0.9895	0.9894
28.3	83	0.9898	0.9897	0.9896	0.9895	0.9894	0.9893	0.9893	0.9892	0.9890	0.9889
28.9	84	0.9893	0.9892	0.9891	0.9890	0.9890	0.9889	0.9888	0.9887	0.9886	0.9884
29.4	85	0.9889	0.9888	0.9887	0.9886	0.9885	0.9884	0.9883	0.9882	0.9881	0.9879
30.0	86	0.9884	0.9883	0.9882	0.9881	0.9880	0.9879	0.9878	0.9877	0.9876	0.9875
30.6	87	0.9880	0.9879	0.9878	0.9877	0.9876	0.9875	0.9874	0.9873	0.9871	0.9870
31.1	88	0.9875	0.9874	0.9873	0.9872	0.9871	0.9870	0.9869	0.9868	0.9867	0.9865
31.7	89	0.9871	0.9870	0.9869	0.9868	0.9866	0.9865	0.9864	0.9863	0.9862	0.9860
32.2	90	0.9866	0.9865	0.9864	0.9863	0.9862	0.9861	0.9860	0.9859	0.9857	0.9855
32.8	91	0.9862	0.9861	0.9859	0.9858	0.9857	0.9856	0.9855	0.9854	0.9852	0.9850
33.3	92	0.9857	0.9856	0.9855	0.9854	0.9853	0.9851	0.9850	0.9849	0.9847	0.9846
33.9	93	0.9853	0.9852	0.9850	0.9849	0.9848	0.9847	0.9846	0.9844	0.9843	0.9841
34.4	94	0.9848	0.9847	0.9846	0.9845	0.9843	0.9842	0.9841	0.9840	0.9838	0.9836
35.0	95	0.9844	0.9843	0.9841	0.9840	0.9839	0.9837	0.9836	0.9835	0.9833	0.9831
35.6	96	0.9839	0.9838	0.9837	0.9835	0.9834	0.9833	0.9831	0.9830	0.9828	0.9826
36.1	97	0.9835	0.9834	0.9832	0.9831	0.9829	0.9828	0.9827	0.9825	0.9823	0.9821
36.7	98	0.9830	0.9829	0.9828	0.9826	0.9825	0.9823	0.9822	0.9821	0.9819	0.9816
37.2	99	0.9826	0.9824	0.9823	0.9822	0.9820	0.9819	0.9817	0.9816	0.9814	0.9812
37.8	100	0.9821	0.9820	0.9818	0.9817	0.9816	0.9814	0.9813	0.9811	0.9809	0.9807
38.3	101	0.9817	0.9815	0.9814	0.9812	0.9811	0.9809	0.9808	0.9806	0.9804	0.9802
38.9	102	0.9812	0.9811	0.9809	0.9808	0.9806	0.9805	0.9803	0.9802	0.9799	0.9797
39.4	103	0.9808	0.9806	0.9805	0.9803	0.9802	0.9800	0.9799	0.9797	0.9795	0.9792
40.0	104	0.9803	0.9802	0.9800	0.9799	0.9797	0.9795	0.9794	0.9792	0.9790	0.9787
40.6	105	0.9799	0.9797	0.9796	0.9794	0.9792	0.9791	0.9789	0.9787	0.9785	0.9782
41.1	106	0.9794	0.9793	0.9791	0.9789	0.9788	0.9786	0.9784	0.9783	0.9780	0.9778
41.7	107	0.9790	0.9788	0.9787	0.9785	0.9783	0.9781	0.9780	0.9778	0.9775	0.9773
42.2	108	0.9785	0.9784	0.9782	0.9780	0.9778	0.9777	0.9775	0.9773	0.9771	0.9768
42.8	109	0.9781	0.9779	0.9777	0.9776	0.9774	0.9772	0.9770	0.9768	0.9766	0.9763
43.3	110	0.9776	0.9775	0.9773	0.9771	0.9769	0.9767	0.9766	0.9764	0.9761	0.9758
43.9	111	0.9772	0.9770	0.9768	0.9766	0.9765	0.9763	0.9761	0.9759	0.9756	0.9753
44.4	112	0.9767	0.9766	0.9764	0.9762	0.9760	0.9758	0.9756	0.9754	0.9751	0.9748
45.0	113	0.9763	0.9761	0.9759	0.9757	0.9755	0.9753	0.9751	0.9749	0.9747	0.9743
45.6	114	0.9758	0.9757	0.9755	0.9753	0.9751	0.9749	0.9747	0.9745	0.9742	0.9739
46.1	115	0.9754	0.9752	0.9750	0.9748	0.9746	0.9744	0.9742	0.9740	0.9737	0.9734
46.7	116	0.9749	0.9747	0.9745	0.9743	0.9741	0.9739	0.9737	0.9735	0.9732	0.9729
47.2	117	0.9745	0.9743	0.9741	0.9739	0.9737	0.9735	0.9732	0.9730	0.9727	0.9724
47.8	118	0.9740	0.9738	0.9736	0.9734	0.9732	0.9730	0.9728	0.9726	0.9722	0.9719
48.3	119	0.9736	0.9734	0.9732	0.9730	0.9727	0.9725	0.9723	0.9721	0.9718	0.9714
°C	**°F**	40	41	42	43	44	45	46	47	48	49

Table 541-10-6 VOLUME CORRECTION TO 60°F (15.6°C) - Continued

Observed Temperature		API Gravity at 60°F (15.6°C)									
		30	31	32	33	34	35	36	37	38	39
°C	°F	Factor for Correcting Indicated Volume to Volume at 60°F (15.6°C)									
-1.1	30	1.0145	1.0147	1.0149	1.0150	1.0152	1.0154	1.0155	1.0157	1.0159	1.0167
-0.6	31	1.0140	1.0142	1.0144	1.0145	1.0147	1.0149	1.0150	1.0152	1.0154	1.0161
0.0	32	1.0136	1.0137	1.0139	1.0140	1.0142	1.0144	1.0145	1.0147	1.0148	1.0156
0.6	33	1.0131	1.0132	1.0134	1.0135	1.0137	1.0138	1.0140	1.0142	1.0143	1.0150
1.1	34	1.0126	1.0127	1.0129	1.0130	1.0132	1.0133	1.0135	1.0136	1.0138	1.0145
1.7	35	1.0121	1.0123	1.0124	1.0125	1.0127	1.0128	1.0130	1.0131	1.0133	1.0139
2.2	36	1.0116	1.0118	1.0119	1.0120	1.0122	1.0123	1.0125	1.0126	1.0127	1.0134
2.8	37	1.0111	1.0113	1.0114	1.0115	1.0117	1.0118	1.0119	1.0121	1.0122	1.0128
3.3	38	1.0107	1.0108	1.0109	1.0110	1.0112	1.0113	1.0114	1.0115	1.0117	1.0123
3.9	39	1.0102	1.0103	1.0104	1.0105	1.0107	1.0108	1.0109	1.0110	1.0111	1.0117
4.4	40	1.0097	1.0098	1.0099	1.0100	1.0102	1.0103	1.0104	1.0105	1.0106	1.0111
5.0	41	1.0092	1.0093	1.0094	1.0095	1.0096	1.0098	1.0099	1.0100	1.0101	1.0106
5.6	42	1.0087	1.0088	1.0089	1.0090	1.0091	1.0092	1.0093	1.0095	1.0096	1.0100
6.1	43	1.0082	1.0083	1.0084	1.0085	1.0086	1.0087	1.0088	1.0089	1.0090	1.0095
6.7	44	1.0078	1.0079	1.0079	1.0080	1.0081	1.0082	1.0083	1.0084	1.0085	1.0089
7.2	45	1.0073	1.0074	1.0074	1.0075	1.0076	1.0077	1.0078	1.0079	1.0080	1.0084
7.8	46	1.0068	1.0069	1.0070	1.0070	1.0071	1.0072	1.0073	1.0074	1.0074	1.0078
8.3	47	1.0063	1.0064	1.0065	1.0065	1.0066	1.0067	1.0068	1.0068	1.0069	1.0073
8.9	48	1.0058	1.0059	1.0060	1.0060	1.0061	1.0062	1.0062	1.0063	1.0064	1.0067
9.4	49	1.0053	1.0054	1.0055	1.0055	1.0056	1.0057	1.0057	1.0058	1.0058	1.0061
10.0	50	1.0049	1.0049	1.0050	1.0050	1.0051	1.0051	1.0052	1.0053	1.0053	1.0056
10.6	51	1.0044	1.0044	1.0045	1.0045	1.0046	1.0046	1.0047	1.0047	1.0048	1.0050
11.1	52	1.0039	1.0039	1.0040	1.0040	1.0041	1.0041	1.0042	1.0042	1.0043	1.0045
11.7	53	1.0034	1.0034	1.0035	1.0035	1.0036	1.0036	1.0036	1.0037	1.0037	1.0039
12.2	54	1.0029	1.0029	1.0030	1.0030	1.0031	1.0031	1.0031	1.0032	1.0032	1.0034
12.8	55	1.0024	1.0025	1.0025	1.0025	1.0025	1.0026	1.0026	1.0026	1.0027	1.0028
13.3	56	1.0019	1.0020	1.0020	1.0020	1.0020	1.0021	1.0021	1.0021	1.0021	1.0022
13.9	57	1.0015	1.0015	1.0015	1.0015	1.0015	1.0015	1.0016	1.0016	1.0016	1.0017
14.4	58	1.0010	1.0010	1.0010	1.0010	1.0010	1.0010	1.0010	1.0011	1.0011	1.0011
15.0	59	1.0005	1.0005	1.0005	1.0005	1.0005	1.0005	1.0005	1.0005	1.0005	1.0006
15.6	60	1.0000	1.0000	1.0000	1.0000	1.0000	1.0000	1.0000	1.0000	1.0000	1.0000
16.1	61	0.9995	0.9995	0.9995	0.9995	0.9995	0.9995	0.9995	0.9995	0.9995	0.9994
16.7	62	0.9990	0.9990	0.9990	0.9990	0.9990	0.9990	0.9990	0.9989	0.9989	0.9989
17.2	63	0.9985	0.9985	0.9985	0.9985	0.9985	0.9985	0.9984	0.9984	0.9984	0.9983
17.8	64	0.9981	0.9980	0.9980	0.9980	0.9980	0.9979	0.9979	0.9979	0.9979	0.9978
18.3	65	0.9976	0.9975	0.9975	0.9975	0.9975	0.9974	0.9974	0.9974	0.9973	0.9972
18.9	66	0.9971	0.9970	0.9970	0.9970	0.9969	0.9969	0.9969	0.9968	0.9968	0.9966
19.4	67	0.9966	0.9966	0.9965	0.9965	0.9964	0.9964	0.9964	0.9963	0.9963	0.9961
20.0	68	0.9961	0.9961	0.9960	0.9960	0.9959	0.9959	0.9958	0.9958	0.9957	0.9955
20.6	69	0.9956	0.9956	0.9955	0.9955	0.9954	0.9954	0.9953	0.9953	0.9952	0.9950
21.2	70	0.9951	0.9951	0.9950	0.9950	0.9949	0.9948	0.9948	0.9947	0.9947	0.9944
21.7	71	0.9946	0.9946	0.9945	0.9945	0.9944	0.9943	0.9943	0.9942	0.9941	0.9938
22.2	72	0.9942	0.9941	0.9940	0.9939	0.9939	0.9938	0.9937	0.9937	0.9936	0.9933
22.8	73	0.9937	0.9936	0.9935	0.9934	0.9934	0.9933	0.9932	0.9931	0.9931	0.9927
23.3	74	0.9932	0.9931	0.9930	0.9929	0.9929	0.9928	0.9927	0.9926	0.9925	0.9922

Table 541-10-6 VOLUME CORRECTION TO 60°F (15.6°C) - Continued

Observed Temperature		API Gravity at 60°F (15.6°C)									
		30	31	32	33	34	35	36	37	38	39
°C	°F	Factor for Correcting Indicated Volume to Volume at 60°F (15.6°C)									
23.9	75	0.9927	0.9926	0.9925	0.9924	0.9923	0.9923	0.9922	0.9921	0.9920	0.9916
24.4	76	0.9922	0.9921	0.9920	0.9919	0.9918	0.9917	0.9916	0.9916	0.9915	0.9910
25.0	77	0.9917	0.9916	0.9915	0.9914	0.9913	0.9912	0.9911	0.9910	0.9909	0.9905
25.6	78	0.9912	0.9911	0.9910	0.9909	0.9908	0.9907	0.9906	0.9905	0.9904	0.9899
26.1	79	0.9907	0.9906	0.9905	0.9904	0.9903	0.9902	0.9901	0.9900	0.9899	0.9893
26.7	80	0.9902	0.9901	0.9900	0.9899	0.9898	0.9897	0.9896	0.9894	0.9893	0.9888
27.2	81	0.9898	0.9896	0.9895	0.9894	0.9893	0.9892	0.9890	0.9889	0.9888	0.9882
27.8	82	0.9893	0.9891	0.9890	0.9889	0.9888	0.9886	0.9885	0.9884	0.9882	0.9876
28.3	83	0.9888	0.9886	0.9885	0.9884	0.9883	0.9881	0.9880	0.9878	0.9877	0.9871
28.9	84	0.9883	0.9882	0.9880	0.9879	0.9877	0.9876	0.9875	0.9873	0.9872	0.9865
29.4	85	0.9878	0.9877	0.9875	0.9874	0.9872	0.9871	0.9869	0.9868	0.9866	0.9860
30.0	86	0.9873	0.9872	0.9870	0.9869	0.9867	0.9866	0.9864	0.9863	0.9861	0.9854
30.6	87	0.9868	0.9867	0.9865	0.9864	0.9862	0.9860	0.9859	0.9857	0.9856	0.9848
31.1	88	0.9863	0.9862	0.9860	0.9858	0.9857	0.9855	0.9854	0.9852	0.9850	0.9843
31.7	89	0.9858	0.9857	0.9855	0.9853	0.9852	0.9850	0.9848	0.9847	0.9845	0.9837
32.2	90	0.9854	0.9852	0.9850	0.9848	0.9847	0.9845	0.9843	0.9841	0.9839	0.9831
32.8	91	0.9849	0.9847	0.9845	0.9843	0.9841	0.9840	0.9838	0.9836	0.9834	0.9826
33.3	92	0.9844	0.9842	0.9840	0.9838	0.9836	0.9834	0.9833	0.9831	0.9829	0.9820
33.9	93	0.9839	0.9837	0.9835	0.9833	0.9831	0.9829	0.9827	0.9825	0.9823	0.9814
34.4	94	0.9834	0.9832	0.9830	0.9828	0.9826	0.9824	0.9822	0.9820	0.9818	0.9809
35.0	95	0.9829	0.9827	0.9825	0.9823	0.9821	0.9819	0.9817	0.9815	0.9813	0.9803
35.6	96	0.9824	0.9822	0.9820	0.9818	0.9816	0.9814	0.9811	0.9809	0.9807	0.9797
36.1	97	0.9819	0.9817	0.9815	0.9813	0.9811	0.9808	0.9806	0.9804	0.9802	0.9792
36.7	98	0.9814	0.9812	0.9810	0.9808	0.9805	0.9803	0.9803	0.9799	0.9796	0.9786
37.2	99	0.9809	0.9807	0.9805	0.9803	0.9800	0.9798	0.9796	0.9793	0.9791	0.9780
37.8	100	0.9804	0.9802	0.9800	0.9798	0.9795	0.9793	0.9790	0.9788	0.9786	0.9775
38.3	101	0.0800	0.9797	0.9795	0.9792	0.9790	0.9768	0.9785	0.9783	0.9780	0.9769
38.9	102	0.9795	0.9792	0.9790	0.9787	0.9785	0.9782	0.9780	0.9777	0.9775	0.9763
39.4	103	0.9790	0.9787	0.9785	0.9782	0.9780	0.9777	0.9775	0.9772	0.9769	0.9758
40.0	104	0.9785	0.9782	0.9780	0.9777	0.9775	0.9772	0.9769	0.9767	0.9764	0.9752
40.6	105	0.9780	0.9777	0.9775	0.9772	0.9769	0.9767	0.9764	0.9761	0.9759	0.9746
41.1	106	0.9775	0.9772	0.9770	0.9767	0.9764	0.9762	0.9759	0.9756	0.9753	0.9741
41.7	107	0.9770	0.9767	0.9765	0.9762	0.9759	0.9756	0.9754	0.9751	0.9748	0.9735
42.2	108	0.9765	0.9762	0.9760	0.9757	0.9754	0.9751	0.9748	0.9745	0.9742	0.9729
42.8	109	0.9760	0.9757	0.9754	0.9752	0.9749	0.9746	0.9743	0.9740	0.9737	0.9724
43.3	110	0.9755	0.9752	0.9749	0.9747	0.9744	0.9741	0.9738	0.9735	0.9732	0.9718
43.9	111	0.9750	0.9747	0.9744	0.9741	0.9738	0.9735	0.9732	0.9729	0.9726	0.9712
44.4	112	0.9745	0.9742	0.9739	0.9736	0.9733	0.9730	0.9727	0.9724	0.9721	0.9707
45.0	113	0.9740	0.9737	0.9734	0.9731	0.9728	0.9725	0.9722	0.9719	0.9715	0.9701
45.6	114	0.9735	0.9732	0.9729	0.9726	0.9723	0.9720	0.9717	0.9713	0.9710	0.9695
46.1	115	0.9731	0.9727	0.9724	0.9721	0.9718	0.9715	0.9711	0.9708	0.9705	0.9690
46.7	116	0.9726	0.9722	0.9719	0.9716	0.9713	0.9709	0.9706	0.9703	0.9699	0.9684
47.2	117	0.9721	0.9717	0.9714	0.9711	0.9707	0.9704	0.9701	0.9697	0.9694	0.9678
47.8	118	0.9716	0.9712	0.9709	0.9706	0.9702	0.9699	0.9695	0.9692	0.9688	0.9673
48.3	119	0.9711	0.9707	0.9704	0.9701	0.9697	0.9694	0.9690	0.9687	0.9683	0.9667

REAR SECTION

NOTE

TECHNICAL MANUAL DEFICIENCY/EVALUATION EVALUATION REPORT (TMDER) Forms can be found at the bottom of the CD list of books. Click on the TMDER form to display the form.