NAVAL SHIPS' TECHNICAL MANUAL

CHAPTER 555 - VOLUME 1

SURFACE SHIP FIREFIGHTING

THIS CHAPTER SUPERSEDES CHAPTER 555 VOLUME 1, DATED 25 FEBRUARY 1999

DISTRIBUTION STATEMENT C: DISTRIBUTION AUTHORIZED TO U.S. GOVERNMENT AGENCIES AND THEIR CONTRACTORS: ADMINISTRATIVE AND OPERATIONAL USE. (01 MAY 1988). OTHER REQUESTS FOR THIS DOCUMENT WILL BE REFERRED TO THE NAVAL SEA SYSTEMS COMMAND (SEA-03L4).

DESTRUCTION NOTICE: DESTROY BY ANY METHOD THAT WILL PREVENT DISCLOSURE OF CONTENTS OR RECONSTRUCTION OF THE DOCUMENT.

PUBLISHED BY DIRECTION OF COMMANDER, NAVAL SEA SYSTEMS COMMAND

7 SEP 1999

NAVSEA TECHNICAL MANUAL CERTIFICATION SHEET 1 of 1

Certification Applies to: New Manual ☐ Revision ☒ Change ☐

Applicable TMINS/Pub. No. S9086–S3–STM–010/CH–555V1R7

Publication Date (Mo, Da, Yr) September 7, 1999

Title: NSTM Chapter 555, Volume 1, Surface Ship Firefighting

TMCR/TMSR/Specification No:

CHANGES AND REVISIONS:

Purpose: Side bars in the outside margin indicate changes since the last revision. This revision makes changes as listed in Appendix C.

Equipment Alteration Numbers Incorporated:

TMDER/ACN Numbers Incorporated:

Continue on reverse side or add pages as needed.

CERTIFICATION STATEMENT

This is to certify that responsible NAVSEA activities have reviewed the above identified document for acquisition compliance, technical coverage, and printing quality. This form is for internal NAVSEA management use only, and does not imply contractual approval or acceptance of the technical manual by the Government, nor relieve the contractor of any responsibility for delivering the technical manual in accordance with the contract requirement.

Authority	Name	Signature	Organization	Code	Date
Acquisition	D. M. McCory	D. McCory	NAVSEA	03L4	9/7/99
Technical	D. M. McCory	D. McCory	NAVSEA	03L4	9/7/99
Printing Release	Digital Media Publishing				

Certification Sheet

TABLE OF CONTENTS

Chapter/Paragraph — Page

555V1 SURFACE SHIP FIREFIGHTING 1-1

SECTION 1. FIRE AND FIREFIGHTING AGENTS 1-1

555-1.1 INTRODUCTION 1-1
555-1.1.1 GENERAL. 1-1
555-1.1.2 GLOSSARY. 1-1
555-1.1.3 REFERENCE LIBRARY. 1-1
555-1.1.4 SUGGESTED PUBLICATIONS. 1-1
555-1.1.5 ADDITIONAL RESOURCES. 1-2
555-1.1.6 EARLIER SYSTEMS AND EQUIPMENT. 1-2
555-1.1.7 NEW SYSTEMS AND EQUIPMENT. 1-3

555-1.2 FIRE PREVENTION 1-3
555-1.2.1 MISSION. 1-3
555-1.2.2 UNAUTHORIZED MATERIALS. 1-3
555-1.2.3 FIRE PREVENTION PROGRAM. 1-3
555-1.2.3.1 Persian Gulf Advisory. 1-4

555-1.3 CHEMISTRY OF FIRE 1-5
555-1.3.1 OXIDATION. 1-5
555-1.3.2 START OF A FIRE. 1-5
555-1.3.3 COMBUSTION. 1-5
555-1.3.3.1 Radiation Heat. 1-5
555-1.3.3.2 Radiation Feedback. 1-5
555-1.3.4 SELF-SUSTAINING REACTION. 1-6

555-1.4 REQUIREMENTS FOR COMBUSTION 1-6
555-1.4.1 FIRE TRIANGLE. 1-6
555-1.4.2 FIRE TETRAHEDRON. 1-7
555-1.4.3 FUEL 1-8
555-1.4.3.1 Solid Fuels. 1-8
555-1.4.3.2 Liquid Fuels. 1-9
555-1.4.3.3 Flammable Gases. 1-10
555-1.4.3.4 Explosive Range (Flammable Range). 1-11
555-1.4.4 OXYGEN. 1-12
555-1.4.4.1 Oxidizing Materials. 1-12
555-1.4.5 HEAT. 1-12
555-1.4.5.1 Spontaneous Heating. 1-13
555-1.4.5.2 Ignition Temperature. 1-13
555-1.4.5.3 Spark Ignition. 1-13

555-1.5 HAZARDOUS PRODUCTS OF COMBUSTION 1-13
555-1.5.1 GENERAL. 1-13
555-1.5.2 FLAMES. 1-14
555-1.5.3 HEAT. 1-14

TABLE OF CONTENTS - Continued

Chapter/Paragraph		Page
555-1.5.4	GASES.	1-14
555-1.5.4.1	Carbon Monoxide.	1-14
555-1.5.4.2	Carbon Dioxide.	1-14
555-1.5.4.3	Other Fire Gases.	1-14
555-1.5.5	SMOKE.	1-15
555-1.6	CLASSIFICATION OF FIRES	1-15
555-1.6.1	GENERAL.	1-15
555-1.6.2	CLASS A FIRES.	1-15
555-1.6.3	CLASS B FIRES.	1-15
555-1.6.4	CLASS C FIRES.	1-15
555-1.6.5	CLASS D FIRES.	1-15
555-1.7	BURNING CHARACTERISTICS OF PROPELLANTS AND EXPLOSIVES	1-15
555-1.7.1	COMPOSITION OF PROPELLANTS AND EXPLOSIVES.	1-15
555-1.7.2	FIGHTING FLAMMABLE LIQUID AND WEAPONS FIRES.	1-16
555-1.7.3	HYPERGOLIC MIXTURES.	1-16
555-1.7.4	TORPEDO OTTO FUEL.	1-16
555-1.8	HEAT TRANSFER	1-17
555-1.8.1	GENERAL.	1-17
555-1.8.2	CONDUCTION.	1-17
555-1.8.3	RADIATION.	1-17
555-1.8.4	CONVECTION.	1-17
555-1.9	COMPARTMENT FIRE DYNAMICS	1-18
555-1.9.1	FIRE GROWTH IN A COMPARTMENT.	1-18
555-1.9.1.1	Growth Stage.	1-18
555-1.9.1.2	Flashover Stage.	1-19
555-1.9.1.3	Fully Developed Fire Stage.	1-19
555-1.9.1.4	Decay Stage.	1-19
555-1.9.2	THRESHOLDS.	1-19
555-1.9.3	BACKDRAFT.	1-20
555-1.10	FIRE SPREAD	1-20
555-1.10.1	GENERAL.	1-20
555-1.10.2	FIRE SPREAD BETWEEN COMPARTMENTS BY CONDUCTION.	1-21
555-1.10.3	FIRE SPREAD IN ELECTRICAL CABLEWAYS.	1-23
555-1.10.4	DIFFICULTIES ASSOCIATED WITH FIRES IN ELECTRICAL CABLEWAYS.	1-23
555-1.10.5	PREVENTION OF FIRE SPREAD IN ELECTRICAL CABLEWAYS.	1-23
555-1.11	THEORY OF EXTINGUISHMENT	1-24
555-1.11.1	METHODS.	1-24
555-1.11.2	REMOVING THE FUEL.	1-24
555-1.11.3	REMOVING THE OXYGEN.	1-24
555-1.11.4	REMOVING HEAT.	1-24

TABLE OF CONTENTS - Continued

Chapter/Paragraph Page

555-1.11.4.1 Water Extinguishing. 1-25
555-1.11.5 BREAKING THE COMBUSTION CHAIN REACTION. 1-25

555-1.12 FIREFIGHTING AGENTS 1-25
555-1.12.1 PRIMARY AGENTS. 1-25
555-1.12.2 WATER. 1-25
555-1.12.3 STRAIGHT STREAM. 1-25
555-1.12.3.1 Water Volume. 1-26
555-1.12.3.2 Electrical Hazard. 1-26
555-1.12.3.3 Effect on Class B Fires. 1-26
555-1.12.3.4 Heat Transfer Characteristics. 1-26
555-1.12.4 WATER FOG. 1-26
555-1.12.4.1 Electrical Hazard. 1-26
555-1.12.4.2 Use on Class A Fires. 1-26
555-1.12.4.3 Use on Flammable Liquids. 1-26
555-1.12.5 AQUEOUS FILM FORMING FOAM. 1-27
555-1.12.5.1 Description. 1-27
555-1.12.5.2 Firefighting Advantages. 1-27
555-1.12.5.3 Use of Aqueous Film Forming Foam. 1-27
555-1.12.5.4 Electrical Hazard. 1-27
555-1.12.5.5 Environmental Restrictions. 1-27
555-1.12.6 CARBON DIOXIDE. 1-27
555-1.12.6.1 General Characteristics. 1-27
555-1.12.6.2 Method of Extinguishing. 1-27
555-1.12.6.3 Use on Materials Producing Oxygen. 1-28
555-1.12.6.4 Personnel Hazards. 1-28
555-1.12.7 HALON. 1-28
555-1.12.7.1 Types of Halon. 1-28
555-1.12.7.2 Method of Extinguishing. 1-28
555-1.12.7.3 Use of Halon 1301. 1-28
555-1.12.7.4 Use of Halon 1211. 1-28
555-1.12.7.5 Halon Decomposition. 1-29
555-1.12.7.6 Personnel Hazards. 1-29
555-1.12.7.7 Ozone Depletion. 1-30
555-1.12.8 STEAM. 1-30
555-1.12.9 DRY CHEMICAL EXTINGUISHING AGENT, POTASSIUM BICARBONATE. 1-30
555-1.12.9.1 Additives. 1-30
555-1.12.9.2 Method of Extinguishing. 1-30
555-1.12.9.3 Use of Potassium Bicarbonate (PKP). 1-30
555-1.12.10 AQUEOUS POTASSIUM CARBONATE. 1-31

SECTION 2. FIRE EXTINGUISHING AND RELATED SYSTEMS DESCRIPTION AND OPERATION 1-31

555-2.1 WATERTIGHT AND FIRE ZONE BOUNDARIES 1-31
555-2.1.1 FUNCTION OF BOUNDARIES. 1-31

TABLE OF CONTENTS - Continued

Chapter/Paragraph Page

555-2.1.2 FIRE ZONE BOUNDARIES. 1-31
555-2.1.2.1 Fire Insulation on Fire Zone Boundaries. 1-31

555-2.2 VENTILATING SYSTEMS 1-32
555-2.2.1 VENTILATING BOUNDARIES. 1-32
555-2.2.2 IDENTIFICATION OF VENTILATING DUCTS. 1-32
555-2.2.3 MATERIAL CONDITION ZEBRA. 1-32

555-2.3 FIREMAIN SYSTEMS, SURFACE SHIPS 1-32
555-2.3.1 GENERAL. 1-32
555-2.3.2 FUNCTION OF THE FIREMAIN SYSTEM. 1-33
555-2.3.3 TYPES OF FIRE MAINS. 1-33
555-2.3.4 FIRE PUMPS. 1-38
555-2.3.4.1 Number and Size of Fire Pumps. 1-40
555-2.3.4.2 Navy Standard Fire Pumps (NSTFP). 1-40
555-2.3.4.3 Electric Motor-Driven Versus Steam Turbine-Driven Fire Pumps. 1-40
555-2.3.5 CROSS-CONNECTIONS, RISERS, AND BRANCHES. 1-41
555-2.3.5.1 Risers. 1-41
555-2.3.5.2 Branch Lines. 1-41
555-2.3.5.3 Magazines. 1-41
555-2.3.5.4 Fireplugs. 1-41
555-2.3.6 STRAINERS. 1-41
555-2.3.7 VALVES. 1-41
555-2.3.7.1 Cutout Valves. 1-42
555-2.3.7.2 Check Valves. 1-42
555-2.3.7.3 Pressure Regulating Valves. 1-42
555-2.3.7.4 Relief Valves. 1-42
555-2.3.8 SEGREGATION. 1-42
555-2.3.9 APPLICATION OF SEGREGATION. 1-42
555-2.3.9.1 Condition X-RAY, Classification X. 1-43
555-2.3.9.2 Condition Yoke, Classification Y. 1-43
555-2.3.9.3 Condition Zebra, Classification Z. 1-43
555-2.3.10 INSTRUMENTS AND CONTROLS FOR FIREMAIN. 1-43
555-2.3.10.1 Controls. 1-43
555-2.3.10.2 Instrumentation. 1-44
555-2.3.11 FIREMAIN OPERATION. 1-44
555-2.3.11.1 Performance Extremes. 1-44
555-2.3.11.2 Control From the Damage Control Deck. 1-44
555-2.3.11.3 Maintaining Positive Control of the Firemain. 1-45
555-2.3.11.4 Firemain Pressure. 1-45
555-2.3.12 FIREMAIN FAULTS. 1-46
555-2.3.12.1 Locating Firemain Faults. 1-46
555-2.3.12.2 Responding to Firemain Faults. 1-47
555-2.3.12.3 Fouling by Marine Growth. 1-48

555-2.4 OPERATION AND DESCRIPTION OF FOAM SYSTEMS 1-49

TABLE OF CONTENTS - Continued

Chapter/Paragraph Page

555-2.4.1 PURPOSE. 1-49
555-2.4.2 METHOD OF SUPPLY. 1-49
555-2.4.3 AQUEOUS FILM FORMING FOAM STATION ACTUATION. 1-54
555-2.4.3.1 Electrical Actuation. 1-54
555-2.4.4 HIGH CAPACITY AQUEOUS FILM FORMING FOAM PROPORTIONING SYSTEMS. 1-54
555-2.4.4.1 Tanks. 1-54
555-2.4.4.2 Pumps. 1-54

555-2.5 AQUEOUS FILM FORMING FOAM SERVICE OUTLETS 1-54
555-2.5.1 GENERAL. 1-54
555-2.5.2 SERVICE OUTLETS BELOW DECKS. 1-55
555-2.5.3 SERVICE OUTLETS FOR FLIGHT DECKS. 1-55
555-2.5.4 SERVICE OUTLET OPERATION. 1-55

555-2.6 AQUEOUS FILM FORMING FOAM SPRINKLER SYSTEMS 1-55
555-2.6.1 LOCATION, DESIGN, AND SUPPLY OF SPRINKLER SYSTEMS. 1-55
555-2.6.2 FLIGHT DECK SPRINKLING. 1-55
555-2.6.3 FLIGHT DECK NOZZLES. 1-55
555-2.6.4 FLIGHT DECK SPRINKLER DIAGRAMS. 1-56
555-2.6.5 FLIGHT DECK SPRINKLER OPERATION. 1-56
555-2.6.6 COUNTERMEASURE WASHDOWN. 1-56
555-2.6.7 FANTAIL SPRINKLER. 1-56
555-2.6.8 WEAPONS STAGING SPRINKLING. 1-56

555-2.7 AQUEOUS FILM FORMING FOAM SYSTEM ACTUATION CONTROLS 1-56
555-2.7.1 HIGH CAPACITY AFFF PROPORTIONING SYSTEM ACTUATION CONTROLS. 1-56
555-2.7.2 SPRINKLER SYSTEM CONTROLS. 1-57
555-2.7.3 MANUAL ACTUATION. 1-57
555-2.7.4 CONFLAGRATION STATION CONTROLS. 1-57
555-2.7.5 FP-180 AND 12 GPM SYSTEM CONTROLS. 1-57
555-2.7.6 AQUEOUS FILM FORMING FOAM POWER DISTRIBUTION SYSTEM. 1-57
555-2.7.7 ROOT VALVES. 1-57
555-2.7.8 TELEPHONES. 1-58
555-2.7.9 MAINTENANCE OF AQUEOUS FILM FORMING FOAM SYSTEMS. . . 1-58
555-2.7.10 HYDROGEN SULFIDE IN AFFF SYSTEMS 1-58
555-2.7.10.1 Health and Safety Hazards of Hydrogen Sulfide. 1-58
555-2.7.10.2 Mechanism of Hydrogen Sulfide Formation. 1-58
555-2.7.10.3 Safety Guidance During Maintenance and Testing of AFFF Systems 1-58
555-2.7.10.4 Safety Guidance When H_2 S Odor is Detected During Emergency Operation of AFFF Hoses or Sprinklers. 1-59

555-2.8 OPERATION, DESCRIPTION, AND SAFETY OF INSTALLED CARBON DIOXIDE SYSTEMS 1-59

TABLE OF CONTENTS - Continued

Chapter/Paragraph Page

555-2.8.1 GENERAL. 1-59
555-2.8.2 HEALTH AND SAFETY HAZARDS OF CARBON DIOXIDE 1-59
555-2.8.2.1 General. 1-59
555-2.8.2.2 Areas Susceptible to CO_2 Leakage. 1-60
555-2.8.2.3 Safety Precautions During Routine Work. 1-60
555-2.8.2.4 General Procedures During Maintenance Work. 1-61
555-2.8.2.5 Disabling. 1-61
555-2.8.2.6 Safety Precautions During Planned and Corrective Maintenance. 1-62
555-2.8.2.7 Safety Briefings. 1-63
555-2.8.2.8 Rescue. 1-64
555-2.8.3 CARBON DIOXIDE TOTAL FLOODING SYSTEM. 1-65
555-2.8.3.1 Remote Actuation. 1-66
555-2.8.3.2 Pressure Operated Switch. 1-66
555-2.8.3.3 Discharge Time Delay. 1-66
555-2.8.4 CARBON DIOXIDE HOSE REEL SYSTEM. 1-67

555-2.9 OPERATION AND DESCRIPTION OF HALON SYSTEMS 1-67
555-2.9.1 HALON 1301 SYSTEMS. 1-67
555-2.9.1.1 Components. 1-67
555-2.9.1.2 Location. 1-68
555-2.9.1.3 Installation Requirements. 1-68
555-2.9.1.4 Halon 1301 System Types. 1-68
555-2.9.1.5 System Actuation. 1-71
555-2.9.1.6 Additional Features. 1-71
555-2.9.1.7 Supplemental Systems. 1-71
555-2.9.1.8 Inadvertent Operation. 1-71
555-2.9.2 SYSTEM OPERATION. 1-71
555-2.9.3 OTHER FEATURES OF HALON SYSTEMS 1-72
555-2.9.3.1 Cylinder Handling System. 1-72
555-2.9.3.2 Recharging Halon Cylinders. 1-72
555-2.9.3.3 Recharging Actuator Cylinders. 1-72

555-2.10 SPRINKLER SYSTEM DESCRIPTIONS 1-73
555-2.10.1 PURPOSE. 1-73
555-2.10.2 ADDITIONAL REFERENCE. 1-73
555-2.10.3 DESCRIPTION OF DRY TYPE MAGAZINE SPRINKLER SYSTEMS (SEAWATER ACTUATOR). 1-73
555-2.10.3.1 Operating Stations. 1-73
555-2.10.3.2 Operating Pressure Circuit. 1-73
555-2.10.3.3 Actuation. 1-73
555-2.10.4 DESCRIPTION OF WET TYPE MAGAZINE SPRINKLER SYSTEM (SEAWATER ACTUATOR). 1-73
555-2.10.5 DESCRIPTION OF AUTOMATIC CONTROL SYSTEM. 1-73
555-2.10.6 DESCRIPTION OF MISCELLANEOUS SPRINKLING SYSTEMS. 1-74
555-2.10.6.1 Dry Type Miscellaneous Sprinkling System. 1-74
555-2.10.6.2 Wet Type Miscellaneous Sprinkling System. 1-74

TABLE OF CONTENTS - Continued

Chapter/Paragraph Page

555-2.11 OPERATION AND DESCRIPTION OF AQUEOUS POTASSIUM CARBONATE (APC) SYSTEMS 1-74
555-2.11.1 GENERAL. 1-74
555-2.11.2 DESCRIPTION. 1-76
555-2.11.3 SYSTEM OPERATION. 1-76
555-2.11.3.1 Automatic Operation. 1-76
555-2.11.3.2 Manual Operation. 1-76

555-2.12 MSC SHIP FIREFIGHTING SYSTEMS AND EQUIPMENT 1-76
555-2.12.1 GENERAL. 1-76
555-2.12.2 FOAMS. 1-76
555-2.12.3 FITTINGS. 1-77
555-2.12.4 PORTABLE EQUIPMENT. 1-77
555-2.12.5 DAMAGE CONTROL LOCKERS. 1-77
555-2.12.6 FIREFIGHTING PERSONNEL AND PROCEDURES. 1-77

555-2.13 PROTECTIVE DEVICES 1-77
555-2.13.1 FOR VALVES. 1-77
555-2.13.2 DESIGN. 1-78
555-2.13.3 FOR CONTROLS. 1-78

SECTION 3. FIRE EXTINGUISHING SYSTEM COMPONENT 1-78

555-3.1 AQUEOUS FILM FORMING FOAM SYSTEM COMPONENTS 1-78
555-3.1.1 INSTALLED FP-180 WATER MOTOR PROPORTIONER. 1-78
555-3.1.2 AQUEOUS FILM FORMING FOAM SINGLE SPEED INJECTION PUMP. 1-79
555-3.1.3 AQUEOUS FILM FORMING FOAM TWO SPEED INJECTION PUMP. . 1-79
555-3.1.4 AQUEOUS FILM FORMING FOAMING TRANSFER PUMPS. 1-80
555-3.1.5 BALANCED PRESSURE PROPORTIONER. 1-80
555-3.1.6 AQUEOUS FILM FORMING FOAM TANKS. 1-83
555-3.1.7 AQUEOUS FILM FORMING FOAM HOSE REELS. 1-83
555-3.1.8 AQUEOUS FILM FORMING FOAM HOSE NOZZLES. 1-83
555-3.1.9 AQUEOUS FILM FORMING FOAM CONTROL VALVES. 1-83
555-3.1.9.1 Powertrol Valve. 1-83
555-3.1.9.2 Powercheck Valve. 1-85
555-3.1.9.3 Hytrol Valve. 1-88
555-3.1.9.4 Hycheck Valve. 1-88
555-3.1.9.5 Solenoid Operated Pilot Valve. 1-89
555-3.1.10 AQUEOUS FILM FORMING FOAM SPRINKLERS. 1-90
555-3.1.10.1 Bilge Sprinklers. 1-91
555-3.1.10.2 Overhead Sprinklers. 1-91
555-3.1.10.3 Deck Edge Sprinklers. 1-91
555-3.1.10.4 Flush Deck Sprinklers. 1-91

555-3.2 CARBON DIOXIDE SYSTEM COMPONENTS 1-91
555-3.2.1 CARBON DIOXIDE TOTAL FLOODING SYSTEM COMPONENTS. . . . 1-91

TABLE OF CONTENTS - Continued

Chapter/Paragraph Page

555-3.2.1.1 Cylinder and Flood Valve. 1-93
555-3.2.1.2 Kidde Discharge Head (Plain Nut Type). 1-94
555-3.2.1.3 Kidde Cable Operated Control Head. 1-95
555-3.2.1.4 Ansul AP-6 Discharge Head. 1-95
555-3.2.1.5 Watertight Break Glass Pull Box. 1-95
555-3.2.1.6 Multiple Pull Mechanism. 1-95
555-3.2.1.7 Pressure Operated Switches. 1-96
555-3.2.1.8 Corner Pulleys. 1-96
555-3.2.1.9 Multijet Nozzles. 1-96
555-3.2.1.10 Discharge Time Delay. 1-96
555-3.2.1.11 Check Valve. 1-97
555-3.2.1.12 Automatic Door Latch. 1-97
555-3.2.2 CARBON DIOXIDE HOSE REEL SYSTEM COMPONENTS. 1-97
555-3.2.2.1 Cylinder and Flood Valve. 1-98
555-3.2.2.2 Discharge Head (Grooved Nut Type). 1-98
555-3.2.2.3 Hose and Hose Reel. 1-98
555-3.2.2.4 Discharge Horn with Squeeze Grip Control Valve. 1-98
555-3.2.2.5 Control Mechanism. 1-99
555-3.2.3 PRESSURE. 1-99

555-3.3 HALON 1301 SYSTEM COMPONENTS 1-100
555-3.3.1 BANKED AND MODULAR HALON SYSTEM COMPONENTS. 1-100
555-3.3.2 HALON COMPONENT REQUIREMENTS. 1-100
555-3.3.2.1 Manual Actuation Cylinder. 1-100
555-3.3.2.2 Manual/Solenoid Actuation Cylinder. 1-101
555-3.3.2.3 Metallic Hose. 1-102
555-3.3.2.4 1/4-Inch Check Valve. 1-102
555-3.3.2.5 Pressure Switch. 1-102
555-3.3.2.6 Carbon Dioxide Vent. 1-103
555-3.3.2.7 Time Delay Device. 1-103
555-3.3.2.8 Halon Cylinder and Valve. 1-104
555-3.3.2.9 1-1/2 Inch Check Valve. 1-105
555-3.3.2.10 Halon Nozzles. 1-105
555-3.3.2.11 Actuation Line Filter. 1-105

555-3.4 SPRINKLER SYSTEM COMPONENTS 1-105
555-3.4.1 COMPONENTS. 1-105
555-3.4.2 SYSTEM TYPES. 1-106
555-3.4.3 VALVE USAGE AND CONTROL SYSTEMS. 1-106
555-3.4.4 SPRINKLER VALVES. 1-106
555-3.4.4.1 MIL-V-17501 Valves. 1-106
555-3.4.4.2 Type I and Type II Valves. 1-106
555-3.4.4.3 Diaphragm Operated Valve. 1-106
555-3.4.4.4 Piston Operated Valve. 1-106
555-3.4.4.5 Electrically Operated Valves. 1-107
555-3.4.5 DRY TYPE SPRINKLER SYSTEM COMPONENTS (SEAWATER ACTUATOR). 1-107

TABLE OF CONTENTS - Continued

Chapter/Paragraph Page

555-3.4.5.1 Manual Control Valve (Three-Way Three-Position). 1-107
555-3.4.5.2 Remote Control Valve, Hydraulically Operated. 1-107
555-3.4.5.3 Spring Loaded Lift Check Valve. 1-108
555-3.4.5.4 Hydraulically Operated Check Valve. 1-108
555-3.4.5.5 Power Operated Check Valve. 1-108
555-3.4.5.6 Orifices. 1-108
555-3.4.6 WET TYPE SPRINKLER SYSTEM COMPONENTS (SEAWATER ACTUATOR). 1-108
555-3.4.6.1 Hydraulically Operated Control Valves. 1-108
555-3.4.6.2 Three-Way Hydraulic Control Valve. 1-108
555-3.4.6.3 Sprinkler Head Valve. 1-108
555-3.4.6.4 Gravity Freshwater Accumulator Tank. 1-109
555-3.4.6.5 Pressurized Freshwater Accumulator Tank. 1-109
555-3.4.7 AUTOMATIC CONTROL SYSTEM COMPONENTS FOR MAGAZINE SPRINKLING SYSTEMS. 1-109
555-3.4.7.1 Heat Sensing Device. 1-109
555-3.4.7.2 Transmission Lines. 1-109
555-3.4.7.3 Vented Check Valve. 1-109
555-3.4.7.4 Pneumatically Released Pilot Valve (PRP). 1-110

555-3.5 AQUEOUS POTASSIUM CARBONATE (APC) SYSTEM COMPONENTS 1-110
555-3.5.1 GENERAL. 1-110
555-3.5.2 BASIC SYSTEM COMPONENTS. 1-110
555-3.5.2.1 System Types. 1-110
555-3.5.2.2 Cylinder Assembly. 1-110
555-3.5.2.3 Cylinder. 1-110
555-3.5.2.4 Cylinder Valve. 1-110
555-3.5.2.5 Lever Control Head. 1-110
555-3.5.2.6 Pressure Switch. 1-111
555-3.5.3 DISCHARGE SYSTEM COMPONENTS. 1-111
555-3.5.3.1 Nozzles. 1-111
555-3.5.3.2 Detector Assemblies. 1-111
555-3.5.3.3 Cable Release System. 1-111
555-3.5.3.4 Pressure Release Control Box. 1-111
555-3.5.3.5 Remote Manual Control Box. 1-112

SECTION 4. MANUAL FIREFIGHTING EQUIPMENT 1-112

555-4.1 DRY CHEMICAL POTASSIUM BICARBONATE FIRE EXTINGUISHER 1-112
555-4.1.1 GENERAL. 1-112
555-4.1.2 DESCRIPTION. 1-113
555-4.1.3 OPERATION. 1-113
555-4.1.4 USE ON CLASS B FIRES. 1-113
555-4.1.5 USE ON CLASS A AND CLASS C FIRES. 1-113
555-4.1.6 GAS PRESSURE CARTRIDGE. 1-113

555-4.2 CARBON DIOXIDE FIRE EXTINGUISHER 1-114

TABLE OF CONTENTS - Continued

Chapter/Paragraph Page

555-4.2.1 GENERAL. 1-114
555-4.2.2 DESCRIPTION. 1-114
555-4.2.3 OPERATION. 1-114
555-4.2.4 USE ON CLASS B AND C FIRES. 1-115
555-4.2.5 STATIC ELECTRICITY EXPLOSIVE HAZARDS. 1-115
555-4.2.6 WEIGHING, TESTING AND RECHARGING CARBON DIOXIDE CYLINDERS (PORTABLE 15 POUND). 1-115
555-4.2.6.1 Weighing Cylinders. 1-116
555-4.2.6.2 Hydrostatic Testing of Carbon Dioxide Cylinders (Portable 15 Pound). 1-116
555-4.2.6.3 Transferring Carbon Dioxide. 1-116
555-4.2.6.4 Operating the Transfer Unit. 1-117
555-4.2.6.5 Planned Maintenance System. 1-118

555-4.3 AQUEOUS FILM FORMING FOAM FIRE EXTINGUISHER 1-118
555-4.3.1 GENERAL. 1-118
555-4.3.2 DESCRIPTION. 1-118
555-4.3.3 OPERATION. 1-119

555-4.4 FIRE HOSE STATIONS AND FIREPLUGS 1-120
555-4.4.1 GENERAL. 1-120
555-4.4.2 SHIPS WITH 2-1/2 INCH FIREPLUGS. 1-122
555-4.4.3 SHIPS WITH 1-1/2 INCH FIREPLUGS. 1-123
555-4.4.4 ADDITIONAL REQUIREMENTS. 1-123
555-4.4.5 IDENTIFICATION REQUIREMENTS. 1-123

555-4.5 FIRE HOSE 1-123
555-4.5.1 STANDARD NAVY HOSE. 1-123
555-4.5.2 NON-COLLAPSIBLE RUBBER HOSE. 1-123
555-4.5.3 HOSE FITTING THREADS. 1-123
555-4.5.4 HOSE STOCK NUMBERS. 1-124
555-4.5.5 SUCTION HOSE FOR PORTABLE PUMPS. 1-124
555-4.5.6 FAKING AND STOWING THE FIRE HOSE 1-124
555-4.5.6.1 Fire Hose at the Fire Hose Station. 1-124
555-4.5.6.2 Stowing a Hose. 1-124
555-4.5.7 HOSE MAINTENANCE. 1-125

555-4.6 FIRE HOSE FITTINGS 1-125
555-4.6.1 GENERAL. 1-125
555-4.6.2 DOUBLE FEMALE COUPLING. 1-126
555-4.6.3 DOUBLE MALE COUPLING. 1-126
555-4.6.4 STRAIGHT REDUCER COUPLING. 1-127
555-4.6.5 STRAIGHT INCREASER COUPLING. 1-127
555-4.6.6 WYE-GATE. 1-128
555-4.6.7 INTERNATIONAL SHORE CONNECTION. 1-128
555-4.6.8 SPANNER WRENCH. 1-128

TABLE OF CONTENTS - Continued

Chapter/Paragraph Page

555-4.7 PRESSURE LOSS 1-129
555-4.7.1 CHECKING HOSE PRESSURE 1-129
555-4.7.2 FRICTION LOSS. 1-130
555-4.7.3 APPRAISING THE WATER STREAM. 1-130
555-4.7.4 CAUSES FOR PRESSURE LOSS. 1-130

555-4.8 NAVY VARI-NOZZLES 1-130
555-4.8.1 GENERAL. 1-130
555-4.8.2 FLUSH SETTING. 1-132
555-4.8.3 VARI-NOZZLE DATA. 1-132
555-4.8.4 STOWAGE. 1-132
555-4.8.5 GASKETS. 1-133

555-4.9 NAVY ALL PURPOSE NOZZLE 1-133
555-4.9.1 GENERAL. 1-133
555-4.9.1.1 NAP Nozzle. 1-134
555-4.9.1.2 Wide Angle Fog Applicators. 1-134
555-4.9.1.3 Nozzle and Applicator Discharge Flow Rates. 1-135

555-4.10 PORTABLE AQUEOUS FILM FORMING FOAM INLINE EDUCTOR 1-137
555-4.10.1 GENERAL. 1-137
555-4.10.2 PICK-UP TUBE EXTENSION. 1-138

555-4.11 PORTABLE PUMPS 1-139
555-4.11.1 GENERAL. 1-139
555-4.11.2 P-100 PUMP. 1-139
555-4.11.2.1 Pump Performance. 1-139
555-4.11.2.2 Pump Assembly. 1-140
555-4.11.2.3 Engine. 1-140
555-4.11.2.4 Pump. 1-140
555-4.11.2.5 Exhaust Primer. 1-141
555-4.11.2.6 Fuel Tank. 1-141
555-4.11.2.7 Preparation of the P-100 Pump. 1-141
555-4.11.2.8 Operation of the P-100 Pump 1-141
555-4.11.2.9 Accessories. 1-142
555-4.11.2.10 Portable Pump Hookup for Firefighting. 1-144

555-4.12 FRESHWATER HOSE REEL SYSTEM 1-149

SECTION 5. FIREFIGHTING ORGANIZATION 1-149

555-5.1 INTRODUCTION 1-149
555-5.1.1 GENERAL. 1-149
555-5.1.1.1 Engineer Officer. 1-150
555-5.1.1.2 Damage Control Assistant. 1-150
555-5.1.1.3 Gas Free Engineer. 1-150
555-5.1.1.4 Fire Marshal. 1-150

TABLE OF CONTENTS - Continued

Chapter/Paragraph Page

555-5.2 CONDITION I — GENERAL QUARTERS 1-151

555-5.3 CONDITION V — IN PORT 1-151

555-5.4 REPAIR PARTY 1-151
555-5.4.1 GENERAL. 1-151
555-5.4.2 REPAIR PARTY LEADER (RPL). 1-152
555-5.4.3 REPAIR PARTY. 1-152
555-5.4.4 SCENE LEADER. 1-153
555-5.4.5 ATTACK TEAM. 1-153

555-5.5 AT-SEA FIRE PARTY 1-154

555-5.6 RAPID RESPONSE TEAM 1-154

555-5.7 OTHER FIRE PARTY FUNCTIONS 1-154
555-5.7.1 INVESTIGATORS. 1-154
555-5.7.2 FIRE BOUNDARYMEN. 1-154
555-5.7.3 COMMUNICATOR. 1-154
555-5.7.4 ELECTRICIAN. 1-154
555-5.7.5 NFTI OPERATOR. 1-154
555-5.7.6 ACCESSMAN. 1-154
555-5.7.7 REFLASH WATCH. 1-155
555-5.7.8 OVERHAULMEN. 1-155
555-5.7.9 SMOKE CONTROLMAN. 1-155

SECTION 6. FIRE PARTY EQUIPMENT 1-155

555-6.1 PERSONNEL PROTECTION 1-155
555-6.1.1 GENERAL. 1-155
555-6.1.2 PROTECTIVE EQUIPMENT. 1-155
555-6.1.3 FIREFIGHTER’S ENSEMBLE. 1-156
555-6.1.4 ENTERING FIRE AREA. 1-158
555-6.1.5 ADJUSTING PROTECTION. 1-158
555-6.1.6 EXCESSIVE HEAT EXPOSURE. 1-158
555-6.1.7 BW/CW THREAT. 1-158

555-6.2 NAVAL FIREFIGHTER’S THERMAL IMAGER (NFTI) 1-159
555-6.2.1 GENERAL. 1-159
555-6.2.2 STOWAGE. 1-160
555-6.2.3 DEPLOYMENT. 1-160
555-6.2.4 OPERATION. 1-160
555-6.2.5 LIMITATIONS. 1-161

SECTION 7. FIREFIGHTING TACTICS 1-161

555-7.1 INITIAL ACTIONS 1-161

TABLE OF CONTENTS - Continued

Chapter/Paragraph Page

555-7.2 FIRE ATTACK 1-162
555-7.2.1 REPORTS FROM FIRE SCENE. 1-162
555-7.2.2 FIRE ATTACK STEPS. 1-162
555-7.2.3 SIZE UP THE FIRE. 1-163
555-7.2.4 ATTACK THE FIRE. 1-163
555-7.2.4.1 Selecting the Appropriate Tactic. 1-163
555-7.2.5 ISOLATE EQUIPMENT, SYSTEMS AND SPACES. 1-164
555-7.2.5.1 Electrical Isolation. 1-164
555-7.2.5.2 Lighting. 1-164
555-7.2.5.3 Ventilation. 1-164
555-7.2.5.4 CBR Protection. 1-164
555-7.2.6 PROTECT COMPARTMENTS EXPOSED TO FIRE. 1-165
555-7.2.7 SET FIRE AND SMOKE BOUNDARIES 1-165
555-7.2.7.1 Fire Boundaries. 1-165
555-7.2.7.2 Smoke Boundaries. 1-166
555-7.2.8 CONTROL VERTICAL FIRE SPREAD. 1-167

555-7.3 HOSE HANDLING 1-167
555-7.3.1 GENERAL. 1-167
555-7.3.2 ACTION TO ENSURE READINESS 1-167
555-7.3.3 CONTROLLING THE HOSE 1-167
555-7.3.4 ADVANCING THE HOSE 1-168
555-7.3.5 TENDING THE HOSE 1-168

555-7.4 NOZZLE HANDLING 1-169

555-7.5 DIRECT ATTACK 1-174
555-7.5.1 GENERAL. 1-174
555-7.5.2 SHOCK HAZARD. 1-174
555-7.5.3 SPACE REENTRY. 1-174
555-7.5.4 DETERMINE DIRECT ATTACK TECHNIQUE. 1-175
555-7.5.5 DIRECT ATTACK ON SEAT OF THE FIRE. 1-179
555-7.5.6 FOG ATTACK (TO GAIN CONTROL OF FIRE). 1-179
555-7.5.7 DIRECT ATTACK FROM ACCESS. 1-180
555-7.5.8 BACKUP HOSE. 1-180
555-7.5.9 MULTIPLE HOSE COORDINATION. 1-180
555-7.5.10 RELIEFS. 1-181
555-7.5.11 WITHDRAWAL. 1-182
555-7.5.12 CHEMLIGHTS. 1-182
555-7.5.13 VENTING THE FIRE COMPARTMENT. 1-182

555-7.6 INDIRECT ATTACK 1-186
555-7.6.1 GENERAL GUIDANCE. 1-186
555-7.6.2 INDIRECT ATTACK THROUGH AN EXISTING ACCESS. 1-186
555-7.6.3 ATTACK THROUGH A HOLE CUT IN THE BULKHEAD OR OVERHEAD. 1-187

TABLE OF CONTENTS - Continued

Chapter/Paragraph Page

555-7.7 ACTIVE DESMOKING 1-187
555-7.7.1 INTRODUCTION. 1-187
555-7.7.2 ORGANIZATION. 1-187
555-7.7.3 TECHNIQUES. 1-188
555-7.7.4 PREPARE A DESMOKING FLOW PATH. 1-190
555-7.7.5 RIG PORTABLE DESMOKING EQUIPMENT. 1-203
555-7.7.6 ESTABLISH AND MAINTAIN DESMOKING. 1-205

555-7.8 ATTACKING FROM THE SPACE ABOVE THE FIRE 1-206

555-7.9 SEARCH AND RESCUE 1-207

555-7.10 FIRE OVERHAUL 1-207
555-7.10.1 FINAL EXTINGUISHMENT. 1-207
555-7.10.2 POST-FIRE DESMOKING. 1-207
555-7.10.3 POST-FIRE ATMOSPHERIC TESTING. 1-208
555-7.10.3.1 Locations for Atmospheric Testing. 1-209
555-7.10.4 DEWATER. 1-210
555-7.10.5 POST-FIRE INVESTIGATION. 1-210

555-7.11 ADDITIONAL CONSIDERATIONS FOR LARGE FIRES 1-210

555-7.12 ADDITIONAL CONSIDERATIONS FOR COLD WEATHER 1-211

555-7.13 ADDITIONAL CONSIDERATIONS FOR SHIPS WITH COLLECTIVE PROTECTION SYSTEMS WHEN A CBR THREAT EXISTS 1-211
555-7.13.1 GENERAL. 1-211
555-7.13.2 CBR BOUNDARIES. 1-212
555-7.13.3 VENTILATION SYSTEMS. 1-213
555-7.13.4 SMOKE CONTROL. 1-214

555-7.14 TYPICAL DIFFICULTIES IN FIREFIGHTING 1-214
555-7.14.1 DAMAGED FIRE PUMP MOTOR CONTROLLERS. 1-214
555-7.14.2 FIREFIGHTER FATIQUE. 1-214
555-7.14.3 RUPTURED FIREMAIN. 1-214
555-7.14.4 EXTREME HEAT. 1-215
555-7.14.5 COMMUNICATION. 1-215
555-7.14.6 VERTICAL TRUNKS. 1-216

SECTION 8. SPECIAL FIRE SCENARIOS 1-218

555-8.1 INTRODUCTION 1-218

555-8.2 ELECTRICAL FIRES 1-218
555-8.2.1 GENERAL. 1-218
555-8.2.2 PROCEDURE FOR FIGHTING AN ELECTRICAL EQUIPMENT FIRE. . 1-218
555-8.2.2.1 Emergency Access. 1-219

TABLE OF CONTENTS - Continued

Chapter/Paragraph Page

555-8.3 FLIGHT DECK FIRES 1-219

555-8.4 DEEP FAT FRYER FIRE 1-220

555-8.5 GAS TURBINE OR DIESEL ENGINE ENCLOSURE FIREFIGHTING 1-222

555-8.6 MINESWEEPER MACHINERY SPACE FIREFIGHTING DOCTRINE 1-223
555-8.6.1 MSO MACHINERY SPACE FIREFIGHTING 1-223
555-8.6.2 MCM MACHINERY SPACE FIREFIGHTING. 1-224
555-8.6.3 MHC DOCTRINE - MACHINERY SPACES-MMR, AMR, GENERATOR ROOMS 1-225
555-8.6.3.1 Fire in Engine Enclosures 1-225
555-8.6.3.2 Abandon Space Machinery Space Fire 1-225
555-8.6.3.3 MHC Machinery Space Installed Fire Protection Systems 1-226

555-8.7 FLAMMABLE GAS FIRES 1-226

555-8.8 VITAL ELECTRONICS SPACE FIRE FIGHTING DOCTRINE 1-227
555-8.8.1 GENERAL 1-227
555-8.8.2 ELECTRONICS CASUALTY CONTROL ORGANIZATION. 1-228
555-8.8.2.1 Commanding Officer (CO) or Tactical Action Officer (TAO). . . 1-228
555-8.8.2.3 Combat Systems Officer of the Watch (CSOOW) and Repair 8 Officer. 1-228
555-8.8.2.4 Space Supervisor/Repair 8 Personnel. 1-228
555-8.8.3 INITIAL ACTIONS - REPORT FIRE AND ITS LOCATION. 1-228
555-8.8.4 FIRE ATTACK. 1-228
555-8.8.4.1 Size Up the Fire. 1-229
555-8.8.4.2 Isolate Affected Equipment. 1-229
555-8.8.4.3 Attempt Extinguishment of the Localized Fire. 1-229
555-8.8.4.4 Fight Fire While Continuing Operation of Vital Equipment. . . . 1-229
555-8.8.4.5 Establish Fire and Smoke Boundaries. 1-230
555-8.8.4.6 Evacuate the Space If Fire Grows Out of Control. 1-231
555-8.8.4.7 Electronically and Mechanically Isolate Equipments or Space. . 1-231
555-8.8.4.8 Re-Enter Space and Extinguish Fire. 1-231

555-8.9 MK-50 TORPEDO FIREFIGHTING PROCEDURES 1-232
555-8.9.1 GENERAL. 1-232
555-8.9.2 FIRE SCENARIOS. 1-233
555-8.9.3 RECOMMENDED PROCEDURES. 1-233

555-8.10 GASOLINE (MOGAS) JETTISON RACK FIRE 1-234

555-8.11 MASS CONFLAGRATION 1-234
555-8.11.1 INTRODUCTION. 1-234
555-8.11.1.1 Scope. 1-234
555-8.11.1.2 Discussion. 1-235
555-8.11.1.3 Damage Control Command Structure. 1-235

TABLE OF CONTENTS - Continued

Chapter/Paragraph Page

555-8.11.1.4 Managing Resources. 1-236
555-8.11.1.5 Repair Party Organization. 1-236
555-8.11.1.6 Reduced Manning Concepts. 1-237
555-8.11.2 MASS CONFLAGRATION SCENARIO 1-237
555-8.11.2.1 Scenario Basis. 1-237
555-8.11.2.2 Immediate Damage. 1-271
555-8.11.2.3 Initial Actions. 1-271
555-8.11.2.4 Dispatching Investigators. 1-271
555-8.11.2.5 Responding to Investigator Reports. 1-272
555-8.11.2.6 Firefighting Response. 1-273
555-8.11.2.7 Firefighter Endurance and Managing Reliefs. 1-278
555-8.11.2.8 Evacuation of Personnel. 1-280
555-8.11.3 SUMMARY. 1-281

SECTION 9. FIRE DRILLS AND TRAINING 1-283

555-9.1 IMPORTANCE 1-283

555-9.2 REQUIRED FEATURES 1-283

555-9.3 MASS CONFLAGRATION FIREFIGHTING TRAINING 1-283

555-9.4 ANTI-SHIP WEAPONS THREATS 1-285
555-9.4.1 GENERAL. 1-285
555-9.4.2 MISSILE HITS. 1-285
555-9.4.3 FIREFIGHTING PROCEDURES. 1-286
555-9.4.4 AFFF INLINE EDUCTOR INSTALLATION. 1-286

555-9.5 VITAL ELECTRONICS SPACE FIREFIGHTING TRAINING 1-287

555-9.6 CRITIQUE 1-287

SECTION 10. MACHINERY SPACE FIREFIGHTING DOCTRINE FOR CLASS B FIRES IN SURFACE SHIPS 1-287

555-10.1 PURPOSE 1-287

555-10.2 INTRODUCTION 1-288

555-10.3 DISCUSSION 1-289
555-10.3.1 PREVENTION. 1-289
555-10.3.2 FIREFIGHTING SYSTEMS CAPABILITIES AND LIMITATIONS. 1-289
555-10.3.2.1 Water (Firemain System). 1-289
555-10.3.2.2 Carbon Dioxide. 1-289
555-10.3.2.3 Potassium Bicarbonate. 1-290
555-10.3.2.4 Aqueous Film Forming Foam. 1-290
555-10.3.2.5 Aqueous Film Forming Foam Bilge Sprinkling. 1-290

TABLE OF CONTENTS - Continued

Chapter/Paragraph Page

555-10.3.2.6 Halon 1301. 1-290
555-10.3.3 CONSIDERATIONS NECESSARY IN CHOOSING CORRECT FIREFIGHTING EQUIPMENT. 1-290
555-10.3.3.1 Small Pool Fires (Less Than 10 Square Feet). 1-290
555-10.3.3.2 Oil Spray Fires. 1-290
555-10.3.4 MAJOR OIL LEAK SCENARIO. 1-291
555-10.3.4.1 Report the Leak. 1-291
555-10.3.4.2 Man Foam Proportioning Station. 1-291
555-10.3.4.3 Secure the Source. 1-291
555-10.3.4.4 Apply Aqueous Film Forming Foam. 1-291
555-10.3.4.5 Concurrent Action. 1-291
555-10.3.4.6 Remove the Oil. 1-292
555-10.3.5 CLASS BRAVO FIRE SCENARIO. 1-292
555-10.3.5.1 Report the Fire. 1-292
555-10.3.5.2 Man Foam Proportioning Station. 1-292
555-10.3.5.3 Size Up the Fire. 1-292
555-10.3.5.4 Secure the Oil Source. 1-292
555-10.3.5.5 Concurrent Actions. 1-292
555-10.3.6 OUT-OF-CONTROL CLASS BRAVO FIRE SCENARIO. 1-294
555-10.3.6.1 Size of the Fire. 1-294
555-10.3.6.2 Evacuation. 1-294
555-10.3.7 SMOKE CONTROL. 1-295
555-10.3.7.1 Ventilation. 1-295
555-10.3.7.2 Smoke Boundaries. 1-296
555-10.3.8 SPACE ISOLATION. 1-296
555-10.3.8.1 Mechanical. 1-296
555-10.3.8.2 Electrical. 1-297
555-10.3.8.3 Fire Boundaries. 1-297
555-10.3.8.4 Fuel Tanks. 1-297
555-10.3.9 PERSONNEL PROTECTION AND FIREFIGHTING EQUIPMENT. 1-298
555-10.3.9.1 Breathing Protection. 1-298
555-10.3.9.2 Clothing. 1-298
555-10.3.9.3 Hoses. 1-298
555-10.3.10 REENTRY. 1-299
555-10.3.11 DESMOKING, ATMOSPHERIC TESTING, DEWATERING, REMANNING. 1-300
555-10.3.11.1 Desmoking. 1-300
555-10.3.11.2 Atmospheric Testing. 1-300
555-10.3.11.3 Dewatering. 1-301
555-10.3.11.4 Remanning. 1-301

A. LIST OF ABBREVIATIONS A-1

B. GLOSSARY B-1

C. SUMMARY OF CHANGES AND CROSS-REFERENCE C-1

TABLE OF CONTENTS - Continued

Chapter/Paragraph Page

D. INDEX D-1

LIST OF TABLES

Table	Title	Page
555-1-1	LISTING OF FIREFIGHTING REFERENCES	1-1
555-1-2	PROPERTIES OF SELECTED FLAMMABLE LIQUIDS AND GASES	1-11
555-1-3	TYPICAL UNLAGGED HOT SURFACE TEMPERATURES	1-13
555-1-4	HUMAN TOLERANCE TO CARBON MONOXIDE	1-14
555-1-5	IGNITION THRESHOLDS (PILOTLESS IGNITION WITHIN 30 SECONDS)	1-20
555-1-6	IGNITION OF PAPER VIA RADIANT HEAT	1-20
555-1-7	HUMAN TOLERANCE TO HEAT	1-20
555-1-8	THERMAL EFFECTS ON ELECTRONICS	1-20
555-2-1	MAXIMUM FLOODING RATES FOR VARIOUS PIPE SIZES	1-48
555-3-1	CARBON DIOXIDE CYLINDER TEMPERATURE VS PRESSURE COMPARISON	1-99
555-4-1	TYPICAL EQUIPMENT FOR FIRE HOSE STATIONS (OUTSIDE OF MACHINERY SPACES) ON LARGE SHIPS	1-121
555-4-2	TYPICAL EQUIPMENT FOR FIRE HOSE STATIONS (OUTSIDE OF MACHINERY SPACES) ON SMALL SHIPS	1-122
555-4-3	TYPICAL EQUIPMENT FOR FIRE HOSE STATIONS IN MACHINERY SPACES (ALL SHIPS)	1-122
555-4-4	HOSE FITTING THREADS	1-124
555-4-5	VARI-NOZZLE STREAM CHARACTERISTICS	1-131
555-4-6	VARI-NOZZLE DATA	1-132
555-4-7	VARI-NOZZLE GASKETS	1-133
555-4-8	ALL-PURPOSE NOZZLE STREAM CHARACTERISTICS	1-136
555-7-1.	COMPARISON OF DOORWAY FAN OPTIONS WHEN USED WITH SMOKE CURTAIN SEALS	1-204

LIST OF ILLUSTRATIONS

Figure	Title	Page
	Certification Sheet	0-2
555-1-1	Radiation Feedback	1-6
555-1-2	Requirements for Combustion	1-7
555-1-3	Tetrahedron and Fire Triangle	1-8
555-1-4	Chain Reaction	1-8
555-1-5	Pyrolysis	1-9
555-1-6	Vaporization	1-10
555-1-7	Stages of Compartment Fire Growth	1-18
555-1-8	Growth Stage-Compartment Fire	1-19
555-1-9	Fire Spread Through Metal Boundaries - Temperature vs. Time	1-21
555-1-10	Fire Spread Through Metal Boundaries - Radiant Heat vs. Time	1-22
555-1-11	Fire Spread Through Metal Boundaries - Ignition Threshold	1-22
555-1-12	Fire Spread Through Metal Boundaries - Heat Tolerance	1-23
555-2-1	Typical Single Main Firemain System	1-34
555-2-2	Typical Horizontal Loop Firemain System	1-35
555-2-3	Typical Vertical Offset Loop Firemain System	1-36
555-2-4	Typical Composite Firemain System	1-37
555-2-5	Typical Firemain Pump Riser	1-39
555-2-6	Typical Balanced Pressure Proportioner System	1-50
555-2-7	Typical Two Speed Aqueous Film Forming Foam System	1-51
555-2-8	Typical High Capacity Single Speed Pump System	1-52
555-2-9	Typical 12 GPM Single Speed Pump System	1-53
555-2-10	Typical Carbon Dioxide Total Flooding System	1-66
555-2-11	Typical Halon 1301 Modular System Configuration	1-69
555-2-12	Typical Halon 1301 Banked System	1-70
555-2-13	Typical Halon 1301 Actuating Station	1-72

LIST OF ILLUSTRATIONS - Continued

Figure	Title	Page
555-2-14	Aqueous Potassium Carbonate (APC) Fire Extinguishing System	1-75
555-3-1	Installed FP-180	1-78
555-3-2	Type II Balanced Pressure Proportioner Aqueous Film Forming Foam Concentrate Pump and Motor Assembly	1-79
555-3-3	Typical Two Speed and Single Speed Aqueous Film Forming Foam Concentrate Pump Unit	1-80
555-3-4	AFFF Balancing Valve	1-82
555-3-5	Powertrol Valve (Bailey Type)	1-84
555-3-6	Powertrol Valve (CLA-VAL Type)	1-85
555-3-7	Powercheck Valve	1-87
555-3-8	Hytrol Valve	1-88
555-3-9	Hycheck Valve	1-89
555-3-10	Solenoid Operated Pilot Valve	1-90
555-3-11	Kidde Pilot Cylinder Discharge, CO_2 Fixed Flooding System	1-92
555-3-12	Ansul Pilot Cylinder Actuation, CO_2 Fixed Flooding System	1-93
555-3-13	Typical Kidde Carbon Dioxide System Cable Operated Control Head	1-95
555-3-14	Typical Carbon Dioxide System Pressure Operated Switches	1-96
555-3-15	Typical Carbon Dioxide System Discharge Time Delay	1-97
555-3-16	Carbon Dioxide Hose Reel Installation	1-98
555-3-17	Manual Actuation Cylinder for Halon 1301 Systems	1-101
555-3-18	Manual/Solenoid Actuation Cylinder for Halon 1301 Systems	1-102
555-3-19	Pressure Switches	1-103
555-3-20	Old Style Time Delay (Halon 1301 Actuation Systems)	1-104
555-3-21	Piston Operated Magazine Sprinkler Valve	1-107
555-4-1	Typical Dry Chemical Fire Extinguisher	1-112
555-4-2	15-Pound Carbon Dioxide Extinguisher	1-114
555-4-3	Carbon Dioxide Transfer Unit	1-117
555-4-4	Typical Portable Aqueous Film Forming Foam Fire Extinguisher	1-119

LIST OF ILLUSTRATIONS - Continued

Figure	Title	Page
555-4-5	Typical Fire Hose Station	1-120
555-4-6	Preparing Fire Hose for Storage	1-125
555-4-7	Fire Hose Couplings	1-126
555-4-8	Double Female Coupling	1-126
555-4-9	Double Male Coupling	1-127
555-4-10	Straight Reducer Coupling	1-127
555-4-11	Straight Increaser Coupling	1-128
555-4-12	Wye-Gate	1-128
555-4-13	Adjustable Spanner Wrench	1-129
555-4-14	Navy Standard and Multi-Purpose Spanner Wrenches	1-129
555-4-15	2-1/2 Inch Navy Vari-Nozzle	1-131
555-4-16	1-1/2 Inch Navy Vari-Nozzle (pistol grip)	1-131
555-4-17	Operating Positions for Navy All-Purpose Nozzle	1-134
555-4-18	Navy All-Purpose Wide Angle Fog Applicators	1-135
555-4-19	Large Orifice Applicator Nozzle (1-1/2 Inch NAP Nozzle Applicator)	1-135
555-4-20	1-1/2 Inch Navy All-Purpose Nozzle Flow Patterns External and Internal Impingement Tip	1-136
555-4-21	AFFF Foam In-Line Eductor	1-137
555-4-22	Setup of AFFF In-Line Eductor	1-138
555-4-23	P-100 Portable Diesel Engine Driven Centrifugal Pump	1-139
555-4-24	P-100 Discharge Pressure	1-140
555-4-25	Wye-Gate and Tri-Gate Valves	1-143
555-4-26	P-100 Stowage	1-143
555-4-27	P-100 Spare Fuel Can	1-144
555-4-28	Firefighting Hookup	1-145
555-4-29	Firefighting Hookup for Suction Lifts Greater Than 20 Feet	1-146
555-4-30	P-100 Performance in High Lift Configuration	1-147

LIST OF ILLUSTRATIONS - Continued

Figure	Title	Page
555-4-31	P-100 Pump Dewatering	1-148
555-4-32	Dewatering Contaminated Liquids	1-149
555-6-1	Firefighter's Ensemble	1-157
555-6-2	Naval Firefighter's Thermal Imager	1-160
555-7-1	(A-D) Hose Line and Nozzle Handling Methods (Sheet 1 of 2)	1-170
555-7-1	(E-H) Hose Line and Nozzle Handling Methods (Sheet 2 of 2)	1-171
555-7-2	Fire Attack - Direct Attack on the Seat of the Fire	1-176
555-7-3	Fire Attack - Fog Attack To Control Fire	1-177
555-7-4	Fire Attack - Attack from an Access	1-178
555-7-5	Fire Attack - Direct Attack with Vent to Weather	1-183
555-7-6	Indirect Attack	1-184
555-7-7	Indirect Attack with Venting	1-185
555-7-8	View Showing Portable Suction Duct Through the Smoke Curtain Located in Door Frame	1-189
555-7-9	View Showing Relationship of Fire Space, Smoke Boundaries, and Smoke Control Zone	1-191
555-7-10	Active Desmoking for a Destroyer with the Fire in a Space on the Second Platform (Sheet 1 of 4)	1-192
555-7-10	Active Desmoking for a Destroyer with the Fire in a Space on the Second Platform (Sheet 2 of 4)	1-193
555-7-10	Active Desmoking for a Destroyer with the Fire in a Space on the Second Platform (Sheet 3 of 4)	1-194
555-7-10	Active Desmoking for a Destroyer with the Fire in a Space on the Second Platform (Sheet 4 of 4)	1-195
555-7-11	Active Desmoking for an Aircraft Carrier with the Fire in a Space on the 02 Level Amidships (Sheet 1 of 4)	1-196
555-7-11	Active Desmoking for an Aircraft Carrier with the Fire in a Space on the 02 Level Amidships (Sheet 2 of 4)	1-197
555-7-11	Active Desmoking for an Aircraft Carrier with the Fire in a Space on the 02 Level Amidships (Sheet 3 of 4)	1-198
555-7-11	Active Desmoking for an Aircraft Carrier with the Fire in a Space on the 02 Level Amidships (Sheet 4 of 4)	1-199

LIST OF ILLUSTRATIONS - Continued

Figure	Title	Page
555-7-12	Active Desmoking for an Amphibious Ship with the Fire in a Space on the Third Deck (Sheet 1 of 3)	1-200
555-7-12	Active Desmoking for an Amphibious Ship with the Fire in a Space on the Third Deck (Sheet 2 of 3)	1-201
555-7-12	Active Desmoking for an Amphibious Ship with the Fire in a Space on the Third Deck (Sheet 3 of 3)	1-202
555-7-13	View Showing Smoke Curtain and Box Fans Located in Door Frame	1-204
555-7-14	Vertical Trunk Hose Handling	1-217
555-8-1	Mass Conflagration Plan View at T=2 min.	1-238
555-8-1	Mass Conflagration Plan View at T=2 min.	1-239
555-8-1	Mass Conflagration Plan View at T=2 min.	1-240
555-8-1	Mass Conflagration Plan View at T=2 min.	1-241
555-8-1	Mass Conflagration Plan View at T=2 min.	1-242
555-8-1	Mass Conflagration Plan View at T=2 min.	1-243
555-8-2	Mass Conflagration Plan View at T=8 min.	1-244
555-8-2	Mass Conflagration Plan View at T=8 min.	1-245
555-8-2	Mass Conflagration Plan View at T=8 min.	1-246
555-8-2	Mass Conflagration Plan View at T=8 min.	1-247
555-8-2	Mass Conflagration Plan View at T=8 min.	1-248
555-8-2	Mass Conflagration Plan View at T=8 min.	1-249
555-8-3	Mass Conflagration Plan View at T=15 min.	1-250
555-8-3	Mass Conflagration Plan View at T=15 min.	1-251
555-8-3	Mass Conflagration Plan View at T=15 min.	1-252
555-8-3	Mass Conflagration Plan View at T=15 min.	1-253
555-8-3	Mass Conflagration Plan View at T=15 min.	1-254
555-8-3	Mass Conflagration Plan View at T=15 min.	1-255
555-8-4	Mass Conflagration Plan View at T=25 min.	1-256
555-8-4	Mass Conflagration Plan View at T=25 min.	1-257

LIST OF ILLUSTRATIONS - Continued

Figure	Title	Page
555-8-4	Mass Conflagration Plan View at T=25 min.	1-258
555-8-4	Mass Conflagration Plan View at T=25 min.	1-259
555-8-4	Mass Conflagration Plan View at T=25 min.	1-260
555-8-4	Mass Conflagration Plan View at T=25 min.	1-261
555-8-5	Summary of Repair Party 2 Manning (Sheet 1 of 3)	1-262
555-8-5	Summary of Repair Party 2 Manning (Sheet 2 of 3)	1-263
555-8-5	Summary of Repair Party 2 Manning (Sheet 3 of 3)	1-264
555-8-6	Summary of Repair Party 3 Manning (Sheet 1 of 3)	1-265
555-8-6	Summary of Repair Party 3 Manning (Sheet 2 of 3)	1-266
555-8-6	Summary of Repair Party 3 Manning (Sheet 3 of 3)	1-267
555-8-7	Summary of Repair Party 5 Manning (Sheet 1 of 3)	1-268
555-8-7	Summary of Repair Party 5 Manning (Sheet 2 of 3)	1-269
555-8-7	Summary of Repair Party 5 Manning (Sheet 3 of 3)	1-270
555-8-8	Modified Areas of Responsibility at T=7 Minutes	1-279
555-10-1	Procedures in a Class Bravo Fire (Sheet 1 of 9)	1-302
555-10-1	Procedures in a Class Bravo Fire (Sheet 2 of 9)	1-303
555-10-1	Procedures in a Class Bravo Fire (Sheet 3 of 9)	1-304
555-10-1	Procedures in a Class Bravo Fire (Sheet 4 of 9)	1-305
555-10-1	Procedures in a Class Bravo Fire (Sheet 5 of 9)	1-306
555-10-1	Procedures in a Class Bravo Fire (Sheet 6 of 9)	1-307
555-10-1	Procedures in a Class Bravo Fire (Sheet 7 of 9)	1-308
555-10-1	Procedures in a Class Bravo Fire (Sheet 8 of 9)	1-309
555-10-1	Procedures in a Class Bravo Fire (Sheet 9 of 9)	1-310

CHAPTER 1

SURFACE SHIP FIREFIGHTING

SECTION 1.
FIRE AND FIREFIGHTING AGENTS

555-1.1 INTRODUCTION

555-1.1.1 GENERAL. This volume provides guidance for firefighting equipment and procedures on surface ships. **NSTM Chapter 555 Volume 2, Submarine Firefighting** , provides similar guidance for submarines.

555-1.1.2 GLOSSARY. See the glossary (**Appendix B**) for definition of terms as used in this manual.

555-1.1.3 REFERENCE LIBRARY. A reference library for fire prevention training, firefighting techniques and firefighting equipment should be established and maintained on board ship. This library should contain publications and instructions issued by the naval establishment and equipment manufacturers.

555-1.1.4 SUGGESTED PUBLICATIONS. Information provided should cover firefighting equipment and systems specific to each ship. In addition to the Ship's Information Book, the Damage Control Books, all chapters of the Naval Ship's Technical Manual (NSTM), Maintenance Index Pages (MIP's), a partial list of suitable publications is contained in Table 555-1-1.

Table 555-1-1 LISTING OF FIREFIGHTING REFERENCES

NFPA Fire Protection Handbook National Fire Protection Association (current edition)	NAVSEA S9555-AN-MMO-010 Foam Liquid Proportioner 60-180 gpm, (for ships so equipped)
Fire Protection Guide on Hazardous Materials Published by National Fire Protection Association	NAVSEA S9555-AT-MMA-010 HALON 1301 Fire Extinguishing System (for ships equipped with Ansul/Wormald equipment)
DOD 6050.5-CD Hazardous Material Control and Management	NAVSEA S9555-A6-MMA-010 HALON 1301 Fire Extinguishing Systems (for ships equipped with Wormald equipment)
OPNAVINST 3440.15 Minimum Criteria and Standards for Navy and Marine Corps Nuclear Weapons Accident and Incident Response	NAVSEA S9555-AR-MMO-010 Fire Extinguishing System, Deep Fat and Doughnut Fryer
OPNAVINST 5100.19 and OPNAVINST 3040 U.S. Navy Safety Precautions	NAVSEA S9555-B9-MMA-010/AFFF Maintenance Manual for AFFF Balanced Pressure Proportioning System Type II and Type III
NWP 3-20.31 Surface Ship Survivability	NAVSEA S9555-D1-MMO-010 Carbon Dioxide Fixed Flooding System and Hose Reel System
Naval Warfare Publication FXP 4 Mobility (Mob), Logistics (Log), Fleet Support Operations (FSO), Non-Combat Operations (NCO), and Explosive Ordnance Disposal (EOD) Exercises	NAVSEA S9555-D3-MM0-010 Improved Carbon Dioxide Fixed Flooding System and Hose Reel System

Table 555-1-1 LISTING OF FIREFIGHTING REFERENCES - Continued

NAVEDTRA 43119-4A Personnel Qualification Standard for Damage Control	NAVSEA OP-4 Ammunition Afloat
NAVSEA 0947-LP-228-7010 AFFF Pump Model X2NFJ-NHRB Part # E-4154, Installation, Operation and Maintenance with Parts List	SWOP 20-11 Firefighting Control Guidance, Nuclear Weapons
NAVSEA S0300-A6-MAN-030 US Navy Ship Salvage Manual - Volume 3, Firefighting and Damage Control	NAVAIR 00-80-R-14 NATOPS U.S. Navy Aircraft Firefighting and Rescue Manual
NAVSEA S6226-NM-MMC-010 Pump Centrifugal, Portable Unit, Model P-100 (2BE10YD); Description, Operation, and Maintenance	NAVSEA DWG 803-2145520 Fire Extinguishing Systems for Machinery Spaces with Aqueous Film Forming Foam (AFFF)
NAVSEA S6340-AA-MMA-010 Otto Fuel II Safety, Storage, and Handling Instructions	Military Sealift Command Instruction COMSCINST 3541.2, Damage Control Manual
NAVSEA S6435-B1-MMO-010 Solenoid Operated Pilot Valve, Model CSM5M-3A	Navy Training Video, PIN 801578, Main Space Fires
NAVSEA S9000-AB-GTP-010 Shipboard Safety and Damage Control for Stowage of Hypergolic Fueled Missiles and Fuel-Air-Explosive (FAE) Bombs	Navy Training Video, PIN 805433, Improved Shipboard Firefighting Using the Naval Firefighter's Thermal Imager
NAVSEA S9522-AA-HBK-010 Description, Operation and Maintenance, Handbook For Magazine Sprinkling Systems	Navy Training Video, PIN 805597, Fire Hose Advancement Down a Vertical Trunk - Naval Ships

555-1.1.5 ADDITIONAL RESOURCES. The library should contain audiovisual firefighting and damage control training aids. The Naval Education and Training Support Centers are the distribution facilities for audiovisual equipment. The San Diego center supplies the West Coast and the Pacific Ocean; the Norfolk center supplies the Mediterranean and fleet requests east of the Mississippi.

555-1.1.6 EARLIER SYSTEMS AND EQUIPMENT. Some ships may have equipment and systems that predate those described in this chapter. The lack of discussion about this type of equipment or installation does not indicate that it is no longer required or effective. Replacements and alterations are not required until repair and maintenance is no longer economical or until specifically directed.

555-1.1.6.1 Ships having such equipment should refer to the manufacturers' operating manuals. If information is not available in these manuals, the Naval Sea Systems Command (NAVSEA) should be informed of the deficiencies. The following equipment and material is not discussed in this manual.

a. Twin Agent Hose Reels

b. Fixed Fog Sprinkler Systems

c. Versatile Avionic Shop Test (VAST) Halon Systems

d. Marine Strainers on Fireplugs

e. 2-1/2 inch Navy All-Purpose Nozzle

f. PE-250 Portable Pump

g. P-250 Portable Pump

555-1.1.7 NEW SYSTEMS AND EQUIPMENT. The following new equipment is discussed in this manual.

a. Aqueous Film Forming Foam (AFFF) Portable Extinguisher

b. P-100 Portable Pump

555-1.2 FIRE PREVENTION

555-1.2.1 MISSION. Many ships have been lost by fire. Fleet loss experience indicates that, fire has caused more damage than groundings, collisions, or flooding. Experience has also indicated that steel ships can become floating furnaces, fed by the combustible materials carried on board. Some ships have become blazing infernos which had to be abandoned and later sunk by their own forces because fires grew out of control and prevented the effective application of damage control procedures. Fire prevention and firefighting have proved essential for the survival of ships in combat. Continued efforts shall be made to minimize fire hazards and the damage that results from fires.

555-1.2.2 UNAUTHORIZED MATERIALS. The Commanding Officer shall ensure that the installation or application of unauthorized or unapproved wood, bedding materials, upholstery, plastics, fibrous materials, paints, coatings, tile and adhesives, paneling, false bulkheads or overheads are not installed or carried in the ship. Any non-regulation or unapproved materials which are or may be installed shall be reported or submitted to NAVSEA for approval. All habitability materials shall comply with the fire performance requirements of MIL-STD-1623, **Fire Performance Requirements and Approved Specifications for Interior Finish Materials and Furnishings (Naval Shipboard Use)** .

555-1.2.3 FIRE PREVENTION PROGRAM. Each ship is required to institute and maintain a fire prevention program. Each ship department head shall be responsible for implementing the fire prevention program. That program should heighten awareness of ship's personnel in the following areas.

a. Reduction of fire hazards according to **NSTM Chapter 079, Volume 2, Damage Control-Practical Damage Control** .

b. Stowage, handling, classification and labeling of hazardous materials as described in **NSTM Chapter 670, Stowage, Handling and Disposal of Hazardous General Use Consumables** , including inventorying and removal of obsolete, outdated or excess materials.

c. Control of ignition sources by training personnel to be alert to hazards such as equipment temperature rising beyond prescribed levels, cutting and welding sparks, faulty wiring, friction due to inadequate lubrication, and smoking lamp violations.

d. Shipboard fuel fire prevention program as described in **NSTM Chapter 541, Ship Fuel and Fuel Systems** .

e. Hotwork precautions and firewatch training as described in **NSTM Chapter 074, Volume 1, Welding and Allied Processes** .

f. Removal of trash, fuels and lubricants in drip pans; maintenance actions to reduce leakage from motors, couplings, gear boxes, flanges and valves.

g. Maintenance and operation of portable fire extinguishers.

h. Frequent and regular inspection of all spaces to identify and correct hazardous conditions.

i. Procedures to follow for sounding and transmitting a fire alarm signal.

j. Fire Prevention requirements for gas free engineering as described in **NSTM Chapter 074, Volume 3, Gas Free Engineering** .

555-1.2.3.1 Persian Gulf Advisory. The following guidance was generated in support of combat operations in the Persian Gulf in 1991. Command attention to basic tenets of fire prevention will serve to minimize the fire effects of combat damage and lessen the likelihood of accidental self-induced fires. Sounding security patrols, fire marshal inspections, and zone inspections should be extra diligent in detecting and reporting fire hazards. Even small fires can prevent battle group ships from fully carrying out their mission.

a. Onboard stockpiling of critical war supplies may create fire hazards due to the inrush of large quantities of combustible material. Special care is needed to assure good housekeeping and prevention of smoking and hot work in the vicinity of temporary stowage. All hands should strive to prevent uncontrolled proliferation of combustibles throughout the ship.

b. Prohibiting the stowage of materials in uptakes should be strictly enforced. Experience has shown that fires often start in or spread to uptake spaces. These fires can be especially devastating since vital electrical circuits frequently pass through uptake spaces.

c. All hands should be aware of the combustibility of packaging materials used in supply items. Even noncombustible metal parts are commonly shipped in cardboard boxes with burnable fragile pack filler. Supply items should be unpacked as soon as possible so combustible packaging can be disposed of readily.

d. Avoid stowage of combustibles below raised floors in vital electronics spaces. Experience has shown that raised floor spaces are a tempting location for ready stowage of vital space supplies and personal articles. Such stowage significantly increases the fire threat to these spaces.

e. Battle damage reports from World War II indicated that combat-induced shock frequently caused class C fires throughout the ship due to loose connections and shorting and grounding of electrical wiring and equipment. Care should be taken to avoid stowage of combustibles in close proximity to equipment which may arc and spark. Electricians should inspect electrical power and distribution equipment for loose wires or connectors and missing covers.

f. Should open hostilities occur, Fleet units should follow type commander strip ship bills. Only essential combustible materials should be retained onboard. The potential fuel contribution of these combustibles (such as paper products, technical manuals, books, bed linens, clothing, etc) can be significantly reduced by stowage in steel metal cabinets, file cabinets, lockers, and desk drawers. It is imperative that combustible materials not be placed in direct contact with decks and bulkheads. A standoff distance of at least one foot is recommended to retard fire spread from compartment to compartment.

g. Compartments such as machinery spaces and fuel pump rooms, where flammable liquid is pumped or piped under pressure, are especially hazardous, and warrant around-the-clock fire prevention efforts. Good housekeeping is a must. Fuel spills should be cleaned up and sources of leakage identified and corrected immediately. All hot surfaces should be lagged in accordance with **NSTM Chapter 635** (including valves and flanged surfaces). Flange spray shields must be properly installed. Sounding tubes terminating in machinery spaces must be floating ball check valves. Remote quick closing fuel valves should be checked to assure proper operation. EOSS procedures should be followed closely, especially during any fuel transfer operations. Proper valve alignment for fuel transfer requires hand-over-hand verification. The structural integrity of fuel system piping should be confirmed. Suspect piping should not be used. Fuel transfer (whether internal or ship-to-ship) should be terminated immediately upon notification of a fire anywhere on the ship.

h. ACN 3/A to **NSTM Chapter 505, Piping Systems** , was issued in November 1990 to highlight precautions relevant to repair of components in fuel systems. Specific issues addressed in the revision are (1) a firm requirement for two pressure barriers on each side of a valve undergoing maintenance or repair, (2) a prohi-

bition against using butterfly valves as an isolation barrier, (3) the need for proper tag out, and (4) a warning about possible stem expulsion from old style butterfly valves.

i. Flammable liquids shall be stowed in accordance with Section 4 of **NSTM Chapter 670** . In-use flammables not in storerooms, shall be stowed in NAVSEA approved flammable liquid cabinets. However, during strip ship conditions, all flammable liquids in in-use cabinets shall be off-loaded or relocated into flammable liquid storerooms. Additionally, cabinets in machinery spaces shall not contain liquids having flashpoints below 200°F.

j. In past incidents, fire has spread through non-tight bulkhead penetrations. Ship's force should conduct a visual inspection of electrical cable multi-cable transits and stuffing tubes, especially in vital space boundaries.

555-1.3 CHEMISTRY OF FIRE

555-1.3.1 OXIDATION. Oxidation is a chemical process in which a substance combines with oxygen. During this process, energy is given off, usually in the form of heat. The rusting of iron and the rotting of wood are common examples of slow oxidation. Fire or combustion involves rapid oxidation with the evolution of heat and light. Typically, fire involves rapid oxidation at temperatures above 1,500°F accompanied by the evolution of highly heated products of combustion and the emission of visible and invisible radiation. The combustion process occurs in two modes, flaming and surface combustion (including deep-seated glowing embers).

555-1.3.2 START OF A FIRE. All matter exists in one of three states; solid, liquid, or gas (vapor). The atoms or molecules of a solid are packed closely together, and those of a liquid are packed loosely. The molecules of a vapor are not packed together at all. They are free to move about. In order for a substance to burn, its molecules must be well surrounded by oxygen molecules. The molecules of solids and liquids are too tightly packed to be surrounded; therefore, only vapors can burn.

555-1.3.2.1 When a solid or liquid is heated, its molecules move about rapidly. If enough heat is applied, some molecules break away from the surface to form a vapor just above the surface. This vapor can now mix with oxygen. If there is enough heat to raise the vapor to its ignition temperature, and if there is enough oxygen present, the vapor will ignite.

555-1.3.3 COMBUSTION. Combustion involves the rapid oxidation of millions of vapor molecules. The molecules oxidize by breaking apart into individual atoms and recombining with oxygen into new molecules. It is during the breaking and recombining process that energy is released as heat and light.

555-1.3.3.1 Radiation Heat. The heat that is released is radiant heat, the same form of energy that is radiated by the sun. Heat radiates in all directions. Part of the heat radiates back to the seat of the fire, to the burning solid or liquid.

555-1.3.3.2 Radiation Feedback. The heat that radiates back to the fuel is called radiation feedback (see Figure 555-1-1). Part of this heat releases more vapor, and part of it raises the vapor to the ignition temperature. At the same time, air is drawn into the area where the flames and vapor meet. The result is the newly formed vapor begins to burn. The flames increase.

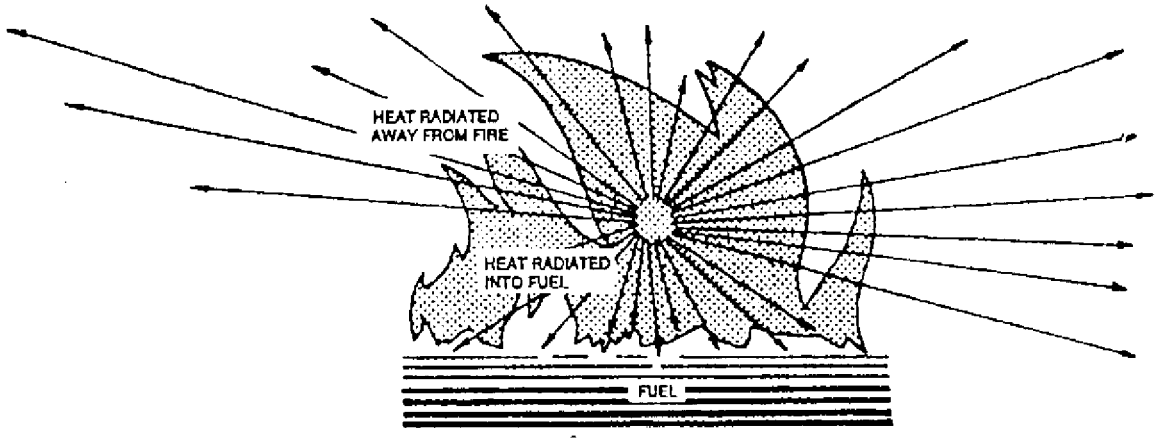

Figure 555-1-1 Radiation Feedback

555-1.3.4 SELF-SUSTAINING REACTION. A self-sustaining reaction starts in which burning vapor produces heat which releases and ignites more vapor. The additional vapor burns, producing more heat, which releases and ignites still more vapor. This process continues until all available fuel or oxygen has been consumed or the fire has been extinguished. When the combustion process is confined so that a rapid pressure rise occurs, it is called an explosion.

555-1.3.4.1 Flammable gases burn more intensely than solids or liquids, because they are already in the vapor state. All the radiation feedback goes into igniting the vapor, so it is more fully ignited. Gases burn without smoldering or leaving residues. The size and intensity of a gas fire depend on the amount of fuel available.

555-1.4 REQUIREMENTS FOR COMBUSTION

555-1.4.1 FIRE TRIANGLE. From the preceding section, three things are required for combustion: fuel (to vaporize and burn), oxygen (to combine with fuel vapor), and heat (to raise the temperature of the fuel vapor to its ignition temperature). The fire triangle (see Figure 555-1-2) illustrates these requirements. It also illustrates two facts of importance in preventing and extinguishing fires:

a. If any side of the fire triangle is missing, a fire cannot start.

b. If any side of the fire triangle is removed, the fire will go out.

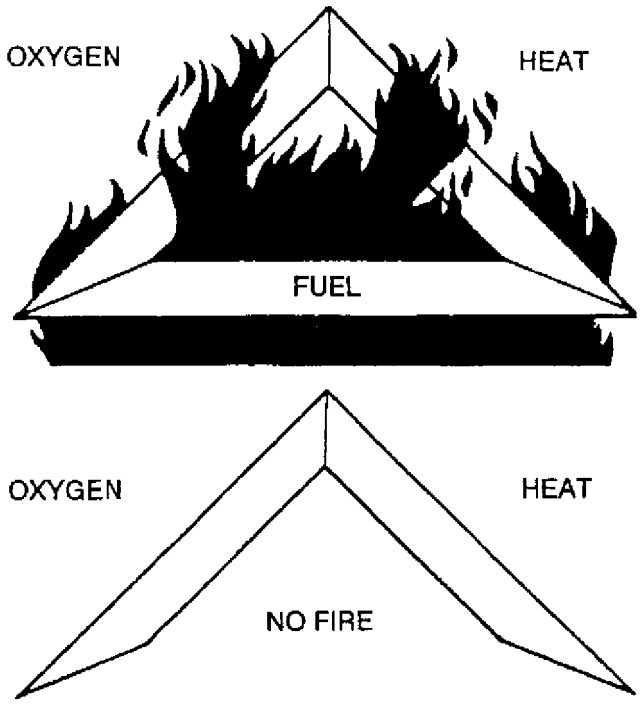

Figure 555-1-2 Requirements for Combustion

555-1.4.2 FIRE TETRAHEDRON. The fire triangle is acceptable for describing requirements for surface glowing or smoldering, but does not completely describe flaming combustion requirements. A fourth requirement, an uninhibited chemical chain reaction, is needed for flames to exist. This is illustrated by the fire tetrahedron, Figure 555-1-3. A tetrahedron is a solid figure with four triangular faces. It is useful for illustrating the flaming combustion process because it provides for the chemical chain reaction requirement and each face touches the other three sides. As described for the fire triangle, flaming combustion stops when one of the four sides of the fire tetrahedron is removed. Halon and dry chemical fire extinguishing agents work by interrupting the chemical chain reaction. See Figure 555-1-4.

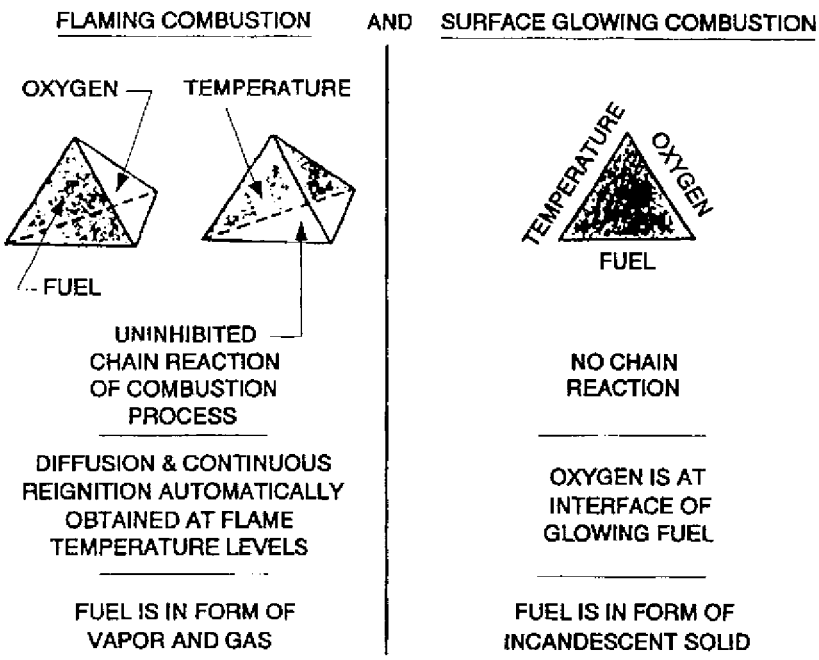

Figure 555-1-3 Tetrahedron and Fire Triangle

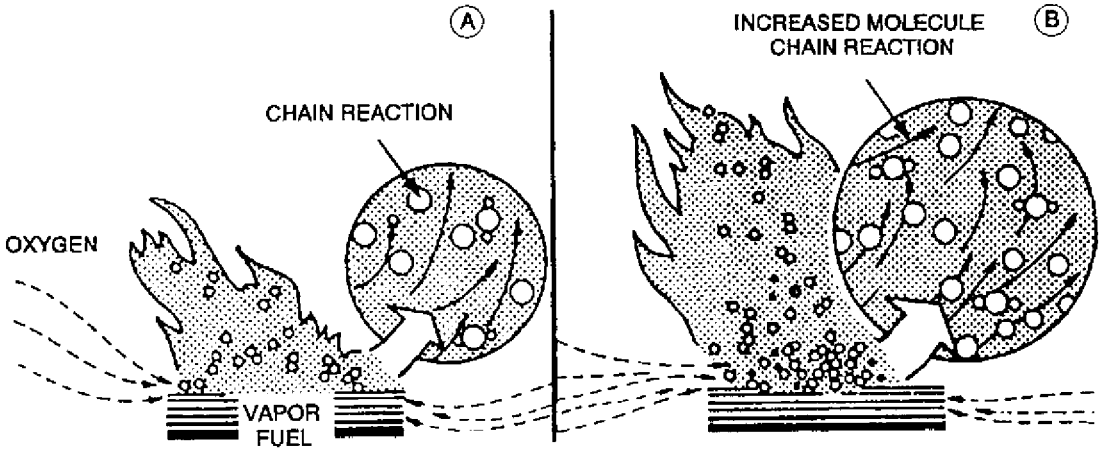

Figure 555-1-4 Chain Reaction

555-1.4.3 FUEL

555-1.4.3.1 Solid Fuels. The most obvious solid fuels are wood, rubber, paper and cloth. These are found aboard ship as insulation, canvas, dunnage, packing, electrical cabling, wiping rags and mattresses.

555-1.4.3.1.1 Pyrolysis. Before solid fuel will burn, it must be changed to the vapor state. In a fire situation, this change usually results from the initial application of heat. The process is known as pyrolysis, which is generally

defined as chemical decomposition by the action of heat. The decomposition causes a change from the solid state to the vapor state (see Figure 555-1-5). If the vapor mixes sufficiently with air and is heated to a high enough temperature, combustion results.

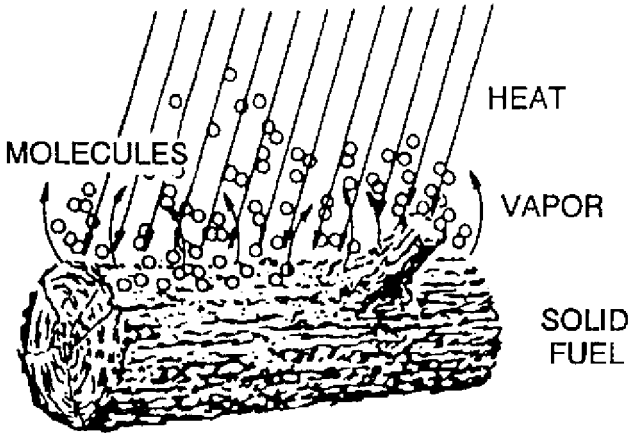

Figure 555-1-5 Pyrolysis

555-1.4.3.1.2 Burning Rate. The burning rate of a solid fuel depends on its configuration. Solid fuels in the form of dust or shavings will burn faster than bulky materials (that is, small wood chips will burn faster than a solid wood beam). Finely divided fuels have a much larger surface area exposed to the heat. Therefore, heat is absorbed much faster, and vaporization is more rapid. More vapor is available for ignition, so it burns with greater intensity and the fuel is quickly consumed. On the other hand, a bulky fuel will burn longer than a finely divided fuel. Burning rate is measured in kilowatts (kW). One kW is approximately 0.95 BTU/min. A small waste paper basket fire peaks around 10 kW.

555-1.4.3.2 Liquid Fuels. The flammable liquids most commonly found aboard ship are JP-5, Navy Distillate (F-76), gasoline (MOGAS), JP-8, lubricating oil, hydraulic fluid and oil base paints and their solvents. **NSTM Chapter 670** provides a list of approved MOGAS uses. JP-8 is found in fuel tanks of Marine Corps ground vehicles.

555-1.4.3.2.1 Vaporization. Flammable liquids release vapor in much the same way as solid fuels. The rate of vapor release is greater for liquids than solids, since liquids have loosely packed molecules. In addition, liquids can release vapor over a wide temperature range. (See Figure 555-1-6). Heating increases the rate of vapor release.

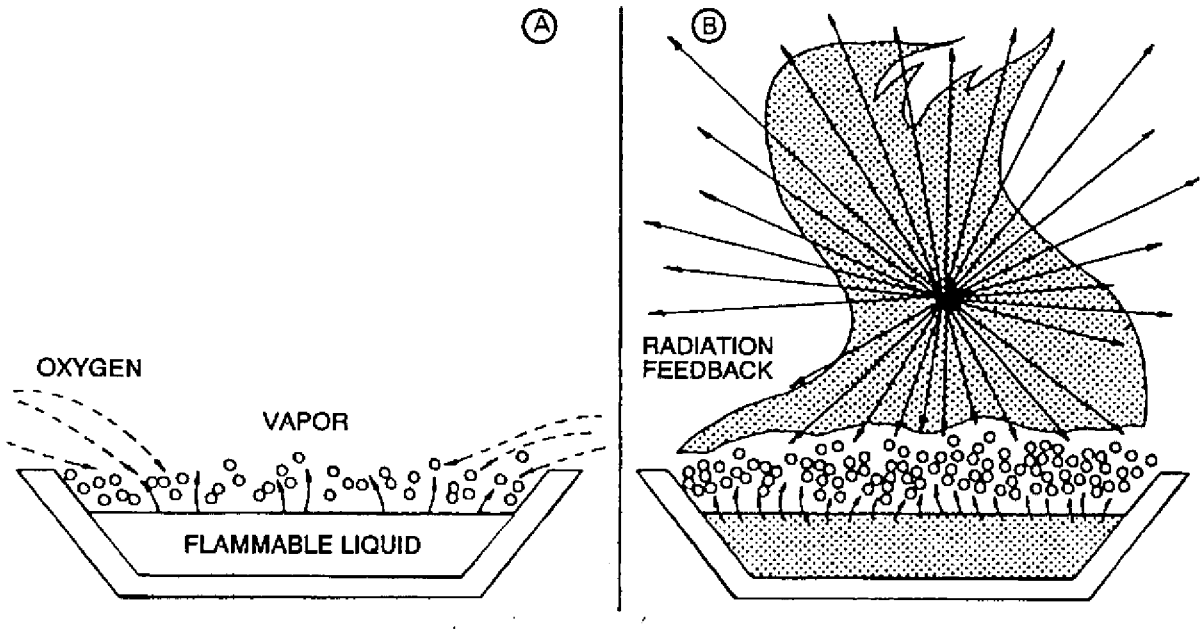

NOTE: A – VAPOR FROM HEATED FUEL RISES, MIXES WITH AIR AND BURNS. IT PRODUCES ENOUGH HEAT TO RELEASE MORE VAPOR AND TO DRAW IN AIR TO BURN THAT VAPOR.

B – AS MORE VAPOR BURNS, FLAME PRODUCTION INCREASES. MORE HEAT IS PRODUCED, MORE VAPOR RELEASED, MORE AIR DRAWN INTO THE FLAMES AND MORE VAPOR BURNS.

Figure 555-1-6 Vaporization

555-1.4.3.2.2 Flashpoint. The flashpoint is the lowest temperature at which a liquid gives off sufficient vapor to form an ignitable mixture. An ignitable mixture is a mixture composed of vapor and air that is capable of being ignited by an ignition source. Gasoline has a flashpoint of -45°F (-43°C). This makes gasoline a continuous fire hazard; it produces flammable vapor at normal temperatures. (See Table 555-1-2). The flashpoints (temperatures) of liquids are determined in controlled tests described in **NSTM Chapter 541** . For a discussion of the classification of flammable liquids see **NSTM Chapter 670** .

555-1.4.3.2.3 Burning Characteristics. Pound-for-pound, flammable liquids produce about 2.5 times more heat than wood. This heat is liberated 3 to 10 times faster from liquid than from wood. These ratios illustrate quite clearly why flammable liquid vapors burn with such intensity. When flammable liquids spill, they expose a very large surface area, release a great amount of vapor, and produce great amounts of heat when ignited. This is one reason why flammable liquid-spill fires burn so violently.

555-1.4.3.3 Flammable Gases. Flammable gases found on board a ship include acetylene, MAPP gas, propane and hydrogen. See paragraph 555-8.7 for flammable gas fire procedures.

555-1.4.3.3.1 Burning Characteristics. Flammable gases are already in the vapor state. Only the proper ratio with oxygen and sufficient heat are needed for ignition. Most gases, like flammable liquids, produce a visible flame; they do not smolder. Hydrogen burns with a flame that is often invisible in normal light, unless there are other materials present in the flames.

555-1.4.3.3.2 Radiation Feedback. Radiation feedback is not necessary to vaporize the gas; however, some radiation feedback is still essential to the burning process, to provide continuous reignition of the gas.

555-1.4.3.4 Explosive Range (Flammable Range). A flammable gas or the flammable vapor of a liquid has to mix with air in the proper proportion to make an ignitable air-vapor mixture. The smallest percentage of gas (or vapor) that will make an ignitable mixture with air is called its lower explosive limit (LEL). If there is less gas (or vapor) than the LEL in the mixture, it is too lean to burn. The greatest percentage of a gas (or vapor) in an ignitable mixture is called its upper explosive limit (UEL). If a mixture contains more gas (or vapor) than the UEL, it is too rich to burn. The range between the lower and upper explosive limits is called the explosive range of the gas (or vapor).

555-1.4.3.4.1 Explosive Limits. Table 555-1-2 gives the LEL, UEL and flashpoint for a number of substances. It shows that a mixture of 1.4 percent to 7.6 percent gasoline vapor in air will ignite. A mixture of 9 percent gasoline vapor and 91 percent air will not ignite, because it is too rich (above the UEL). A large volume of air must intermix with a small amount of gasoline vapor to form an ignitable mixture. Certain devices can detect the presence of potentially hazardous concentrations of flammable gases. Such devices include the combustible gas indicator, see **NSTM Chapter 079, Volume 2** .

Table 555-1-2 PROPERTIES OF SELECTED FLAMMABLE LIQUIDS AND GASES

Material	Flashpoint	LEL	UEL	Ignition Temp	Ref. Source
Acetylene	gas[1]	2.5%	100%	581°F (305°C)	NFPA 325M
Carbon Monoxide	gas[1]	12.5%	74.0%	1128°F (609°C)	NFPA 325M
Cooking Oil	610°F[6]	__[3]	__[3]	740°F-830°F[6] (393°C-443°C)	NFPA 325M
Ethyl Alcohol	55°F (13°C)	3.3%	19.0%	685°F (363°C)	NFPA 325M
Fuel, Navy Distillate (F-76) (MIL-F-16884)	140°F (60°C)	__[2]	__[2]	450°F (232°C)	NSTM 541
Gasoline (100 Oct)	-45°F (-43°C)	1.4%	7.6%	853°F (456°C)	NFPA 325M
Hydraulic Fluid MIL-H-17672:					
2075 T-H	315°F (157°C)	__[3]	__[3]	__	Mat. Safety Data Sheet
2110 T-H	325°F (163°C)	__[3]	__[3]	685°F (363°C)	Mat. Safety Data Sheet
2135 T-H	340°F (171°C)	__[3]	__[3]	__	Mat. Safety Data Sheet
Hydrogen	gas[1]	4.0%	75.0%	932°F (500°C)	NFPA 325M
JP-4 (MIL-T-5624)	0°F (-18°C) (NSTM 542)	1.3%	8.0%	464°F (240°C)	NFPA 325M
JP-5 (MIL-T-5624)	140°F (60°C) (NSTM 542)	0.6%	4.6%	475°F (246°C)	NFPA 325M
JP-8	100°F (38°C) (minimum)	0.7%	5.0%	444°F (229°C)	MIL-T-83133C +Exxon Data Sheet
Lubricating Oil:					
2190 TEP (MIL-L-17331)	400°F (205°C)	0.9%	7.0%	665°F (352°C)[4]	Mat. Safety Data Sheet

Table 555-1-2 PROPERTIES OF SELECTED FLAMMABLE LIQUIDS AND GASES - Continued

Material	Flashpoint	LEL	UEL	Ignition Temp	Ref. Source
9250 (MIL-L-9000)	380°F-390°F (193°C-199°C)	—[3]	—[3]	—	Mat. Safety Data Sheet
Methane[5]	gas[1]	5.0%	15.0%	999°F (537°C)	NFPA 325M
Methyl Alcohol	52°F(11°C)	6.7%	36%	725°F(385°C)	NFPA 325M
Methyl Ethyl Ketone	16°F (-9°C)	1.4%	11.4%	759°F (404°C)	NFPA 325M
Propane	gas[1]	2.1%	9.5%	842°F (450°C)	NFPA 325M
Torpedo Otto Fuel II	265°F (129°C)	—[3]	—[3]	—	MIL-O-82672A

[1] Flammable gases do not list flashpoints since they can be ignited at any temperature.
[2] Explosive limits of Fuel, Navy Distillate (F-76) are similar to those of JP-5.
[3] Data for LEL and UEL not available.
[4] Ignition temperature ref. source is ″Flammability of Aircraft Hydraulic Fluids″ prepared by Coordinating Research Council, Inc., dated September 1985.
[5] Methane exists in and around the CHT and VCHT Systems.
[6] Cooking oil flashpoint and ignition temperatures vary with origin of oil, brand, age, and contaminants.

555-1.4.3.4.2 Safety Guidelines. It is important to realize that certain ranges of vapor-air mixtures can be ignited, and to use caution when working with flammable liquids. The explosive ranges of specific types of flammable liquids are published in National Fire Protection Association (NFPA) **Fire Protection Handbook** , and the **Fire Protection Guide for Hazardous Materials** published by the National Fire Protection Association and DOD 6050.5-CD, **Hazardous Material Control and Management** .

555-1.4.4 OXYGEN. The oxygen side of the fire triangle refers to the oxygen content of the surrounding air. Ordinarily, a minimum concentration of 15 percent oxygen in the air is needed to support flaming combustion. However, smoldering combustion can take place in an atmosphere with as little as 3 percent oxygen. Air normally contains about 21 percent oxygen, 78 percent nitrogen and 1 percent other gases, principally argon.

555-1.4.4.1 Oxidizing Materials. An oxidizing material is a material that releases oxygen when it is heated and may react readily with other materials. Such substances include the hypochlorites, chlorates, perchlorates, nitrates, chromates, oxides and peroxides. All carry their own supply of oxygen, enough to support combustion. Oxygen is released when the materials break down, as in a fire. For this reason, burning materials with their own oxidizers cannot be extinguished. Instead, large amounts of water are needed to cool surroundings while permitting a controlled burnout. Oxidizers are hazardous materials and must be stored in approved locations. For information on oxidizing materials including approved stowage see **NSTM Chapter 670** .

555-1.4.5 HEAT. Heat is the third side of the fire triangle. When sufficient heat, fuel and oxygen are available, the triangle is complete and fire can exist. Heat of ignition initiates the chemical reaction that is called combustion. Heat can come from the flame of a match, a hot surface (see Table 555-1-3), sparks caused by ferrous metals striking together, heat generated by friction, lightning, an oxyacetylene torch cutting or welding metal, an electrical short circuit, or an electrical arc between conductor and motor casing. See Appendix B, Glossary, for definition of hot surfaces for flammable liquid piping. Sufficient heat may also be produced internally, within the fuel, by a chemical reaction called spontaneous heating.

Table 555-1-3 TYPICAL UNLAGGED HOT SURFACE TEMPERATURES

1200 psi Superheated Steam	950° F (510° C)
1200 psi De-Superheated Steam	600° F (320° C)
600 psi Superheated Steam	850° F (460° C)
600 psi De-Superheated Steam	500° F (260° C)
Diesel Engine	1000° F (540° C)
Diesel Exhaust	700° F (370° C)
Gas Turbine Exhaust	1200° F (650° C)
Nuclear Steam Plant	<500° F (<260° C)

555-1.4.5.1 Spontaneous Heating. Spontaneous heating is the process whereby a material increases in temperature without drawing heat from its surroundings. Spontaneous heating of a material to its ignition temperature results in spontaneous ignition. Spontaneous heating to dangerous temperatures is governed by the rate of heat generation, material configuration, air supply and insulating properties of the surroundings. In order for spontaneous ignition to occur, sufficient air must be available to permit oxidation but not so much air that the heat is dissipated by convection as rapidly as it is formed. Spontaneous ignition occurs typically in materials that are tightly packed and saturated in greases, paints, animal and vegetable oil or fats. An oily rag which might spontaneously heat in the bottom of a waste paper basket will not if laid out in the open where air movement can remove the heat. Aboard ship, spontaneous ignition has occurred in materials immediately removed from clothes dryers and stored in laundry bags. Current dryers are fitted with a cool down cycle that minimizes the potential for fires occurring in laundry bags.

555-1.4.5.2 Ignition Temperature. The ignition temperature of a substance (solid, liquid or gas) is the lowest temperature at which sustained combustion will occur without the application of a spark or flame. Ignition temperatures vary among substances. For a given substance, the ignition temperature also varies with physical form, surface area and other factors. The ignition temperatures for common combustible materials lie between 300°F (150°C) and 1,000°F (540°C).

555-1.4.5.3 Spark Ignition. Finely atomized fuel vapors and gases can be ignited by a hot spark that provides the minimum ignition energy (MIE) for that fuel. The hot spark can come from many sources, such as grinding operations or operating an uncovered electrical switch. For hydrocarbon vapor in air, the minimum ignition energy is approximately 0.2 millijoules (mJ), which is much less than the spark energy from electric power systems. Low flashpoint flammable liquids, such as gasoline (MOGAS), vaporize from a standing pool at normal room temperatures and always present a spark ignition hazard. However, the high flashpoint flammable liquids normally found on U.S. Navy ships, such as diesel fuel, lube oil and hydraulic fluid, must be finely atomized by a spraying leak to be ignited by a spark. This is because the minimum ignition energy (MIE) increases rapidly with the vapor particle size. A course (large particle) spray of a high flashpoint fuel will not ignite with a small spark but will ignite with a steam pipe or diesel exhaust duct that is hotter than the fuel's ignition temperature because the fuel is first vaporized by the hot surface, see Table 555-1-2 and Table 555-1-3. Since most electric spark sources are enclosed, it is very unlikely that a high flashpoint fuel spray will be ignited by a spark.

555-1.5 HAZARDOUS PRODUCTS OF COMBUSTION

555-1.5.1 GENERAL. Fire produces flames, heat, gases and smoke. Each of these combustion products can cause serious injuries or death.

555-1.5.2 FLAMES. Direct contact with flames can result in total or partial disabling skin burns and serious damage to respiratory tract. To prevent skin burns during a fire attack, crew members should maintain a safe distance from the fire unless they are properly protected and equipped for the attack. Protective clothing should be worn when combating an advanced fire. Respiratory tract damage can be prevented by wearing breathing apparatus. Firefighting personnel must remember that breathing apparatus does not protect the body from the extreme heat of a fire.

555-1.5.3 HEAT. Fire can generate compartment temperatures in excess of 2000°F (1093°C) particularly when a compartment has flashed over. Temperatures above 150°F (66°C) are hazardous to humans. Studies have shown that a skin surface temperature as low as 160°F (71°C) will result in second degree burns if contact is maintained for 60 seconds. The dangerous effects of heat range from minor injury to death. Direct exposure to heated air may cause dehydration, heat exhaustion, burns and blockage of the respiratory track by fluids. Heat also causes an increased heart rate. A firefighter exposed to excessive heat over an extended period of time could develop hyperthermia, a dangerously high fever that can damage nerve centers. See Table 555-1-7 for more information.

555-1.5.4 GASES. The particular gases produced by a fire depend mainly on the fuel. The most common hazardous gases are carbon monoxide (CO), the product of incomplete combustion and carbon dioxide (CO_2), the product of complete combustion. In a smoldering fire, the ratio of carbon monoxide to carbon dioxide is usually greater than in a well-ventilated, free-burning fire.

555-1.5.4.1 Carbon Monoxide. CO is the most abundant combustion product and is, therefore, the major threat in most fire atmospheres. Exposure to CO results in an oxygen deficiency in the brain and body. Exposure to a 1.3 percent concentration of CO will cause unconsciousness in two or three breaths, and death in a few minutes. See Table 555-1-4. CO is a flammable gas (see Table 555-1-5).

Table 555-1-4 HUMAN TOLERANCE TO CARBON MONOXIDE

PPM CO	% CO	Incapacitation	Death
1500	0.15	30 minutes	2 hours
4000	0.4	15 minutes	1 hour
6000	0.6	5 minutes	10 minutes
20,000	2	15-30 seconds	2 minutes
60,000	6	Immediate (One breath)	< 1 minute

555-1.5.4.2 Carbon Dioxide. CO_2 works on the respiratory system. Above normal CO_2 concentrations in the air reduces the amount of oxygen that is absorbed in the lungs. The body responds with rapid and deep breathing (a signal that the respiratory system is not receiving sufficient oxygen).

555-1.5.4.2.1 Oxygen Reduction. When the oxygen content of air drops from its normal level of 21 percent to about 16 percent, human muscular control is reduced. At 10 percent to 14 percent oxygen in air, judgment is impaired and fatigue sets in. Unconsciousness usually results from oxygen concentrations below 10 percent. During periods of exertion, such as firefighting operations, the body requires more oxygen and increased demands may result in oxygen deficiency symptoms at normal oxygen levels.

555-1.5.4.3 Other Fire Gases. Several other gases generated by a fire are of equal concern to firefighters. Toxic hydrocarbon vapors are produced by fuels. Hydrogen chloride (HCl) is produced when polyvinyl chloride (PVC) electric cable jacketing is burned. Hydrogen cyanide (HCN) is produced when chilled water piping insulation is

burned. Fluorocarbon refrigerants, such as R-12, R-114, and HFC 134a, are nonflammable and nonexplosive, but exposure to flames or hot surfaces will cause these compounds to generate hydrogen chloride (acid gas), hydrogen fluoride (acid gas) and other poisonous gases.

555-1.5.5 SMOKE. Smoke is a visible product of fire that adds to the problem of breathing. It is made up of carbon and other unburned substances in the form of suspended particles. It also carries the vapors of water, acids and other chemicals, which can be poisonous or irritating when inhaled.

555-1.5.5.1 Smoke greatly reduces visibility in and above the fire area. It irritates the eyes, nose, throat and lungs. Either breathing a low concentration for an extended period of time or a heavy concentration for a short time can cause great discomfort to a firefighter.

555-1.5.5.2 Firefighters who do not wear breathing apparatus in the fire area will eventually have to retreat to fresh air or be overcome by smoke and toxic gases.

555-1.6 CLASSIFICATION OF FIRES

555-1.6.1 GENERAL. There are four classifications of fire: class A, class B, class C, and class D. The different classifications are briefly described in the following paragraphs.

555-1.6.2 CLASS A FIRES. Class A fires involve wood and wood products, cloth, textiles and fibrous materials, paper and paper products. Class A fires are extinguished with water in straight or fog pattern. If the fire is deep-seated, aqueous film forming foam (AFFF) is more effective than sea water and can be used as a wetting agent to rapidly penetrate and extinguish the fire.

555-1.6.3 CLASS B FIRES. Class B fires involve flammable liquids such as gasoline, diesel fuel (F-76), jet fuels, hydraulic fluid and lube oil. These fires are normally extinguished with AFFF, Halon 1211, Halon 1301 or potassium bicarbonate (PKP). Class B fires also involve flammable gases which should never be extinguished unless there is reasonable certainty that the flow of gas can be secured. Securing the fuel source is the single most important step in controlling a gas fire. See paragraphs 555-1.4.3.3 and 555-8.6.

555-1.6.4 CLASS C FIRES. Class C fires are energized electrical fires that are attacked at prescribed distances using nonconductive agents such as CO_2 , Halon 1211 or water spray. The most effective tactic is to de-energize and handle the fire as a class A fire. When fires are not deep seated, clean agents that pose no cleanup problem such as Halon 1211 or CO_2 are preferred.

555-1.6.5 CLASS D FIRES. Class D fires involve combustible metals such as magnesium and titanium. Water in quantity, using fog patterns, is the recommended agent. When water is applied to burning class D materials, there may be small explosions. The firefighter should apply water from a safe distance or from behind shelter. Metal fires on board ship are commonly associated with aircraft wheel structures. For further information refer to NAVAIR-00-80-R-14, **NATOPS, U.S. Navy Aircraft Firefighting and Rescue Manual** .

555-1.7 BURNING CHARACTERISTICS OF PROPELLANTS AND EXPLOSIVES

555-1.7.1 COMPOSITION OF PROPELLANTS AND EXPLOSIVES. Propellants and explosives typically are composed of energetic materials that combine both a fuel and an oxidizer. Once ignited, these materials cannot

be extinguished. Burning will continue until the material is consumed. Cooling streams of AFFF or seawater should be used to control the burn and cool the surrounding area. From a damage control standpoint, efforts should be directed at jettisoning or washing the weapons over the side. In the presence of flammable liquids, burning explosives or propellants will pose a continuous source of ignition. See OP-4, **Ammunition Afloat** , for further information on weapons fires. Firefighting procedures for nuclear weapons are addressed in OPNAVINST 3440.15. Anti-ship weapons threats are addressed in paragraph 555-9.4. Firefighting procedures for the MK-50 torpedo are addressed in section 555-8.9.

555-1.7.2 FIGHTING FLAMMABLE LIQUID AND WEAPONS FIRES. Firefighting procedures involving weapons and flammable liquid fires that occur on flight and hangar decks are addressed in NAVAIR 00-80-R-14, **NATOPS, U.S. Navy Aircraft Firefighting and Rescue Manual** . Flammable liquid fires should be fought with AFFF. After the fire is extinguished, the area should continue to be cooled with AFFF, as required. Combined use of AFFF hoselines and seawater hoselines should be avoided because seawater will dilute and degrade the AFFF film. Seawater may be used for weapons cooling, but only after the fire is extinguished.

555-1.7.3 HYPERGOLIC MIXTURES. Hypergolic mixtures are used as propellants for certain rockets and missiles. Hypergolic fuels consist of two components that, when brought into contact with each other, will ignite without application of some external aid (such as a spark), and will continue to burn as long as the two components remain in contact with each other. The health hazards include chemical burns, poisoning, and frostbite. In accidents involving these materials, personnel shall use full respirator protection and protective clothing. Fires involving these materials can best be handled by diluting the fuel and oxidizer with large quantities of water. For further information see NAVSEA S9000-AB-GTP-010, **Shipboard Safety and Damage Control for Stowage of Hypergolic Fueled Missiles and Fuel Air Explosive (FAE) Bombs** and NAVAIR 00-80-R-14 **NATOPS, U.S. Navy Aircraft Firefighting and Rescue Manual** .

555-1.7.4 TORPEDO OTTO FUEL. Otto Fuel II is a stable liquid monopropellant used in the propulsion of the Mk 46, Mk 48, Mk 55, Mk 56, and Mk 60 torpedoes. Otto Fuel II is composed of a nitrate ester in solution with a desensitizing agent and a stabilizer. It is a bright red, free flowing, oily liquid that is heavier than water. It is insoluble in water. Detailed safety, handling, and cleanup instructions for Otto fuel are contained in NAVSEA S6340-AA-MMA-010, **Otto II Fuel Safety, Storage, and Handling Instructions** .

555-1.7.4.1 Because Otto fuel is a monopropellant which contains its own oxidizer, combustion cannot be smothered. The most efficient method of extinguishing an Otto Fuel II fire is to cool the propellant below its flashpoint of 265°F (129°C). This is best accomplished by the use of water fog or AFFF. Water and AFFF are both lighter than Otto Fuel II and will form a layer on the fuel surface and absorb the heat given off by the fire. For very small Otto fuel fires, flames may be swept off the surface and extinguished with carbon dioxide fire extinguishers.

555-1.7.4.2 Otto Fuel II liquid and vapor is extremely toxic. Otto fuel toxic effects may occur from inhalation of Otto Fuel II vapors, inhalation of combustion by-products, absorption from direct skin contact, or ingestion. The nitrate esters in the Otto fuel are known for their acute effects, including nausea, turgidity (swelling), blood pressure changes, headaches, and dyspnea (difficult breathing).

WARNING

Personnel shall not be exposed to Otto Fuel II vapor concentrations in excess of 0.2 ppm (1.3 mg/m^3). Injury or death of personnel could result.

WARNING

The smoke from burning Otto fuel must be considered as hazardous and toxic as Otto fuel fumes.

555-1.7.4.3 For Otto Fuel II fires below decks, personnel without self-contained breathing protection should not enter smoky areas. Personnel without full protective clothing should not enter spaces containing Otto Fuel II.

555-1.7.4.4 Fire party personnel should take extreme care not to expose skin surfaces. Fire party personnel, clothing, and equipment exposed to Otto Fuel II should be considered contaminated until tested. Once the fire is extinguished, Otto Fuel II spill cleanup and decontamination should be conducted in accordance with NAVSEA S6340-AA-MMA-010, **Otto II Fuel Safety, Storage, and Handling Instructions** .

555-1.8 HEAT TRANSFER

555-1.8.1 GENERAL. Heat from a fire is transferred by one or more of three methods: conduction, radiation, and convection.

555-1.8.2 CONDUCTION. Conduction is the transfer of heat through a body or from one body to another by direct physical contact. For example, on a hot stove, heat is conducted through the pot to its contents. Wood is ordinarily a poor conductor of heat, but metals are good conductors. Since most ships are constructed of metal, heat transfer by conduction is a potential hazard. Fire can move from one fire zone to another, one deck to another, and one compartment to another by heat conduction.

555-1.8.2.1 In many cases the skillful application of water, typically applied using fog patterns to rapidly coat and recoat surfaces with a film of water will retard or halt the transmission of heat by conduction. Fog patterns coat surfaces more efficiently than solid streams, reducing run off and the effect on ship stability.

555-1.8.3 RADIATION. Heat radiation is the transfer of heat from a source across an intervening space; no material substance is involved. The heat travels outward from the fire in the same manner as light; that is, in straight lines. When it contacts a body, it is absorbed, reflected or transmitted. Absorbed heat increases the temperature of the absorbing body. For example, radiant heat that is absorbed by an overhead will increase the temperature of that overhead, perhaps enough to ignite its paint.

555-1.8.3.1 Heat radiates in all directions unless it is blocked. Radiant heat extends fire by heating combustible substances in its path, causing them to produce vapors, and then igniting the vapor. Radiant heat flux is the measure of radiant energy (heat) flow per unit area, and is normally expressed in kW/m^2 (kilowatts per square meter).

555-1.8.3.2 Within a ship, radiant heat will raise the temperature of combustible materials near the fire and, depending on the ship's design, at quite some distance from the fire. Ship fires can spread as a result of radiating bulkheads and decks. Intense radiated heat can make an approach to the fire extremely difficult. For this reason, protective clothing should be worn by firefighters.

555-1.8.4 CONVECTION. Convection is the transfer of heat through the motion of circulating gases or liquids. Heat is transferred by convection through the motion of smoke, hot air and heated gases produced by a fire.

555-1.8.4.1 When heat is confined (as within a ship), convected heat moves in predictable patterns. The fire produces lighter-than-air gases that rise toward high parts of the ship. Heated air, which is lighter than cooler air, also rises. As these heated combustion products rise, cool air takes their place; the cool air is heated in turn and then rises to the highest point it can reach.

555-1.8.4.2 Hot smoke originating at a fire on a low deck will travel horizontally along passageways, and then upward by way of ladder and hatch openings, heating flammable materials in its path. To prevent fire spread, the heat, smoke and gases should be released into the atmosphere. However, the structural design of a ship makes it difficult to rapidly cut openings through decks, bulkheads or the ship's hull for ventilation. It is imperative that the fire be confined to the smallest possible area. Doors and hatchways should be kept closed when they are not in use. If a fire is discovered, attempts should be made to close off all openings to the fire area until firefighting personnel and equipment can be brought into position to fight the fire.

555-1.9 COMPARTMENT FIRE DYNAMICS

555-1.9.1 FIRE GROWTH IN A COMPARTMENT. During its life, a compartment fire normally experiences four different stages: growth, flashover, fully developed fire, and decay (see Figure 555-1-7).

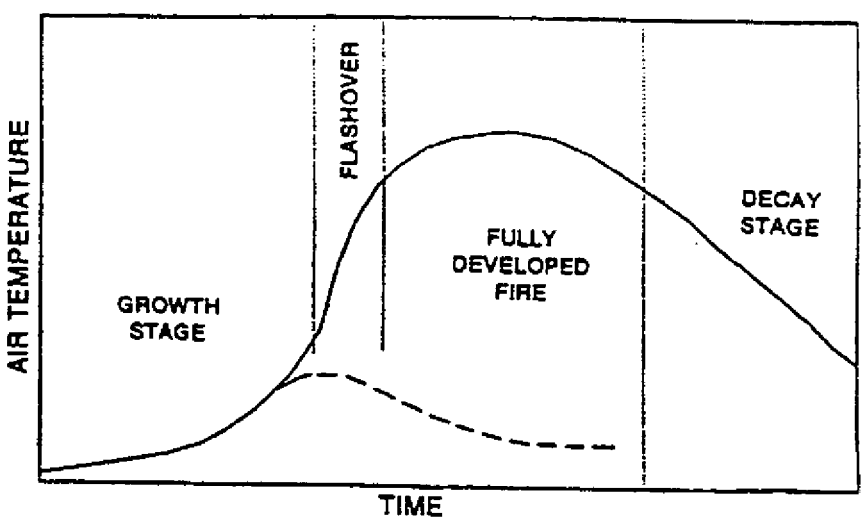

Figure 555-1-7 Stages of Compartment Fire Growth

555-1.9.1.1 Growth Stage. In the growth or pre-flashover stage the average space temperature is low and the fire is localized in the vicinity of its origin. High local temperatures exist in and around the burning material(s), and smoke from the fire forms a hot upper layer in the space (see Figure 555-1-8).

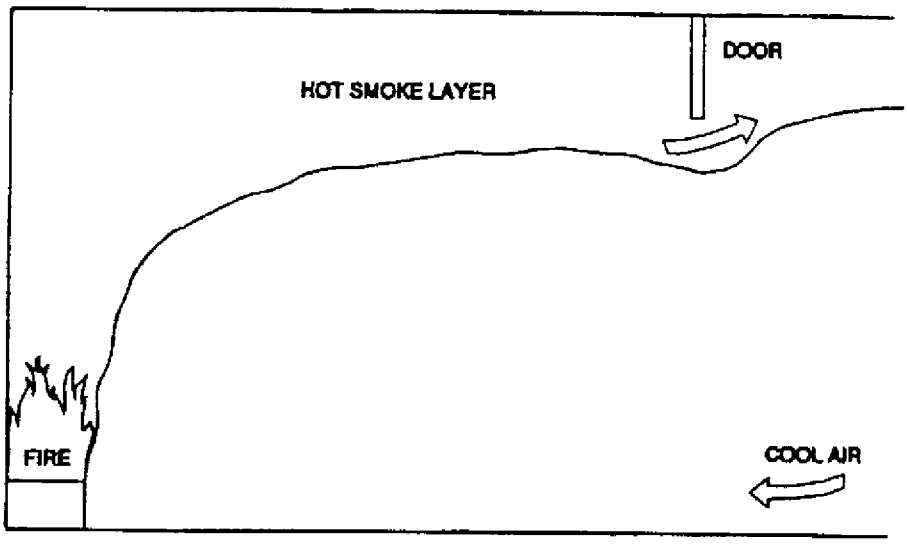

Figure 555-1-8 Growth Stage-Compartment Fire

555-1.9.1.1.1 Rollover. Rollover is the formation of a flame front of burning gases across the overhead of a space. Rollover takes place in the growth stage when unburned combustible gases from the fire mix with fresh air in the overhead and burn at some distance from the seat of the fire. Rollover differs from flashover in that only the gases are burning and not all the contents of the space.

555-1.9.1.2 Flashover Stage. Flashover is the period of transition from the growth stage to the fully developed fire stage. Flashover occurs in a short period of time and may be considered as an event, as ignition is an event. It normally occurs when the upper smoke layer temperature reaches 1100°F (600°C) and the radiant heat flux at the deck reaches 20 kilowatts per square meter (kW/m^2). The most obvious characteristic of flashover is the sudden spread of flame to all remaining combustibles in the fire space. Survival of personnel who have not escaped from the compartment prior to flashover is unlikely.

555-1.9.1.3 Fully Developed Fire Stage. In the fully developed or post-flashover fire stage, all combustibles in the space have reached their ignition temperature and are burning. During this stage, the burning rate in the compartment is normally limited by the amount of oxygen available in the air for combustion. Flames may emerge from any opening. Unburnt fuel in the smoke may burn as it meets fresh air in adjacent compartments. Structural damage to exposed steel normally occurs as it is heated to extreme temperatures. A fully developed fire will normally be inaccessible by hose teams and require extinguishment by indirect attack (see paragraph 555-7.2.4). A compartment can reach the fully developed fire stage very quickly in machinery space flammable liquid fires or enemy weapon induced fires.

555-1.9.1.4 Decay Stage. Eventually, the fire consumes all available fuel, at which time combustion slows down (decays) and the fire goes out.

555-1.9.2 THRESHOLDS. Significant exposure thresholds are provided in Table 555-1-5, Table 555-1-6, Table 555-1-7, and Table 555-1-8.

Table 555-1-5 IGNITION THRESHOLDS (PILOTLESS IGNITION WITHIN 30 SECONDS)

Material	Hot Air (Oven Effect)	Hot Metal Contact (Frying Pan Effect)	Radiant Heat Flux
Paper	450°F (230°C)	480°F (250°C)	20 kW/m^2
Cloth	480°F (250°C)	570°F (300°C)	35 kW/m^2
Wood	570°F (300°C)	660°F (350°C)	40 kW/m^2
Cables	700°F (370°C)	840°F (450°C)	60 kW/m^2

Table 555-1-6 IGNITION OF PAPER VIA RADIANT HEAT

Radiant Heat Flux	Time to Ignition
20 kW/m^2	25 sec
25 kW/m^2	14 sec
35 kW/m^2	8 sec
50 kW/m^2	3.5 sec
75 kW/m^2	2.5 sec

Table 555-1-7 HUMAN TOLERANCE TO HEAT

Hot Air Exposure	
200°F (90°C)	Incapacitation 35 minutes, death 60 minutes
300°F (150°C)	Incapacitation 5 minutes, death 30 minutes
380°F (190°C)	Immediate incapacitation, death 15 minutes
400°F (200°C)	Irreversible respiratory tract damage
650°F (340°C)	Death
Radiant Heat Exposure	
1 kW/m^2	Noon sun radiation at sea level on clear sunny day
5 kW/m^2	Pain threshold for exposed skin
10 kW/m^2	Immediate blistering

Table 555-1-8 THERMAL EFFECTS ON ELECTRONICS

120°F (50°C)	Computers develop Faults
300°F (150°C)	Permanent Computer Damage
480°F (250°C)	Data Transmission Cables Fail

555-1.9.3 BACKDRAFT. If a fire self-extinguishes because of a lack of oxygen, as can occur in a sealed air-tight compartment, fuel vapors may still be formed from a flammable liquid which is above its flashpoint, or from pyrolysis of a solid material. If fresh air is then introduced and the fuel-vapor-rich air is still above its ignition temperature, the three elements of the fire triangle are again present and the mixture can ignite explosively. This is known as backdraft. A backdraft is an unusual occurrence.

555-1.10 FIRE SPREAD

555-1.10.1 GENERAL. If a fire is attacked early and efficiently, it can be confined to the area in which it started. If it is allowed to burn unchecked, it can generate great amounts of heat that will travel away from the fire area, igniting additional fires wherever fuel and oxygen are available. Steel bulkheads and decks and other fire barriers can delay but not prevent transfer of heat.

555-1.10.2 FIRE SPREAD BETWEEN COMPARTMENTS BY CONDUCTION. When a compartment is fully involved in fire, e.g. post-flashover, fire is most quickly spread to other compartments through openings such as doorways, vent ducts, and open pipeways and wireways. It will also spread to adjacent compartments by heat conduction through the bulkheads. Fires normally spread faster vertically to the space above than to adjacent horizontal spaces. Figure 555-1-9, Figure 555-1-10, Figure 555-1-11, and Figure 555-1-12 provide typical temperatures, radiant heat flux, and times for material ignition by conduction through steel bulkheads from a fully developed (post-flashover) fire. The compartments tested were 8 foot x 8 foot x 8 foot steel cubes with bare metal surfaces. The typical values provided will vary significantly due to factors such as bulkhead insulation, compartment dimensions, ventilation, specific material characteristics, and water application and cooling.

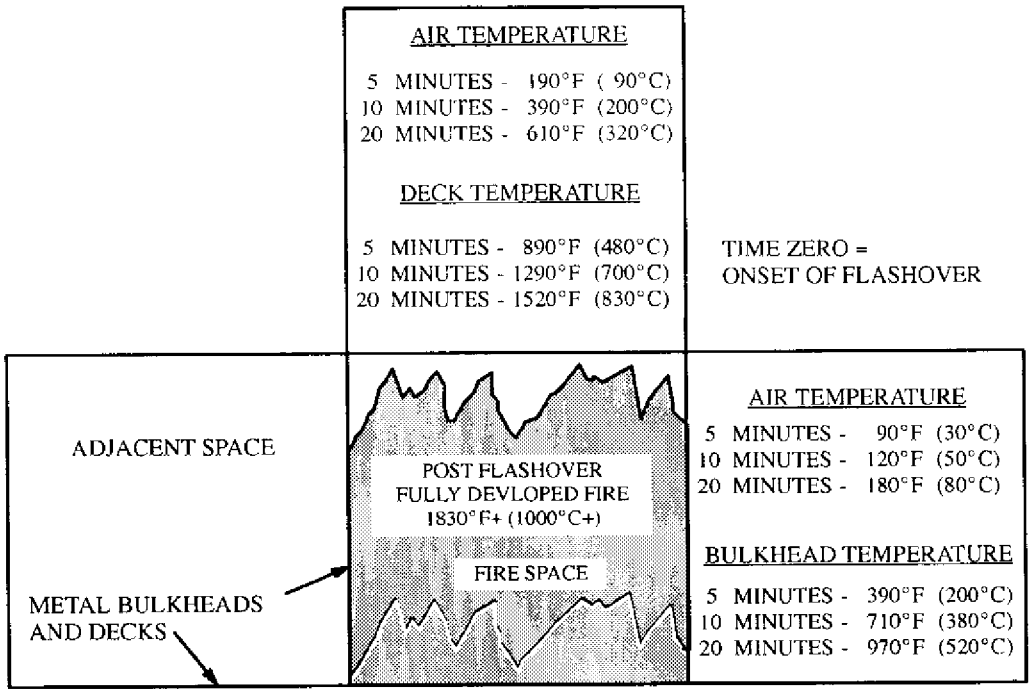

Figure 555-1-9 Fire Spread Through Metal Boundaries - Temperature vs. Time

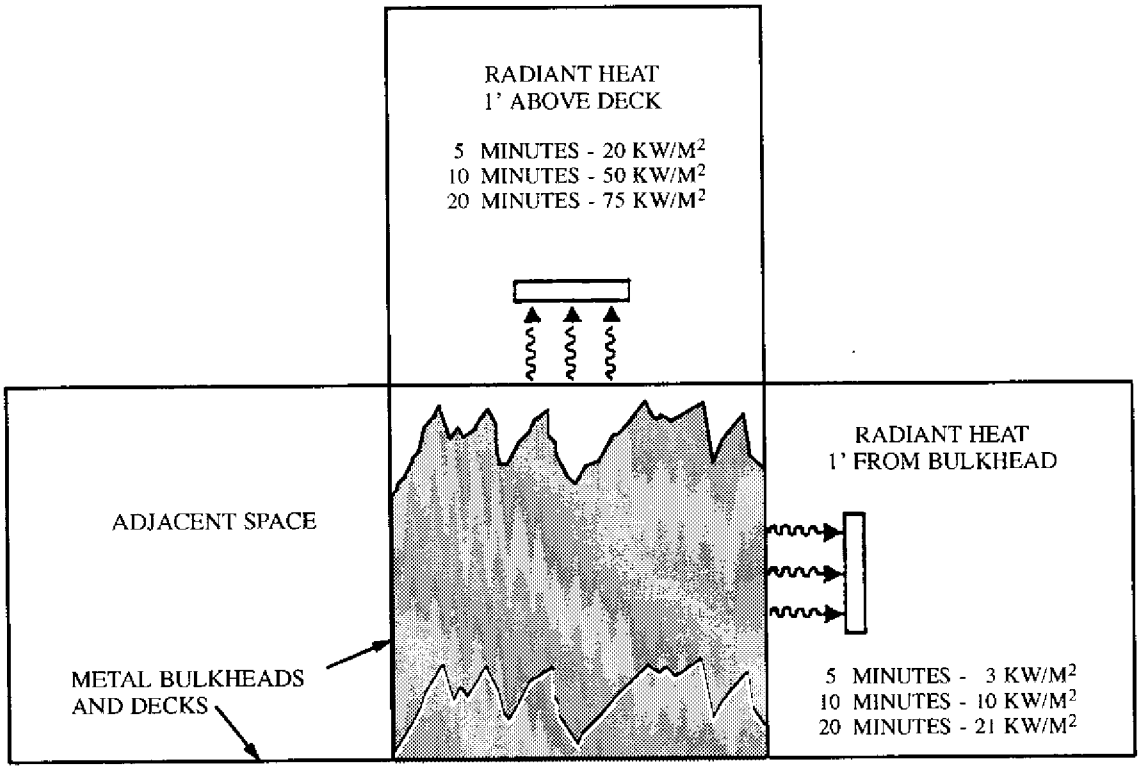

Figure 555-1-10 Fire Spread Through Metal Boundaries - Radiant Heat vs. Time

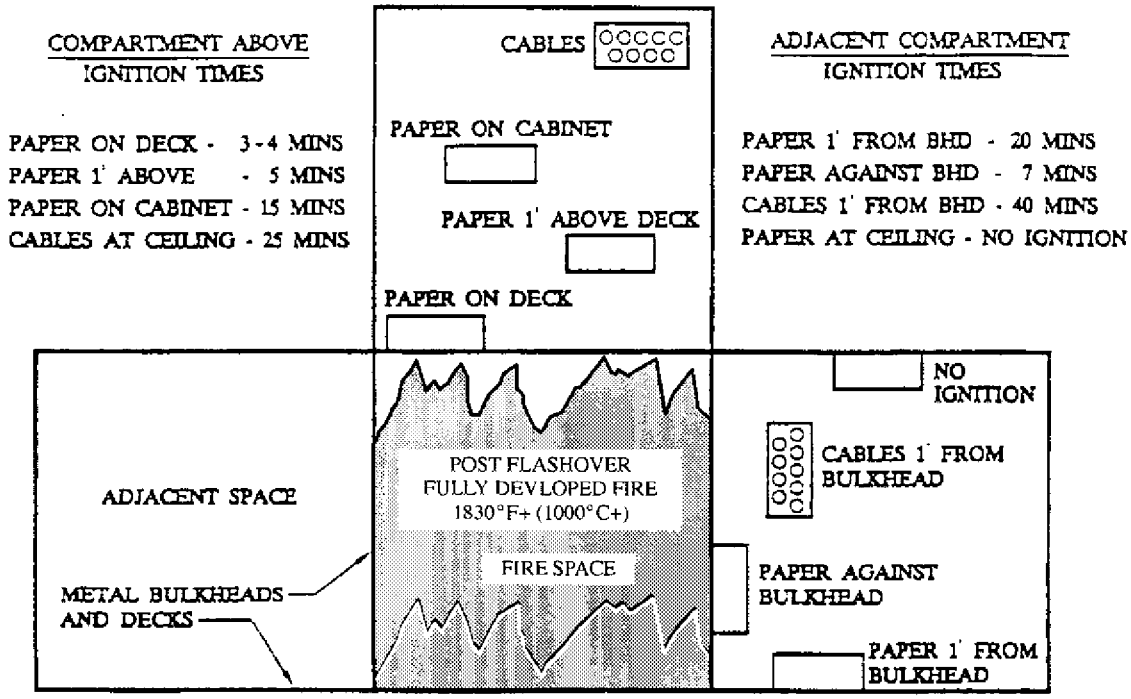

Figure 555-1-11 Fire Spread Through Metal Boundaries - Ignition Threshold

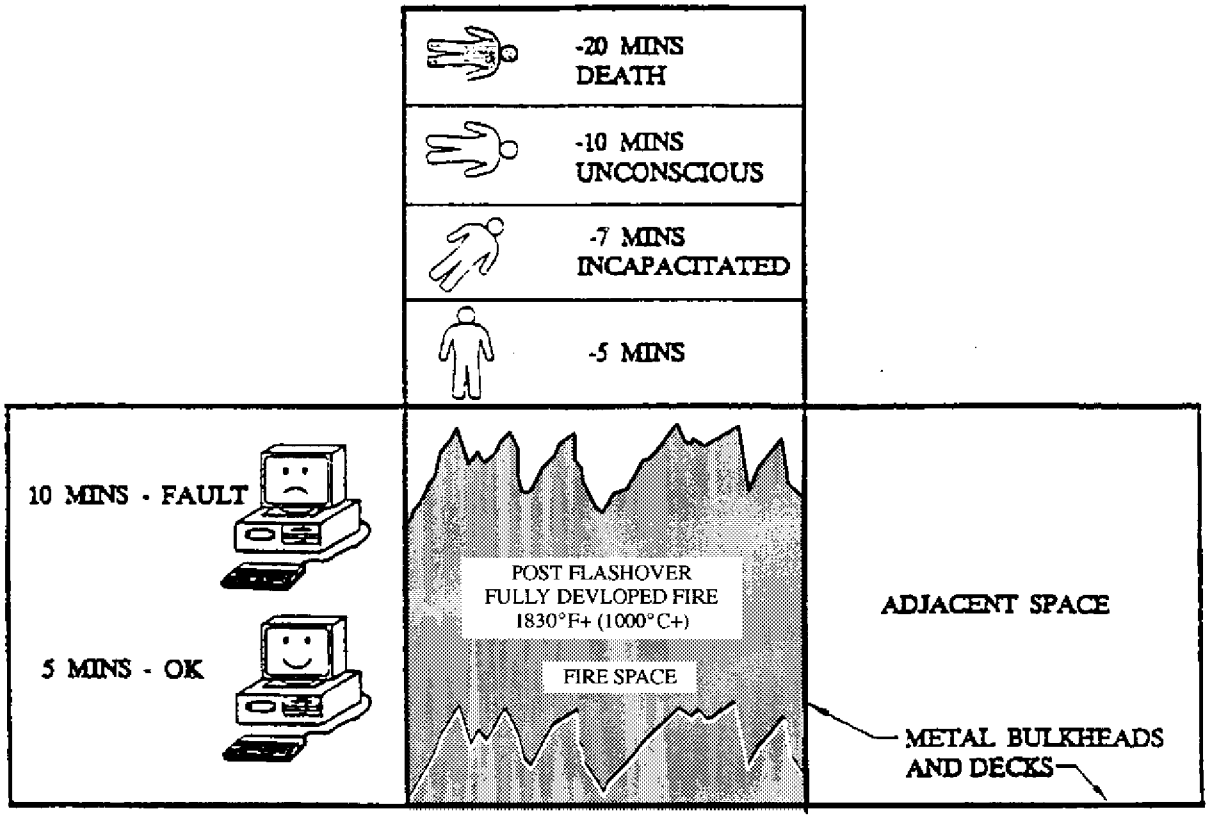

Figure 555-1-12 Fire Spread Through Metal Boundaries - Heat Tolerance

555-1.10.3 FIRE SPREAD IN ELECTRICAL CABLEWAYS. The spread of fire in electrical cableways and the water from firefighting efforts can interrupt power, lighting and communications which serve vital spaces and functions. Even though most older cables in a cable run are armored, fire experience has shown armor does not deter fire in a cable. The metal braid is not sufficiently heavy to act as a heat shield to reduce cable temperature, nor is it sufficiently gastight to prevent the burning of outgassing products emitted from the insulation. If fire is allowed to extend to grouped cables, a deepseated fire that feeds on electrical insulation and generates toxic, dense black smoke can occur. New cables currently in use are in accordance with MIL-C-24643 and are designed to reduce the amount of smoke generated.

555-1.10.4 DIFFICULTIES ASSOCIATED WITH FIRES IN ELECTRICAL CABLEWAYS. Burning cables that are grouped together reinforce combustion by trapping combustion heat. In some instances, cable trays are suspended from passageway overheads with one tray above the other, further limiting the ability of firefighters to direct hose streams to the source of the fire. Passageways tend to act as ovens trapping heat from a cableway fire and reinforcing combustion. Because cable fires generate so much smoke, a significant delay can be expected in locating the seat of the fire. Fires involving grouped cables have occurred directly below the weather deck and caused significant damage. Only by venting the fire through the deck were these fires quickly controlled and extinguished.

555-1.10.5 PREVENTION OF FIRE SPREAD IN ELECTRICAL CABLEWAYS. A preventative measure against the spread of fire and smoke is to form permanent fire stops in electrical cable wireways at nonairtight and nonfumetight bulkheads. This is accomplished by packing MIL-I-3064 sealing compound in the openings

between cables and the bulkhead collar. These sealing compounds may be procured through the Federal Supply System using the following National Stock Numbers indicated.

a. 10 lb can, 9G 5980-00-295-7658

b. 1 lb can, 9G 5970-00-295-9298

555-1.11 THEORY OF EXTINGUISHMENT

555-1.11.1 METHODS. A fire can be extinguished by removing the fuel, removing the oxygen, or removing the heat (cooling). Another method of extinguishment is flame inhibition.

555-1.11.2 REMOVING THE FUEL. One way to remove the fuel from the fire is to physically drag it away. It is often possible to move nearby fuels away from the immediate vicinity of a fire, so that the fire does not extend to these fuels.

555-1.11.2.1 Sometimes the supply of liquid or gaseous fuel can be cut off from a fire. When a fire is being fed by a fuel line, it can be extinguished by closing the proper valve. If a pump is supplying liquid fuel to a fire in the engine room, the pump can be shutdown to remove the fuel source and extinguish the fire.

555-1.11.2.2 Fire in a defective fuel oil burner can be controlled and extinguished by closing the supply valve. Fire involving acetylene or propane can often be extinguished by shutting the valve on the cylinder.

555-1.11.3 REMOVING THE OXYGEN. A fire can be extinguished by removing its oxygen or by reducing the oxygen level in the air to below 15 percent. Many extinguishing agents (for example, CO_2 and foam) extinguish fire with a smothering action that deprives the fire of oxygen.

555-1.11.3.1 Extinguishment by oxygen removal is difficult, but not impossible, in an open area with gaseous smothering agents like CO_2 . CO_2 would be blown away from an open deck area, especially if the ship is under way. On the other hand, fire in a galley trash container can be snuffed out by placing a cover tightly over the container, blocking the flow of air to the fire. As the fire consumes the oxygen in the container, it becomes starved for oxygen and is extinguished.

555-1.11.3.2 Aqueous Film Forming Foam (AFFF) systems are installed in hangar decks, flight decks and engineering spaces. AFFF acts by establishing a film over flammable liquids to exclude oxygen and by preventing the formation of flammable vapors. AFFF also cools the liquid surface to reduce vapor formation.

555-1.11.3.3 To extinguish a fire in an enclosed space, such as a flammable liquid storeroom, the space can be flooded with CO_2 total flooding systems. When the CO_2 enters the space and mixes with the atmosphere, the percentage of oxygen in the atmosphere is reduced below 15 percent, and extinguishment results. For extinguishment to be successful, the space shall be completely sealed to keep fresh air out.

555-1.11.4 REMOVING HEAT. Water, when applied in fog or straight stream, is the most effective means of removing heat from ordinary combustible materials such as wood, paper and cardboard. Cooling with water can ultimately stop the release of combustible vapors and gases associated with the burning of solid fuels.

555-1.11.4.1 Water Extinguishing. When fire is attacked with a hose line, one gallon per minute (gpm) of water could theoretically absorb heat at approximately 10,000 BTU per minute (180 kW) when fully vaporized. This water will vaporize to steam and expand approximately 1,700:1, greatly reducing oxygen in an enclosed space.

555-1.11.5 BREAKING THE COMBUSTION CHAIN REACTION. Flaming combustion occurs in a complex series of chemical chain reactions. Once the chain reaction sequence is broken, a fire can be extinguished rapidly. The extinguishing agents commonly used to attack the chain reaction and inhibit combustion are dry chemicals and Halons. These chemical agents directly attack the molecular structure of compounds formed during the chain reaction sequence. The breakdown of these compounds adversely affects the flame-producing capability of the fire. The attack is extremely rapid.

555-1.11.5.1 It should be understood that these agents do not cool a smoldering fire or flammable liquid whose container has been heated above the liquid's ignition temperature. In these cases, the extinguishing agent must be maintained on the fire until the fuel has cooled. A cooling medium such as water or AFFF should be used to cool the smoldering embers or the sides of the container.

555-1.12 FIREFIGHTING AGENTS

555-1.12.1 PRIMARY AGENTS. There are many materials that may be used as firefighting agents. The primary agents discussed in the following paragraphs are the most extensively used aboard naval ships. The primary firefighting agents are:

a. Water

b. Aqueous Film Forming Foam (AFFF)

c. Carbon Dioxide (CO_2)

d. Halon

e. Steam

f. Potassium Bicarbonate (PKP)

g. Aqueous Potassium Carbonate (APC)

555-1.12.2 WATER. Water is a cooling agent and on board ship the sea provides an inexhaustible supply. If the surface temperature of a fire can be lowered below the fuel's ignition temperature, the fire will be extinguished. Water is most efficient when it absorbs enough heat to raise its temperature to 212°F (100°C). At this temperature, the seawater will absorb still more heat until it changes to steam. The steam carries away the heat which cools the surface temperature.

555-1.12.3 STRAIGHT STREAM. Water in the form of straight stream (also called solid stream) is used to reach into smoke-filled spaces or areas at a distance from the firefighter. When a straight stream is needed as an extinguishing agent, it should be directed into the seat of the fire. For maximum cooling, the water must come in direct contact with the burning material. A straight stream is best used to break up and penetrate materials.

555-1.12.3.1 Water Volume. Keeping in mind the constant problem of excess water disposal, high volume water discharge should be used as little as possible, especially in situations below decks. For Navy All Purpose nozzles, the solid stream discharges greater flow than fog patterns. The 1-1/2 inch and 2-1/2 inch vari-nozzles provide constant flow at all pattern settings.

WARNING

Do not use Navy All-Purpose nozzle fog applicator or straight stream water pattern on an energized electric source to avoid shock hazards. Maintain a minimum standoff distance of four feet when applying water fog to an energized electric source.

555-1.12.3.2 Electrical Hazard. Straight stream water is the greatest conductor of electricity as opposed to the fog spray pattern and straight stream should not be used on electrical fires.

555-1.12.3.3 Effect on Class B Fires. A straight stream of water is ineffective for extinguishing class B fires and can cause a violent fire reaction if the water stream atomizes the fuel into the air causing a greatly increased surface area. However, a straight stream can be used to wash combustibles over the side in a weather deck fire. When washing combustibles over the side, it is imperative that the burning material is washed directly into the sea and not onto another deck or overhang.

555-1.12.3.4 Heat Transfer Characteristics. Straight streams do not have good heat transfer characteristics and do not absorb nearly as much heat as fog patterns.

555-1.12.4 WATER FOG. Water in the form of water fog is very effective for firefighting purposes. However, the fog must be applied directly to the area to be cooled if its benefits are to be realized. Additionally, water fog can provide protection to firefighters from both convective and radiant heat.

555-1.12.4.1 Electrical Hazard. See paragraph 555-8.2 for guidance on the electrical hazards of water.

555-1.12.4.2 Use on Class A Fires. For use of water on class A Fires, see Section 555-7.1.

555-1.12.4.3 Use on Flammable Liquids. Because of the cooling qualities of the finely divided water particles, water fog can be used successfully on fires involving fuels with flashpoints above 140°F, such as Navy Distillate Fuel (F-76). Extinguishment occurs by cooling the flammable liquid below its flashpoint. Water fog should be used on flammable liquids only when AFFF is not available. Danger of reflash exists until all of the fuel is cooled down below its flashpoint.

555-1.12.4.3.1 When fighting a class B fire with water, apply a continuous narrow angle fog pattern to the leading edge of the flames and sweep the water from side to side in a continuous motion, pushing the flames back across the fuel surface. Narrow angle fog concentrates the water at the fuel surface which increases its effectiveness. The wide angle fog pattern does not provide sufficient water concentration to extinguish a class B fire.

555-1.12.5 AQUEOUS FILM FORMING FOAM. AFFF is composed of synthetically produced materials similar to liquid detergents. These film forming agents are capable of forming water solution films on the surface of flammable liquids. For shipboard use, the Navy uses six percent AFFF (six parts AFFF concentrate mixed with 94 parts water) using Type 6 concentrate per military specification MIL-F-24385. Nonmilitary specification commercial AFFF should not be used.

555-1.12.5.1 Description. AFFF concentrate is a clear to slightly amber colored liquid. The AFFF solution of water and concentrate possesses a low viscosity and is capable of quickly spreading over a surface. AFFF concentrate is nontoxic and biodegradable in diluted form. AFFF concentrate may be stored indefinitely without degradation in characteristics. The concentrate will freeze if exposed to temperatures below 32°F. If the frozen concentrate is thawed out it can be reused, but storage in heated areas is recommended.

555-1.12.5.2 Firefighting Advantages. AFFF, when proportioned with water provides three fire extinguishing advantages. First, an aqueous film is formed on the surface of the fuel which prevents the escape of the fuel vapors. Second, the layer of foam effectively excludes oxygen from the fuel surface. Third, the water content of the foam provides a cooling effect.

555-1.12.5.3 Use of Aqueous Film Forming Foam. The principle use of foam is to extinguish burning flammable or combustible liquid spill fires (class B). AFFF shall be used to re-enter all compartment fires involving flammable liquids. AFFF has excellent penetrating characteristics and is superior to water in extinguishing class A fires.

555-1.12.5.4 Electrical Hazard. The electrical hazard of AFFF is the same as that for water alone. See paragraph 555-8.2.

555-1.12.5.5 Environmental Restrictions. AFFF is designated as an environmental pollutant. Except when used during a fire, it shall be disposed of in accordance with OPNAVINST 5100.19, **Navy Occupational Safety and Health (NAVOSH) Program Manual for Forces Afloat, Appendix B3-C** . AFFF should not be discharged into any system which, when pierside, may feed into an ashore sewer treatment plant. AFFF may kill the bacteria that aids in sewer treatment and disrupt plant operation.

555-1.12.6 CARBON DIOXIDE. A method of extinguishing fires by smothering is the use of the inert gas CO_2 . CO_2 is about 1.5 times heavier than air. This makes CO_2 a suitable extinguishing agent because it tends to settle and blanket the fire.

555-1.12.6.1 General Characteristics. CO_2 is a dry, noncorrosive gas, which is inert when in contact with most substances and will not leave a residue and damage machinery or electrical equipment. In both, the gaseous state and the finely divided solid (snow) state, it is a nonconductor of electricity regardless of voltage, and can be safely used in fighting fires that would present the hazard of electric shock.

555-1.12.6.2 Method of Extinguishing. CO_2 extinguishes the fire by diluting and displacing its oxygen supply. If gaseous CO_2 is directed into a fire so that sufficient oxygen to support combustion is no longer available, the flames will die out. Depending on the fuel, this action will take place when the 21 percent oxygen content, normally present in air, is diluted with CO_2 below 15 percent oxygen. Some ordinary combustible class A fires require that the oxygen content be reduced to less than 6 percent in order to extinguish glowing combustion (smoldering fire). CO_2 has limited cooling capabilities, and may not cool the fuel below its ignition temperature and is more likely than other extinguishing agents to allow reflash. Therefore, the firefighter must remember to

standby with additional backup extinguishers. The temperature of the burning substance and its surroundings must be lowered below its ignition temperature if the fire is to remain extinguished.

555-1.12.6.3 Use on Materials Producing Oxygen. CO_2 is not an effective extinguishing agent for fires in materials that produce their own oxygen supply such as aircraft parachute flares. Fires involving reactive metals, such as magnesium, sodium, potassium, lithium, or titanium cannot be extinguished with CO_2 . Because of the relatively high temperatures involved, these metal fuels decompose CO_2 and continue to burn.

555-1.12.6.4 Personnel Hazards. For information on the personnel hazards presented by carbon dioxide, see paragraph 555-2.8.2.

555-1.12.7 HALON. Halon is a halogenated hydrocarbon, which means that one or more of the hydrogen atoms in each hydrocarbon molecule have been replaced by one or more atoms from the halogen series (fluorine, chlorine, bromine, or iodine). This substitution provides nonflammability and flame extinguishing properties. A Halon numbering system has been developed to provide a description of the various halogenated hydrocarbons. The first digit in the number represents the number of carbon atoms in the molecule; the second digit, the number of fluorine atoms; the third digit, the number of chlorine atoms; the fourth digit, the number of bromine atoms; and the fifth digit, the number of iodine atoms, if any. In this system, terminal zero digits, if any, are not expressed.

555-1.12.7.1 Types of Halon. The two types of Halon used aboard Naval ships are Halon 1301 and 1211. Halon 1301 is the most commonly used type. Halon 1211 is used for twin agent (AFFF/Halon 1211) applications on some flight and hangar deck mobile firefighting apparatus. Portable Halon 1211 20-pound fire extinguishers are also installed in MHC-51 class coastal minesweeping ships and air cushion landing craft (LCAC).

555-1.12.7.1.1 Halon 1301 (known chemically as bromotrifluoromethane) consists of one atom of carbon, three atoms of fluorine, no chlorine atoms, one bromine atom, and no iodine atoms. For shipboard installation, Halon 1301 is superpressurized, with nitrogen, and stored in gas cylinders as a liquid. When released, it vaporizes to a colorless, odorless gas with a density of approximately five times that of air.

555-1.12.7.1.2 Halon 1211 (known chemically as bromochlorodifluoromethane) consists of one atom of carbon, two atoms of fluorine, one atom of chlorine, and one atom of bromine. Halon 1211 is also colorless, and has a sweet smell. Halon 1211 is stored and shipped as a liquid and pressurized with nitrogen gas. Pressurization is necessary since the vapor pressure is too low to convey it properly to the fire area.

555-1.12.7.2 Method of Extinguishing. Halon (1211 and 1301) chemically inhibits the flame front.

555-1.12.7.3 Use of Halon 1301. Halon 1301 is installed and used in fixed flooding systems for extinguishing flammable liquid fires.

555-1.12.7.4 Use of Halon 1211. Halon 1211 is not used in total flooding systems. Its lower volatility, plus a high liquid density, permit the agent to be sprayed as a liquid and therefore propelled into the fire zone to a greater extent than is possible with other gaseous agents. Halon 1211 is used in twin agent systems installed on mobile firefighting apparatus on carrier type ships. For flight and hangar deck firefighting procedures refer to NAVAIR 00-80-R-14, **NATOPS U.S. Navy Aircraft Firefighting and Rescue Manual** .

555-1.12.7.5 Halon Decomposition. Halon decomposes upon contact with flames or hot surfaces above 900°F (482°C). Decomposition products are principally hydrogen fluoride and hydrogen bromide, which have a sharp irritating odor even at low concentrations.

555-1.12.7.6 Personnel Hazards. The short discharge time of Halon 1301 (10 seconds maximum) keeps the thermal decomposition products well below lethal concentrations. The real hazard lies not in the by-products of the Halon, but rather in the products of combustion from the fire. Combustion products such as CO, combined with the oxygen depletion, heat and smoke pose a greater hazard to personnel. Personnel should not remain in a space where Halon 1301 has been released to extinguish a fire unless a breathing apparatus is worn. If Halon 1301 should inadvertently be released into a space where no fire exists, personnel can be exposed to 5 to 7 percent concentration of Halon 1301 for a period up to 10 minutes (depending upon the individual) without danger to health. Halon 1301 can be considered a nontoxic and nonsuffocating extinguishing agent in the normal 5 to 7 percent concentrations; however, spaces should be evacuated on Halon system discharge.

555-1.12.7.6.1 Human exposures to both Halon 1301 and to Halon 1211 have shown that Halon 1301 concentrations up to about 7 percent by volume, and Halon 1211 concentrations of 2 to 3 percent by volume, have little noticeable effect on personnel. At Halon 1301 concentrations between 7 and 10 percent and Halon 1211 concentrations between 3 and 4 percent, personnel experienced dizziness and tingling of the extremities, indicative of mild anesthesia. At Halon 1301 concentrations above 10 percent and Halon 1211 concentrations above 4 percent the dizziness becomes pronounced, the subjects feel as if they will lose consciousness (although none have), and physical and mental dexterity is reduced. The discharge of Halon 1211 to extinguish a fire may create a hazard to personnel from the natural Halon 1211 itself and from the products of decomposition that result from the exposure of the agent to the fire or other hot surfaces. Halon 1211 is colorless and has a faintly sweet odor (prolonged exposure to concentrations greater than 4 percent carries with it the possible risk of unconsciousness and even death.) Although Halon 1211 vapor has a low toxicity, its decomposition products can be hazardous. When using Halon 1211 in unventilated or confined spaces, operators and others should avoid breathing the gases, and should only use the agent needed to accomplish extinguishment. No significant adverse health effects have been reported from the use of Halon 1301 or 1211 as a fire extinguishing agent since their introduction into the marketplace 30 years ago.

NOTE

In flammable gas cylinder storerooms, 20 percent Halon 1301 is required to extinguish a fire. Therefore, if the system is activated, personnel shall leave the space immediately.

555-1.12.7.6.2 Direct contact with vaporizing Halon 1301 and Halon 1211 liquid has a strong chilling effect on objects and can cause frostbite and burns to the skin. The liquid phase vaporizes rapidly during discharge and therefore limits this hazard to the immediate vicinity of the nozzle.

555-1.12.7.6.3 High velocity discharge from nozzles is sufficient to move unsecured paper and light objects which could cause personnel injury.

555-1.12.7.6.4 Discharge of a total flooding system can cause noise loud enough to be startling.

555-1.12.7.6.5 In humid atmospheres, reduction in visibility may occur due to condensation of water vapor in the air.

555-1.12.7.7 Ozone Depletion. Halon 1211 and Halon 1301 are severe ozone depleting substances. These agents should be used only against actual fires. Any Halon cylinder which may contain only a partial charge, or is being turned in, shall not be vented off for any reason.

555-1.12.8 STEAM. Steam as an agent smothers a fire by reducing the concentration of oxygen or the gaseous phase of the fuel in the air to the point where the combustion stops. As long as the steam blanket is maintained, it will prevent reignition. Steam smothering systems are installed in boiler casings and catapult troughs.

555-1.12.8.1 Since steam is a vapor when it is applied it does little cooling. Additionally, steam condenses when the supply is shut off. Its volume decreases rapidly and combustible vapors and air rush in to replace it. There is a very good chance that the fire can reflash if it has not been completely extinguished and cooled. Also, steam is hazardous to personnel since it can inflict severe burns.

555-1.12.9 DRY CHEMICAL EXTINGUISHING AGENT, POTASSIUM BICARBONATE. Potassium bicarbonate (PKP) is a dry chemical principally used as a fire extinguishing agent for flammable liquid fires. It is used in portable extinguishers.

555-1.12.9.1 Additives. Various additives are mixed with the PKP base materials to improve their storage, flow, and water repellency characteristics. The most commonly used additives are silicones which coat the particles of PKP to make it free-flowing and resistant to the caking effects of moisture and vibration.

555-1.12.9.2 Method of Extinguishing. When PKP is applied to fire, the dry chemical extinguishes the flame by breaking the combustion chain. PKP does not have cooling capability.

555-1.12.9.2.1 When PKP is applied, an opaque cloud is formed in the combustion areas. This cloud limits the amount of heat that can be radiated back to the heart of the fire. Less fuel vapors are produced due to the reduced radiant heat.

555-1.12.9.2.2 When PKP is applied to the fire, it attacks the chain reaction required to sustain the fire. It is believed that PKP reduces the ability of the molecular fragments to recombine, therefore breaking the chain reaction.

555-1.12.9.3 Use of Potassium Bicarbonate (PKP). PKP is highly effective in extinguishing flammable liquid (class B) fires. Although PKP can be used on electrical (class C) fires, it will leave a residue that may be hard to clean. PKP can also be used extensively in the galley for such items as the hood, ducts and cooking ranges.

555-1.12.9.3.1 The following is a list of limitations for PKP use.

a. Like all other fire extinguishing agents, PKP is not effective on materials that contain their own oxygen.

b. PKP should not be used in electrical controllers or cabinets where relays and delicate electrical contacts are present.

c. PKP is not effective on combustible metals and may cause a violent reaction.

d. Where moisture is present, PKP may combine with it to corrode or stain surfaces on which it settles; when possible it should be removed from the surfaces.

e. PKP does not produce a lasting inert atmosphere above the surface of a flammable liquid; consequently, its use will not result in permanent extinguishment if ignition sources such as hot metal surfaces or persistent electrical arcing are present.

f. PKP is not effective on fires involving ordinary combustibles (class A). However, it can be used to knock down a flaming fire, keeping it under control, until hose lines are advanced to the scene.

555-1.12.9.3.2 Personnel Hazards. The ingredients used in PKP are nontoxic. However, the discharge of large quantities may cause temporary breathing difficulty during and immediately after the discharge and may seriously interfere with visibility.

555-1.12.10 AQUEOUS POTASSIUM CARBONATE. Aqueous potassium carbonate (APC, $K_2 CO_3$) is used on board Naval ships for extinguishing burning cooking oil and grease in deep fat fryers and galley ventilation exhaust ducts. Aqueous potassium carbonate (APC) solution consists of 42.2 percent potassium carbonate ($K_2 CO_3$) and 57.8 percent water. A technique often used in combating liquid grease fires involving unsaturated animal and vegetable oils and fats is the application of alkaline solutions such as APC which, upon contact with the burning surface, generate a soaplike froth that excludes air from the surface of the grease or oil, and the fire is extinguished.

SECTION 2.

FIRE EXTINGUISHING AND RELATED SYSTEMS DESCRIPTION AND OPERATION

555-2.1 WATERTIGHT AND FIRE ZONE BOUNDARIES

555-2.1.1 FUNCTION OF BOUNDARIES. Main transverse watertight bulkheads (and in some ships longitudinal watertight bulkheads), the shell, and the damage control deck (uppermost deck to which watertight bulkheads are carried) constitute the watertight envelope and subdivision which will enable a ship to maintain watertight integrity and survive underwater damage.

555-2.1.2 FIRE ZONE BOUNDARIES. A fire zone boundary is a bulkhead or deck designed to limit the passage of flame and smoke. Fire zone boundaries confine a fire within a zone and provide protected staging areas for fire parties. Fire zones are formed using selected main subdivision bulkheads and portions of decks where the subdivision is stepped. Exceptions are longitudinal bulkheads in tank wells on landing ships. Fire zone boundaries are designated FZ on damage control drawings. The minimum tightness for a fire zone boundary is fume tight.

555-2.1.2.1 Fire Insulation on Fire Zone Boundaries. Recent ship designs (AOE 6, DDG 51, LHD 5, LSD 49, MCM 1, and MHC 51 classes) have fire zone boundaries fitted with a fire insulation on one side that will retard heat transfer from a fire on the insulated side for a minimum of 30 minutes. The single-sided fire insulation system does not retard heat transfer from a fire on the uninsulated side. New ship designs (LPD 17) will have fire zone boundaries fitted with fire insulation on both sides. This dual-sided fire insulation system will be effective for a fire on either side. Specific locations and details are provided in the ship's Damage Control Book.

a. Some ships have additional fire insulation installed on bulkheads and overheads of selected hazardous spaces. The CG 47 class has fire insulation on the fire zone bulkhead and uptake spaces in the aluminum superstructure. LHD 1 through LHD 4 have fire insulation installed on their aluminum deck house structure. LHD 5

through LHD 7 have fire insulation on bulkheads and overheads of selected hazardous spaces. The MCM 1 and MHC 51 classes have fire insulation in the overhead of each machinery space and other selected hazardous spaces.

b. At repair party leader discretion, manning of fire boundaries may be reduced where fire insulation is installed on the fire side. Periodic inspection by an investigator may be adequate. See **NSTM Chapter 635, Thermal, Fire, and Acoustic Insulation** , for more information on fire insulation design criteria.

555-2.2 VENTILATING SYSTEMS

555-2.2.1 VENTILATING BOUNDARIES. The ventilation system consists largely of vent ducts of many sizes, which provide ventilation to various compartments throughout the ship. These vent ducts can also provide the means to spread fires, smoke and toxic gases to these compartments. It is the responsibility of the firefighter to ensure that the spread of the fire, smoke, toxic gases and flooding dangers are guarded against during the time of fire.

555-2.2.1.1 The firefighter accomplishes this task by opening or closing ventilation closures and valves, or by stopping or starting ventilating blowers, as circumstances require. Recirculation systems and air conditioning systems should also be secured to avoid the spread of smoke and fire to surrounding compartments.

555-2.2.2 IDENTIFICATION OF VENTILATING DUCTS. The ventilating system is designed to supply fresh air or cooled air to the various compartments and to remove from these compartments the foul air and toxic gases. The label **SUPPLY** or the label **EXHAUST** is painted on the ventilating blower casing or the adjacent structure, on ventilating closures, and on the operating mechanism. These labels also indicate what compartments are served. Usually there is a supply and exhaust duct in each watertight compartment.

555-2.2.3 MATERIAL CONDITION ZEBRA. When a naval ship is put in material condition **ZEBRA** for battle, most of the ventilating ducts are closed. At the time of fire, it may be advisable to close still others. The supply system, for instance, could be harmful because it might spread fumes to inboard areas. It might spread the fire further by supplying air (oxygen) to smoldering embers or a small fire. The exhaust system likewise might be harmful, in that it could spread a fire if not secured and monitored.

555-2.3 FIREMAIN SYSTEMS, SURFACE SHIPS

555-2.3.1 GENERAL. Firefighters shall have a working knowledge of the firemain piping system, its valves and its outlets. They should know the measures to be taken after battle damage to assure water supply for firefighting. The firemain system is designed for maximum damage resistance with the following survivability features:

a. Multiple, independent pumps

b. Redundant seawater paths

c. Ability to segregate sections

d. Separation of redundant components

e. Resistance to shock

f. Capability for remote operation

555-2.3.1.1 In view of the possibility of damage resulting from battle, the firefighter should know, for each of the various material conditions, the damage control procedures for localizing and offsetting the effects of damage to the firemain. See paragraph 555-7.14.3 for guidance on rigging a jumper around damaged piping.

555-2.3.2 FUNCTION OF THE FIREMAIN SYSTEM. The shipboard firemain system consists of fire pumps, piping consisting of vertical pump risers, longitudinal service mains, cross-connects, service risers, branch lines, and valves through which seawater is pumped to fire hose stations, Aqueous Film Forming Foam (AFFF) proportioners and sprinkler systems. It also supplies water to flushing, emergency drainage, backup seawater service, machinery and electronic cooling systems. The Washdown Countermeasure, Magazine Sprinkler, Weapons Elevators, Missile Water Deluge System, Trash Burner, Flight Deck Weapons Staging Area and Compartment Sprinkling Systems are also supplied by the firemain.

555-2.3.3 TYPES OF FIRE MAINS. The type of firemain installed in a ship is determined by the ship's function and physical characteristics. The following are specific types of firemains.

a. **Single Main System.** The Single Main System extends fore and aft on the damage control deck (see Figure 555-2-1). It is located near the centerline of the ship and extends as far fore and aft as necessary to supply the required services. The single main system provides little battle damage survivability and is not used in most current U. S. Naval surface ships, however the MHC class and small craft such as the PC class use a single main design.

b. **Horizontal Loop System.** The Horizontal Loop System consists of two single mains separated athwartship as far as practicable, extending fore and aft on the damage control deck. The two mains are connected at both ends to form a horizontal loop. Single mains may extend fore or aft of the horizontal loop as necessary for services (see Figure 555-2-2). Athwartship cross-connects are usually provided at each pump riser. Ships such as the FFG class use a horizontal loop design.

c. **Vertical Offset Loop System.** The Vertical Offset Loop consists of two single mains installed fore and aft in an oblique (e.g. angled) plane, separated both vertically and athwartship, connected at the ends to form a loop (see Figure 555-2-3). The lower main is located as low in the ship as practical on one side and the upper main is located on the damage control deck on the opposite side of the ship. Athwartship cross-connects are usually provided at each pump riser. The DDG class uses a vertical offset loop fire main system.

d. **Composite System.** The Composite System consists of two service mains installed on the damage control deck and separated athwartship, and a bypass main normally installed on a lower level near the centerline (see Figure 555-2-4). CVN class ships use a composite fire main system, while some ships such as LHAs and LHDs have the bypass main installed above the Damage Control Deck.

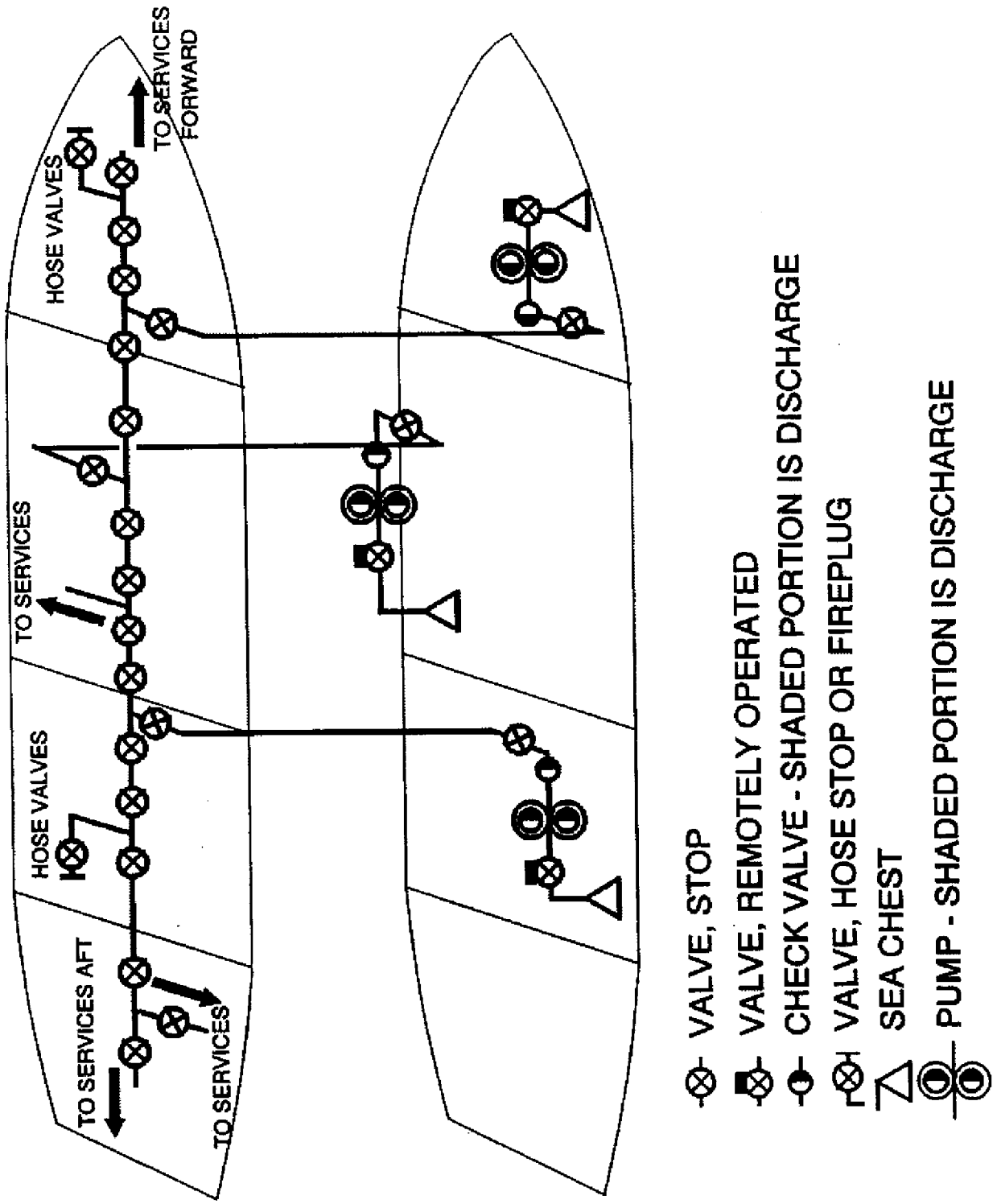

Figure 555-2-1 Typical Single Main Firemain System

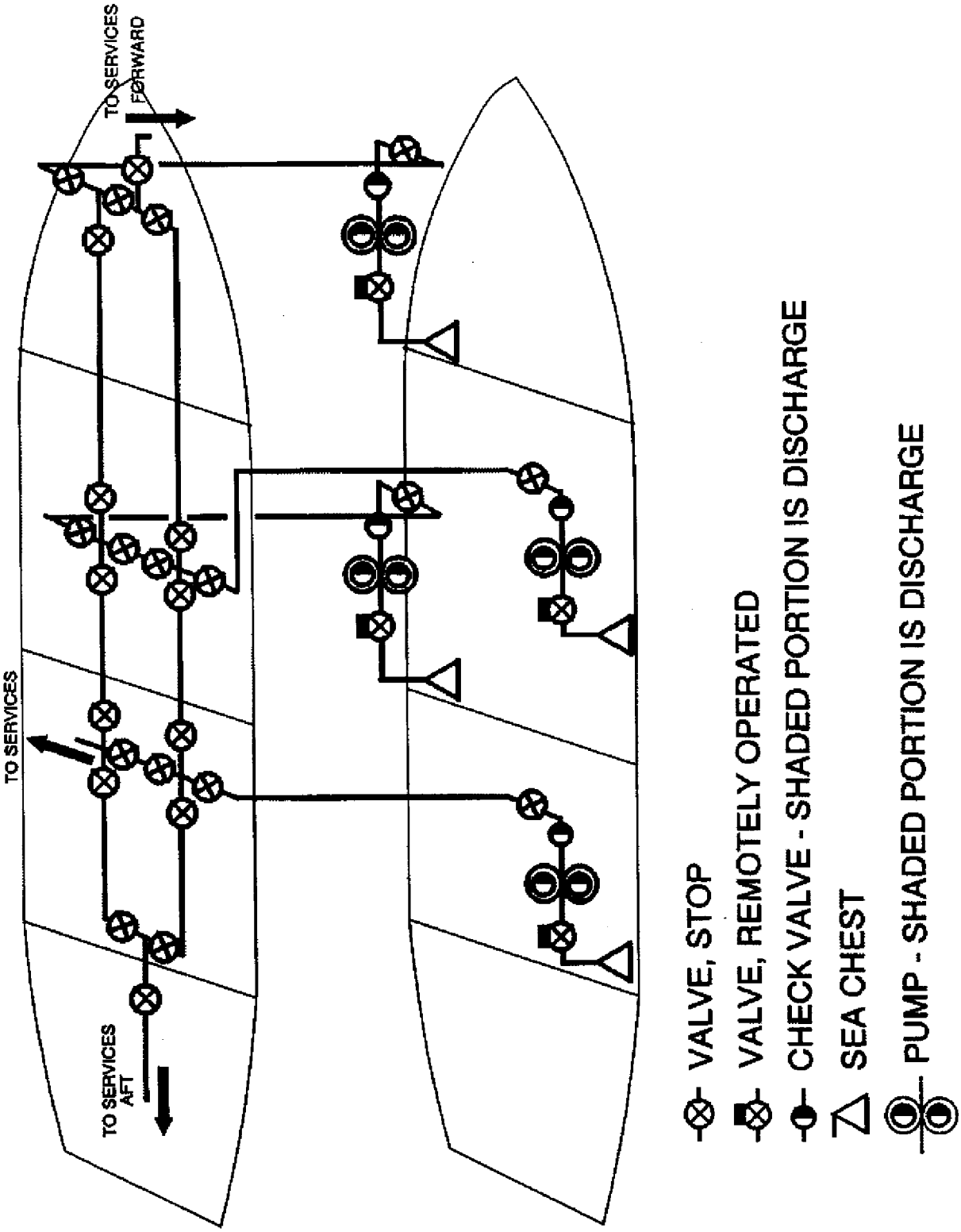

Figure 555-2-2 Typical Horizontal Loop Firemain System

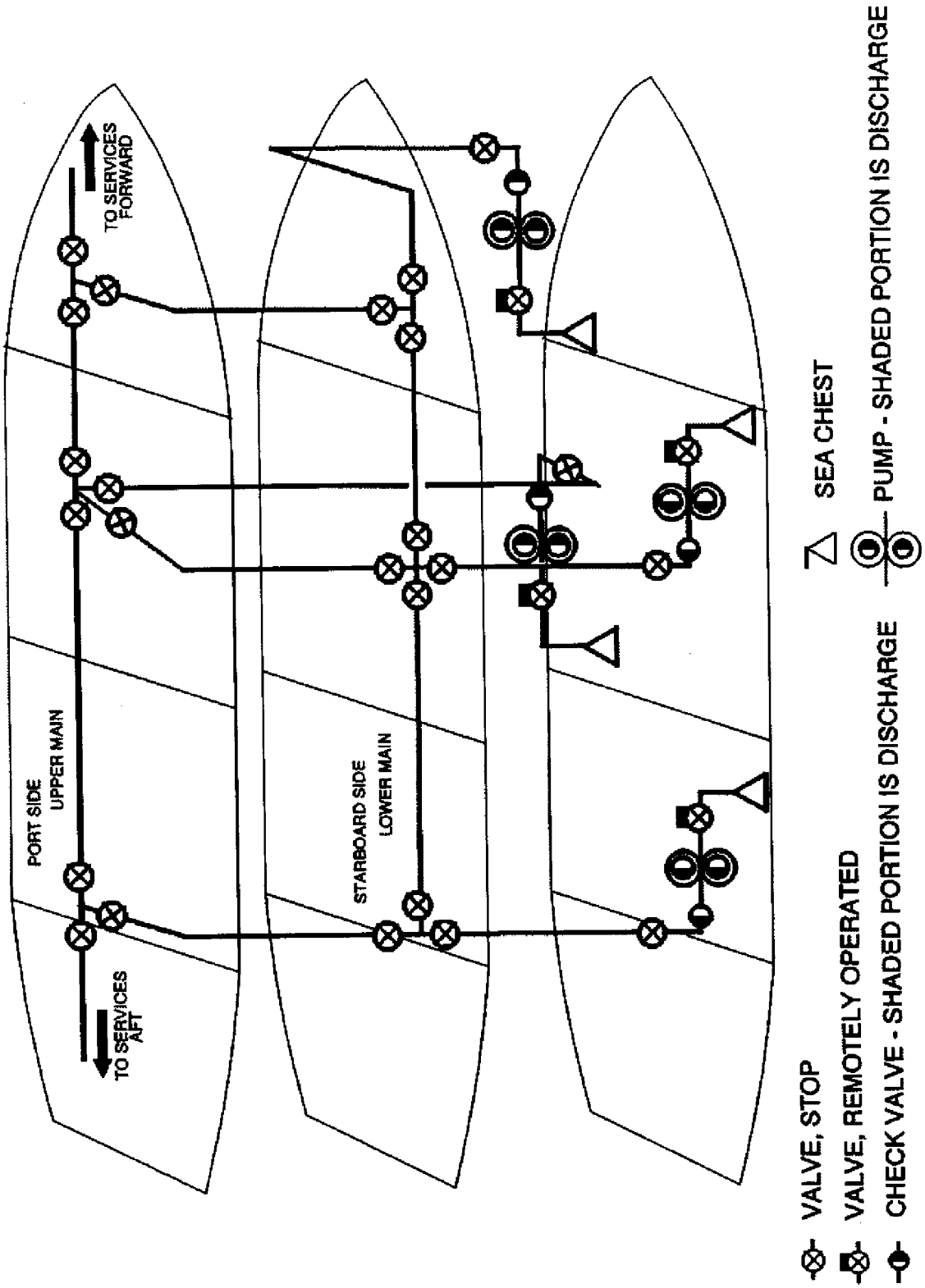

Figure 555-2-3 Typical Vertical Offset Loop Firemain System

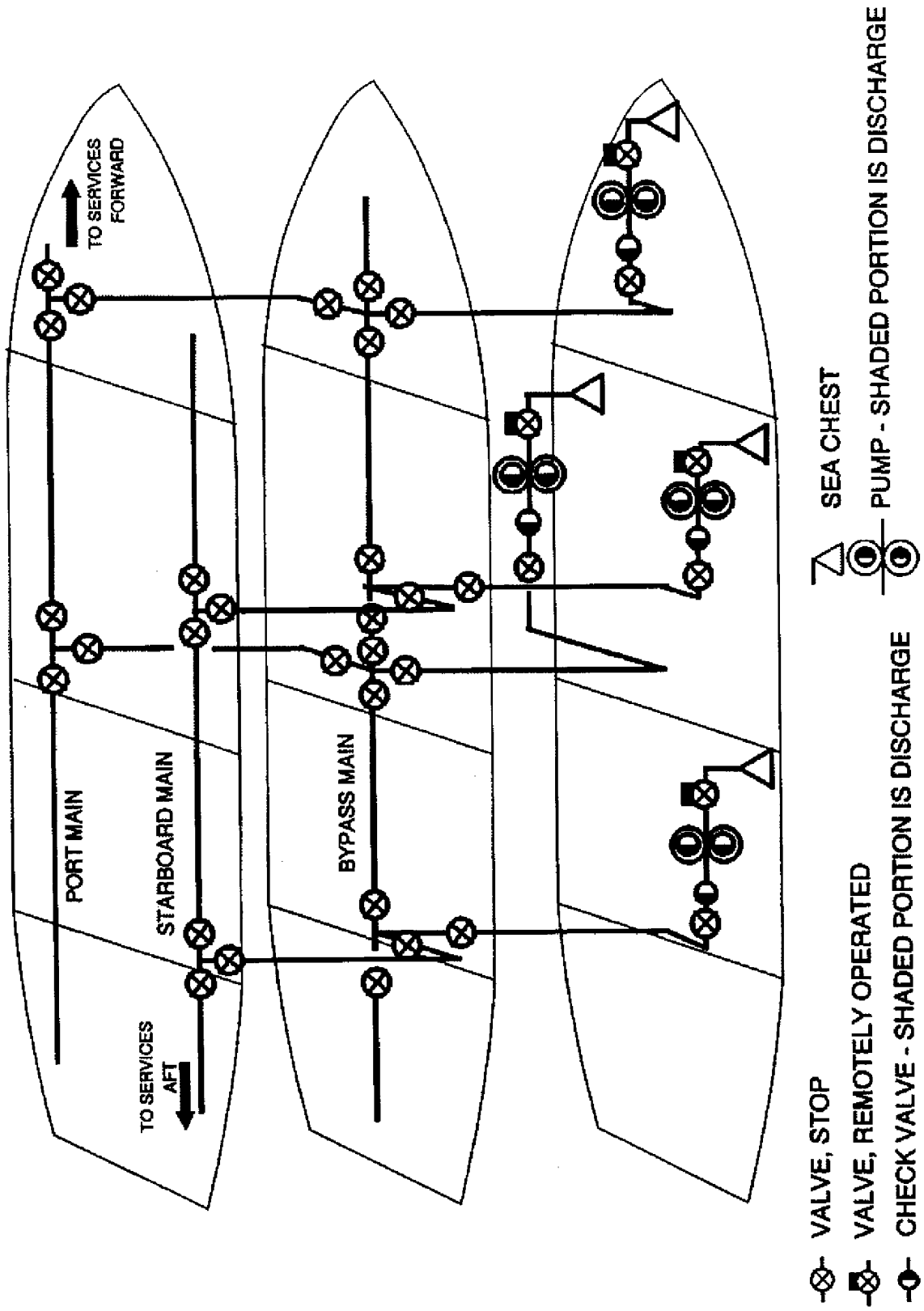

Figure 555-2-4 Typical Composite Firemain System

555-2.3.4 FIRE PUMPS. Fire Pumps are driven by either electric motors or steam turbines. Fire pumps are provided with suction and discharge cutout valves and a separate sea chest valve if more than one pump takes suction from a common sea chest and suction header (see Figure 555-2-5). In most installations each pump has its own suction piping and sea chest, which is not shared with any other service or any other fire pump. These sea chests are separated fore and aft and athwartships. They are also located to preclude ingestion of air from hull masker systems, drainage eductors and from possible flammable fluid discharges. Valves permit isolation of the pumps from the sea and the firemain for damage control purposes, and permit pump maintenance. A check valve is installed in the discharge line for each fire pump to prevent back flow through the pump, to prevent the rotating assembly from rotating opposite of design and to prevent subsequent loss of firemain pressure in the event of pump failure or inadvertent pump shutdown. To prevent overheating during low flow conditions, each fire pump is equipped with recirculation line which connects the pump discharge to either the pump suction line or overboard, and which includes an orifice sized to pass approximately 5 percent of the pump's rated capacity. Each fire pump is provided with a casing vent to alleviate air binding and a casing drain for maintenance. Fire pumps are required to be vented prior to startup. Each discharge recirculation line for turbine driven centrifugal fire pumps is fitted with a relief valve set at 125 percent of the firemain's rated pressure.

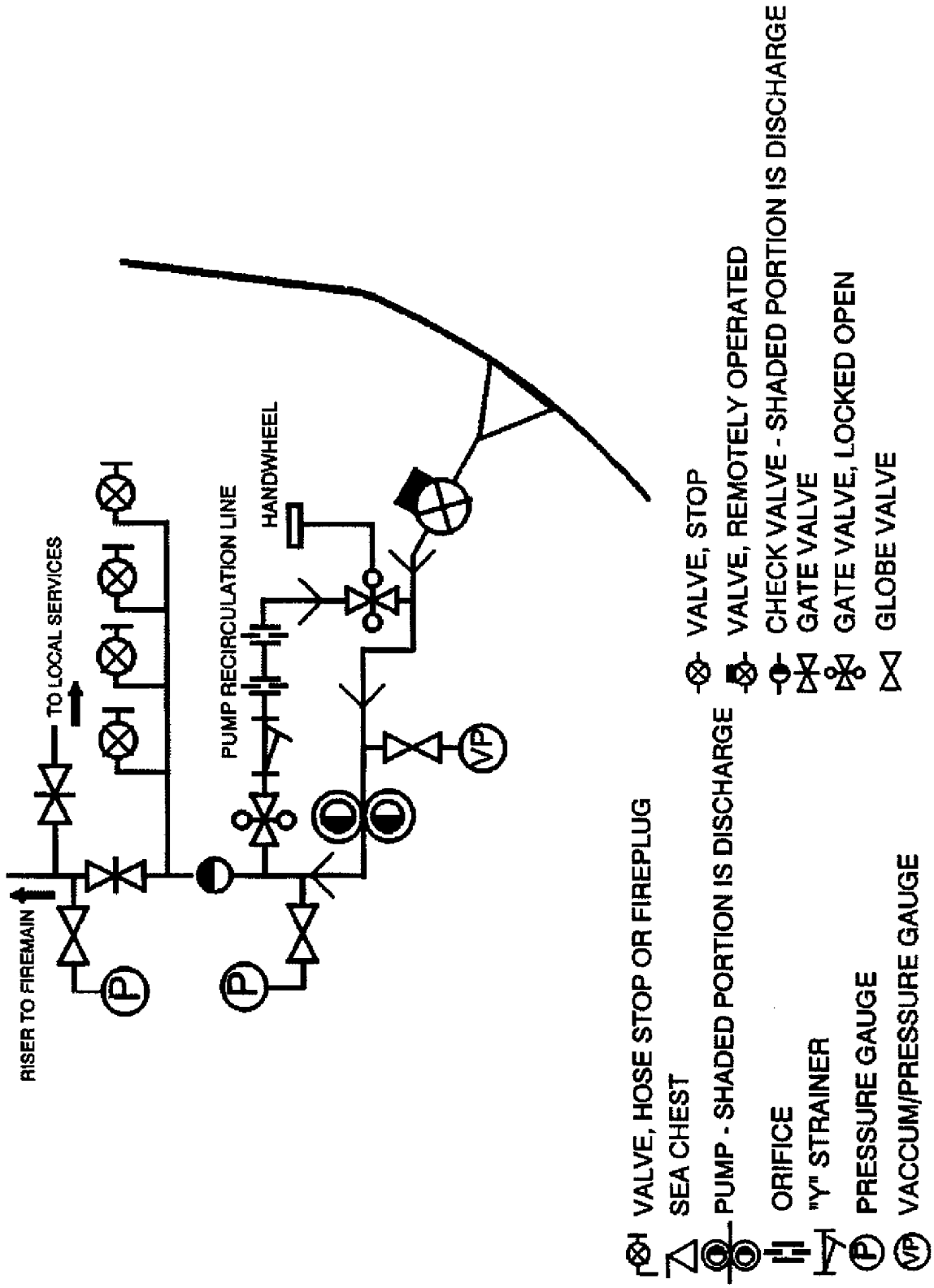

Figure 555-2-5 Typical Firemain Pump Riser

555-2.3.4.1 Number and Size of Fire Pumps. The number of fire pumps on Naval ships permit the largest fire demand, all vital continuous loads and the largest backup cooling or 10 percent of all backup cooling demand to be satisfied with only 75 percent of the installed pumps operational. Pumps are usually installed in separated locations along the length of the ship. Electric motor driven pumps have normal and alternate independent power sources. The optimal design goal is to locate at least one fire pump in each fire zone or Collective Protection System (CPS) zone, with the pumps in the forward most and after most zones located as far forward and as far aft as possible. Steam driven fire pumps should be near the steam supply and there should be a fire pump near the emergency generator, when installed. Pumps are typically located to ″bracket″ large hazards, which means they are located on either side of the hazard, and are located in each fire zone. Pumps are located below the water line to provide a minimum positive static head of three (3) feet under all conditions of load and a list of up to fifteen (15) degrees.

555-2.3.4.2 Navy Standard Fire Pumps (NSTFP). The Navy standard fire pump (NSTFP) is an electric motor driven centrifugal, close coupled pump of titanium construction. The standard configuration includes both the pump and a totally enclosed, fan cooled, energy efficient motor. The pump with the motor is procured in accordance with Standard Drawing NAVSEA 803-5773202. The standard fire pump can be procured in horizontal configurations with six interchangeable impellers to achieve various pressure heads and flow capacities. The six impellers are designed for the following head and capacity ratings:

a. 750 gpm at 125 psi

b. 750 gpm at 150 psi

c. 900 gpm at 125 psi

d. 1000 gpm at 125 psi

e. 1000 gpm at 150 psi

f. 1000 gpm at 175 psi

555-2.3.4.2.1 The centrifugal pump design of the NSTFP is particularly suited for firemain service because it will deliver a wide range of flow rates within a relatively narrow pressure range. The pump zero flow, or shutoff head is limited to approximately 1.2 times its rated head to prevent large fluctuations in firemain pressure as seawater demand varies and to prevent excessive firemain design pressure. More detailed operational and maintenance procedures for the NSTFP can be found in **NSTM Chapter 503** and NAVSEA Technical Manual S6225-W6-MMA-010/53711.

555-2.3.4.3 Electric Motor-Driven Versus Steam Turbine-Driven Fire Pumps. Electric motors are preferred over steam turbine drives because they are

a. more reliable because of less moving parts,

b. require less maintenance,

c. provide rapid start and stop control, and

d. are easier to install

555-2.3.4.3.1 A major disadvantage of motor driven pumps is that they often operate near their shutoff head because they operate at constant speed. This causes extreme wear on pump parts. The ability to vary the speed

and capacity of a turbine-driven fire pump provides a benefit on ships with large variable firemain loads (i.e. aircraft carrier jet blast deflectors). For firemains which have turbine driven fire pumps, steam supply is a backup to electric power for firemain supply.

555-2.3.5 CROSS-CONNECTIONS, RISERS, AND BRANCHES. The mains of loop and composite configurations are cross-connected in each main traverse watertight subdivision. Cross-connections, risers and branches are installed so they do not penetrate any main transverse watertight bulkhead below the tightness level.

555-2.3.5.1 Risers. Risers in horizontal loop systems generally are led from cross-connections. Risers in vertical loop and composite configurations are led from cross-connections and upward only from the upper mains as necessary to best supply services above the loop. Risers to the various services are led up to the main of a single main system. Fire pump risers discharge into the main of a single main system, and into the cross-connections of loop and composite configurations.

555-2.3.5.2 Branch Lines. Branch lines are installed to distribute seawater from the main to the service. The number of connections to the main is kept to a minimum to improve the speed and ease of damage control actions, to reduce costs, to reduce the number of cutout valves and for simplicity. A single connection is made to the main for all services in the same vicinity. Connections are made such that closing a cutout valve for a nonvital system does not affect a vital system. Branch lines are not permitted to cross main watertight boundaries. In general, a single connection of ample size is installed to supply services in the vicinity through a manifold, or to individual branches from the large branch, through Y fittings. Branches from the firemain for services below the watertight level are taken from within the same main transverse watertight subdivision. Branches for essential battle services, such as fireplugs; sprinkling; water-curtains; foam proportioners; drainage eductors; and cooling water to diesel engines, compressors and similar auxiliaries are located so that the closing of cutout valves will deprive nonessential services of a supply of water, and maintain a supply to essential services.

555-2.3.5.3 Magazines. Connections to services in magazines are usually made in trunks or handling rooms to avoid locating valves in the magazines.

555-2.3.5.4 Fireplugs. Fireplugs are described in paragraph 555-4.4.

555-2.3.6 STRAINERS. Foreign substances, encrusted particles and marine growth accumulate inside the firemain system. These substances are especially prevalent in the tropics.

555-2.3.6.1 Y-type strainers are installed in firemain branch lines for services such as AFFF to protect the control valves of these systems. The flushing lines should be opened periodically to flush out any debris and prevent excessive pressure loss through the strainer.

555-2.3.6.2 Suction lines of the fire pumps are protected by hull plate strainers. The strainers remove large particles and marine growth from the incoming seawater.

555-2.3.7 VALVES. Valves in the firemain consist of cutout valves, check valves, pressure regulating valves and relief valves. Valves are controlled locally or remotely at various stations throughout the ship. Major segregation and cutout valves can be operated from the damage control deck. Each valve is assigned a damage control number in order to identify the location of the valve, should it become necessary to secure or isolate a portion of the system.

555-2.3.7.1 Cutout Valves. The cutout valves can be gate, ball, globe, or high performance butterfly valves. Butterfly valves are not used as sea chest valves, YOKE DC valves, or ZEBRA DC valves. Cutout valves are installed in the main, and on each side of risers which lead to services provided by the firemain. Due to weight saving advantages, high performance butterfly valves are allowed as WILLIAM cutout valves for sizes of 2-1/2 inches and above. The exceptions to this are valves used for sea chest service or where gate or ball valves are used to provide positive closure during damage control efforts due to more reliable seating, and the criticality of hull integrity valves. Cutout valves that isolate portions of the firemain are provided with either manual, electrical or hydraulic remote control. Hydraulic remote control may also be used for fire pump suction valve operation.

555-2.3.7.2 Check Valves. Check valves are installed to prevent return or back flow in pipes. These are automatically operated valves without handwheels or stems. They are also installed on the discharge side of centrifugal fire pumps, to prevent back flow and resultant reverse rotation of secured pumps.

555-2.3.7.3 Pressure Regulating Valves. Pressure regulating systems with cutout valves, cascade orifice restrictive device and pressure regulating valves are installed on some ships. When firemain pressure increases because of low demand from installed services, the pressure regulating valve will open to divert flow overboard. This provides an artificial load for a pump which would otherwise operate in or near a no-flow condition. As firemain pressure drops due to additional services being energized, the flow overboard is reduced.

555-2.3.7.4 Relief Valves. Relief valves are installed on the recirculation line downstream from turbine driven pumps. Downstream of the firemain cutout valve other relief valves are located on the service side of pressure reducing stations to protect equipment from reducing station failure.

555-2.3.8 SEGREGATION. The firemain system for each ship is carefully planned by NAVSEA to determine the exact number of independent segregations which would be practical during battle. Optimum segregation of the system will result in the minimum loss of available water for firefighting should damage be incurred and at the same time will insure an adequate water supply to meet the demands or other ship's services. See **NWP 3-20.31 Surface Ship Survivability (series)** for more information.

555-2.3.8.1 Should damage destroy one independent section, isolation of the damaged part of that section can permit the supply or firemain pressure to the undamaged parts of that section.

555-2.3.8.2 Should a section of piping be ruptured or damaged, the cutout valves on either side of the break can be closed and the damaged section removed or repaired. Temporary service can be restored by inserting hose adapters and connecting a length of firehose between the adapters. Damage control hose-flange adapters are provided to repair parties so that such temporary connections or jumpers may be rigged. These hose-flange adapters can be bolted (or clamped with C-clamps) into place quickly and easily. The damaged section of piping shall be repaired as quickly as possible. See paragraph 555-7.14.3 for guidance on rigging a jumper around damaged piping.

555-2.3.8.3 To obtain optimum segregation of the firemain, all valves, fittings, and associated controls are designated X, Y, and Z to coincide with the three material conditions of readiness, X-RAY, YOKE and ZEBRA.

555-2.3.9 APPLICATION OF SEGREGATION. To describe in general terms the application of segregation of the firemain as to time, place and situation, the conditions described in the following paragraphs apply. These conditions, however, are subject to authorized change.

555-2.3.9.1 Condition X-RAY, Classification X. In condition X-RAY, the firemain normally is operated as a single system. All valves and fittings marked X are closed, and all valves and fittings marked Y, Z or W remain open. Pressure is maintained on the firemain by a minimum number of pumps as service demands require.

555-2.3.9.2 Condition Yoke, Classification Y. War cruising and other situations covered in **NWP 3-20.31 (series)** , require that the material condition of readiness Yoke be established. All valves and fittings in the firemain system designated by X and Y are closed. This sectionalization usually creates two or more separately operating firemain systems (either forward and after systems, or port and starboard systems). In certain ships condition Yoke provides almost complete sectionalization, allowing condition Zebra, the final stage, to be set quickly by closing a minimum number of additional valves and fittings. Most ships achieve only partial sectionalization of the firemain system in condition Yoke because of the location of certain pumps, a possible heavy resultant electric load, a desire to have spare pumps available for repair and maintenance operations, or for various other reasons associated with the ship's particular firemain installation.

555-2.3.9.3 Condition Zebra, Classification Z. Condition Zebra produces the maximum degree of segregation in the firemain system. It is required during General Quarters, collision, and other hazardous situations, as prescribed by **NWP 3-20.31 (series)** . Some ships have their firemain system sectionalization into its ultimate number of sections during condition Yoke and continue this during condition Zebra. This is particularly true of smaller ships, but certain of the larger ships which maintain a quartered (four section) sectionalization in condition Yoke continue that sectionalization in condition Zebra. Other larger ships advance from a two-section war cruising condition firemain sectionalization into as many as six separate and independent systems for battle.

555-2.3.10 INSTRUMENTS AND CONTROLS FOR FIREMAIN. Various instruments, gages, and controls allow the system operator to monitor the firemain for routine conditions and for emergency situations. Primary monitoring of the firemain is normally exercised from Damage Control Central (DC Central) or the damage control console in the Central Control Station. Gage boards, panels, or on newer ships, a centralized cabinet type control console in DC Central, Central Control Station, or mimic panel provide the watchstander the necessary displays and controls. Control of the firemain valves may be as follows:

a. Local - by handwheel or other manual device, as well as by a push-button control, governor, or regulating device.

b. Remote - electrical push-button, hydraulic valve control, mechanical remote operating gear or other means not in the vicinity of the valve or pump.

c. Automatic - self-regulating device, such as a pressure regulating system, pressure regulation valve or pump governor.

555-2.3.10.1 Controls. Controls may include:

a. Automatic start of selected motor driven fire pumps initiated by flow to a sprinkler system or missile quench injection system, or low firemain pressure.

b. Manual start of fire pumps from DC Central, Central Control Station, DC Deck or locally at the pump.

c. Manual push-button control of electric motor driven valves.

d. Manual push-button control of electric motor driven fire pump suction and discharge valves in some ships for DC Central or the Central Control Station and the DC Deck. In general, electrical interlocks are provided to inhibit pump start up if fire pump suction valves are closed.

e. Governor controls are available for steam turbine driven fire pumps to regulate speed and, therefore, control pressure or flow rate. The turbine is controlled locally.

555-2.3.10.2 Instrumentation. A combination vacuum and pressure gage is installed on the suction piping of each fire pump. A pressure gage is installed on the discharge piping from each fire pump. Main and secondary DC Central and the DC Repair Stations are equipped with gages to indicate firemain pressure in segregated sections.

555-2.3.11 FIREMAIN OPERATION. The firemain system draws water from the sea and distributes it throughout the ship. The firemain system is one of the critical auxiliary systems which may determine whether a ship survives battle damage. On most ships, the firemain also provides services critical for peacetime operation. It can operate in a degraded condition after battle damage. Depending on the details of a particular ship class, the following services may be provided by the firemain:

a. Fire suppression and extinguishment

b. Countermeasure washdown of external ship's surfaces

c. Equipment cooling, either normal or emergency backup

d. Dewatering

e. Ballasting and list control

f. Sanitary flushing

g. Emergency shielding and cooling to nuclear reactors and reactor support equipment

555-2.3.11.1 Performance Extremes. The number of fire pumps, the operating pressure, and the size of the firemain piping have all been selected to provide the required flows and pressures under extreme or casualty conditions. On most ships, the largest design load is the operation of the Countermeasure Washdown System, with all zones flowing simultaneously. For wet-well amphibious ships, firemain fill to ballast tanks may be the largest design load, and on salvage ships, off-ship fire fighting or salvage requirements may be the largest design load. On most ships, the next largest design load is a conflagration, either a vertical fire involving multiple decks or a horizontal fire involving adjacent spaces on one deck. The system is sized with sufficient margin to supply vital cooling loads and the largest backup cooling load, and to account for 25 percent of the pumps out of commission while supplying the largest design load. For each ship class, the fire pump pressure rating was selected to ensure the most remote fire plug will receive its required pressure. Many services lower in the ship or closer to the fire pumps are protected against over pressurization by pressure regulating system, pressure regulating valves or by orifices. The distribution piping will accommodate the largest design flow rate when supplied by the pumps most remote from the services.

555-2.3.11.2 Control From the Damage Control Deck. Essential elements of the firemain can be monitored and operated from the Damage Control Deck (DC Deck). Operation from the DC Deck is needed for pumps and valves located in normally unmanned spaces which are difficult to access, such as pump rooms. Remote operation from the DC Deck is also needed for pumps and valves in manned spaces which may be damaged or become inaccessible due to battle damage. Pumps and valves which survive the weapon effects must be capable of operation from outside the space to avoid breaking watertight integrity and because entry may be blocked. The principal isolation and cutout valves will be on the DC Deck, or operable from the DC Deck by remote operating gear or by valve actuators controlled from the DC Deck. Even on ships with steam driven fire pumps, at least

some fire pumps will be motor driven and controllable from the DC Deck. These design features provide the necessary flexibility for reconfiguring the firemain, or adding, shifting and securing pumps under battle conditions.

555-2.3.11.3 Maintaining Positive Control of the Firemain. The authority to start or stop fire pumps resides with the Engineer of the Watch (EOOW) underway, and the Duty Engineer in port. Reports regarding the operation of all pumps and services should be passed to them. Each ship must establish procedures to ensure the following events are reported, whether inport or underway.

a. Start and stop of pumps, including the set point of the regulators for steam turbine driven pumps if installed
b. Firemain pressure out of tolerance band
c. Start and stop of firemain cooling water to ship's machinery or combat systems equipment
d. Start and stop of dewatering eductors
e. Start and stop of ballasting which requires firemain
f. Casualties and repairs to firemain equipment
g. Isolating a pump or firemain segment--because of casualty or maintenance tagout
h. Setting or relaxing material conditions
i. Alarm indications of fire emergency
j. Complaints or other indication of inability to provide adequate seawater service to any user

555-2.3.11.3.1 Without positive control of the system or the ability to predict what will happen next, the firemain system operator can only react to system changes after they occur. Operating in reaction mode creates vulnerabilities:

a. A medium or small firemain break will be noticed by the as a drop in pressure, the same as would be caused by an intended service being placed on line. The response will be to add one or more pumps.
b. Over time, the tendency is to run more pumps than required, which causes high firemain pressure, premature fire pump failure, premature firemain system failure, and inefficient operation.
c. In the event of a large sudden firemain demand, there will be a delay until sufficient pumps can be brought on-line to satisfy the demand.

555-2.3.11.3.2 The firemain operator should keep track of the services being supplied, the valve configuration in the system, the condition of readiness (X-RAY, YOKE, OR ZEBRA) invoked and probable, and the potential for large demands, and then pre-configure fire pumps to meet the needs. This is a prediction style process, and it means the system operator is in positive control of the system, and the system will be in the best condition to meet normal demands and respond to casualties. To achieve this, each ship should develop a method for tracking the status of services and pumps, and develop a table or other tool that will show the expected firemain pressure under different combinations of pumps, services, and material condition. This information, combined with experience, will allow the system operator to predict the number of pumps which ought to be sufficient at any given scenario, and the operator will therefore be able to determine when something is wrong in the system.

555-2.3.11.4 Firemain Pressure. The firemain should be operated at the lowest pressure sufficient to meet the needs of the connected services. On most ships, minimum operating pressure is derived from the need to main-

tain pressure at the highest fire plug. The actual firemain pressure at any particular moment is determined by the available number of pumps on line and the services on line.

555-2.3.11.4.1 Effect of High Pressure. When the discharge pressure at a fire pump is higher than its design pressure rating, the flow from the pump is lower than its design flow rating. At low flows, the pump will vibrate, leading to stress on the bearings, seals, and pump mechanical seals. The lower the flow from the pump, forcing the pump to not operate as designed, will result in more stress on the pump causing premature failure. All portions of the firemain system are designed to withstand the maximum pressure produced by the pumps, but the less stress on seals, gaskets, and pressure reducing valves, the less maintenance will be required. To lower the firemain pressure and increase flow through operating pumps, reduce the number of pumps on line or place additional services on line without adding pumps. Some ships are equipped with pressure regulating systems and pressure regulating valves, which will open during high pressure conditions and divert flow to the sea, thus increasing the flow rate through the operating pump or pumps and reaching design intentions.

555-2.3.11.4.1.1 During operation, a pressure increase in the firemain will be due to a pump being started or services being secured. Closing a main segregation or cutout valve can also cause high pressure, because the closed valve may block the flow of water from a pump to a service.

555-2.3.11.4.2 Effect of Low Pressure. When the flow from the pump is higher than its design flow rating the discharge pressure at a fire pump is lower than its design pressure rating. In this situation:

a. The pressure at the highest fire plug may fall below its design pressure rating.

b. Power requirements of motor driven pumps will increase. The motor that drives the NSTFP can power any flow rate achievable by the pump. For other pump and motor combinations, it may be possible to overload the motor at high flow rates. To determine this possibility, consult the curves of pump power and motor current in the pump technical manual.

c. Motor driven pumps will operate nearer to their point of best efficiency, for pressures about 20 psi less than the design rating.

555-2.3.11.4.2.1 At extremely high flow rates, the pump may cavitate and lose suction. To raise the firemain pressure, place additional pumps on line or secure services. Correct load management by matching pump and system design characteristics is critical to lower life cycle maintenance.

555-2.3.12 FIREMAIN FAULTS. A firemain fault is sudden departure from expected operational limits, principally a sudden loss of pressure or flow. A sudden loss of firemain pressure means that not enough flow is getting to the connected services. This condition may be caused by:

a. A large demand placed on line, such as a main eductor or large sprinkling system.

b. A pump problem, such as a mechanical failure in the pump or driver, a steam or electrical failure to the pump driver, or loss of pump suction by clogging or air ingestion.

c. A pipe rupture somewhere in the system.

555-2.3.12.1 Locating Firemain Faults. A firemain load that is big enough to cause a significant drop in pressure should be accompanied by a system signal or watchstander report. The automatic sprinkling systems are equipped with flow switches. There will be a watchstander report before connecting large loads such as emer-

gency auxiliary cooling or a dewatering eductor. By maintaining positive control of the firemain, large intended demands will be identified and will not surprise the firemain system operator. Because a loss of firemain pressure can be caused by a failure of a pump, the firemain system operator should direct pump watchstanders to check all operating pumps.

555-2.3.12.1.1 There are no foolproof techniques by which a central watchstander acting alone can locate pipe ruptures. After a rupture, a pressure pulse travels through the firemain system within tenths of a second, and the system will react by re-establishing an equilibrium. This change of equilibrium within the fire main will preclude the use of pressure gauges within the damaged area of the main to precisely locate a rupture. Pipe ruptures must be located using all available information:

a. Installed sensors, including pressure gages (to determine the area of the main damaged), flooding alarms, and equipment status indicators. A loss of signal can indicate damage that may be linked to the firemain damage.

b. Reports from Combat Information Center or the bridge, regarding the location of general battle damage.

c. Reports from watchstanders and damage control investigators.

555-2.3.12.1.2 If one or more system segregations have lost pressure and there are few or no clues available to help determine the location of the rupture, then systematic valve operation may help locate the rupture. The following conditions must be met:

a. There is no useful firemain pressure available. That is, no further harm will come from isolating undamaged portions of the firemain system.

b. The firemain system operator must be able to open and close segregation and isolation valves in the main and riser piping. Personnel at the DC deck valve operating stations can do this, or central control of motorized valves may be available.

555-2.3.12.1.3 Follow this procedure:

a. Determine the number of fire pumps that can be used to supply the portion of the firemain in which pressure cannot be maintained. Available electrical power may limit the number of pumps that can be operated.

b. Split the firemain into segments, one segment for each pump that can be operated.

c. Start the pumps. If pressure cannot be maintained in a segment, there is a rupture somewhere in that segment. The pumps in segments that maintain pressure should be left operating.

d. For segments in which pressure cannot be maintained, close valves farthest from the pump and check to see if pressure is regained. If not, repeat. When pressure is regained, the rupture or ruptures will be downstream of the last valve closed.

e. At this point, there may be portions of the firemain that are undamaged but isolated from any pump. To recover these, cautiously open valves to connect them to the adjacent segment pressurized from a different pump. Caution is required because these isolated segments may be ruptured, but the damage was masked by a damaged segment that was closer to the pump.

555-2.3.12.2 Responding to Firemain Faults. If a pressure drop was caused by a large service that was intentionally placed on line, start one or more additional pumps to regain pressure, or secure other connected services.

For pump problems, follow troubleshooting and recovery actions described in the ship's engineering casualty control manual, the pump technical manual, or **NSTM Chapter 503** .

555-2.3.12.2.1 For piping ruptures, the traditional damage control response is to isolate the damage. Since it may take several minutes for damage control personnel to locate the rupture and the nearest firemain cutout valves, it may be prudent to close the system isolation valves at the damage control boundaries established by the DCA. This action will rapidly restore firemain pressure to the undamaged portions of the ship, including the staging areas from which the fire parties will advance on any fires. This action will also isolate undamaged portions of the firemain that are within the damage control boundaries. If the firemain rupture has a caused a general loss of firemain pressure, no further harm will be caused by isolating the undamaged portion--there was no pressure available anyway.

555-2.3.12.2.2 Because of the redundant pump capacity built into Navy ships, it may be possible to operate the firemain system without isolating the damage. This course of action may be prudent if isolating the damage would also isolate vital services, such as cooling to ship's combat systems, cooling to emergency generators, or fire fighting. This course of action will cause continued flooding, but the flooding may be a less immediate threat to the ship's survival than continued enemy attack or a conflagration. To implement this course of action, start additional fire pumps to regain system pressure. As time and resources permit, damage control personnel should continue their efforts to close cutout valves near the rupture, and secure non-vital services throughout the ship. Table 555-2-1 shows the time to flood a hypothetical compartment, under the assumptions shown.

Table 555-2-1 MAXIMUM FLOODING RATES FOR VARIOUS PIPE SIZES

Nominal Pipe Size	Outside Pipe Diameter (inches)	Open Pipe Flow (gpm)	Open Pipe Flow (ft^3 /min)
1.0	1.315	90	12
1.5	1.900	190	25
2.5	2.875	450	60
3.0	3.500	670	90
3.5	4.000	890	120
4.0	4.500	1120	150
5.0	5.563	1730	230
6.0	6.625	2470	330
8.0	8.625	4240	570
10.0	10.750	6590	880
12.0	12.750	9180	1230

Notes:
1. Pipe sizes are based on copper-nickel pipe, MIL-T-16420 class 200.
2. The indicated flows are a worse case scenario assuming a clean break of the pipe.
3. Fluid velocity at the break is assumed to be 25 ft/sec due to valve cavitation limitations.
4. Ruptured pipe flow assumes sufficient pump capacity is available.

555-2.3.12.3 Fouling by Marine Growth. One common cause of firemain malfunction is fouling by marine growth which accumulates inside the piping. It will build up in a pipe, decreasing the pipe's internal cross-section area, and result in a decreased supply of water at the fireplug. This growth will also accumulate on the valve seats, valve discs, and stems, preventing the valve from seating properly or the stem from working freely. Rapid

fouling of the firemains by marine growth is experienced in many ships, particularly ships operating in tropical waters. Flushing procedure and periodicity shall be in accordance with **NSTM Chapter 505** and PMS.

a. Vertical Offset Loop System.

b. Composite System.

555-2.4 OPERATION AND DESCRIPTION OF FOAM SYSTEMS

555-2.4.1 PURPOSE. AFFF systems are installed on surface ships to protect machinery spaces, fueled vehicle stowage spaces, helicopter hangars, landing platforms, refueling stations, flight decks, hangar bays, fuel pump rooms and other compartments or areas where flammable liquid fires are likely to occur. See paragraph 555-3.1 for more information.

555-2.4.2 METHOD OF SUPPLY. AFFF is generated by the following methods.

a. **Balanced Pressure Proportioner.** The balanced pressure proportioner (see Figure 555-2-6) does not inject a set amount of concentrate into the seawater but proportions the amount depending on the demand (see paragraph 555-3.1.5).

b. **Two Speed Pumps.** Two speed pumps rated at 27/65 gpm are installed at high capacity foam stations (see Figure 555-2-7 and paragraph 555-3.1.3). These pumps inject rated capacity of AFFF concentrate for the speed selected. The speed at which the pump operates depends on the demand of the system. If only a hose line is needed, the low (27 gpm) speed is actuated. If AFFF for a sprinkler group is needed, the high speed (65 gpm) mode is actuated.

c. **FP-180 Proportioner.** The FP-180 proportioner injects a metered amount of AFFF concentrate for a 60 to 180 gpm demand. This proportioner is being replaced by balanced pressure proportioners, or fixed AFFF eductors for selected small demands (see paragraph 555-3.1.5).

d. **Single Speed Pump.** Single speed pumps are rated at 12, 27, and 60 gpm (see Figure 555-2-8 and Figure 555-2-9 and paragraph 555-3.1.2). These pumps inject their rated capacity of AFFF concentrate into the seawater main to produce AFFF.

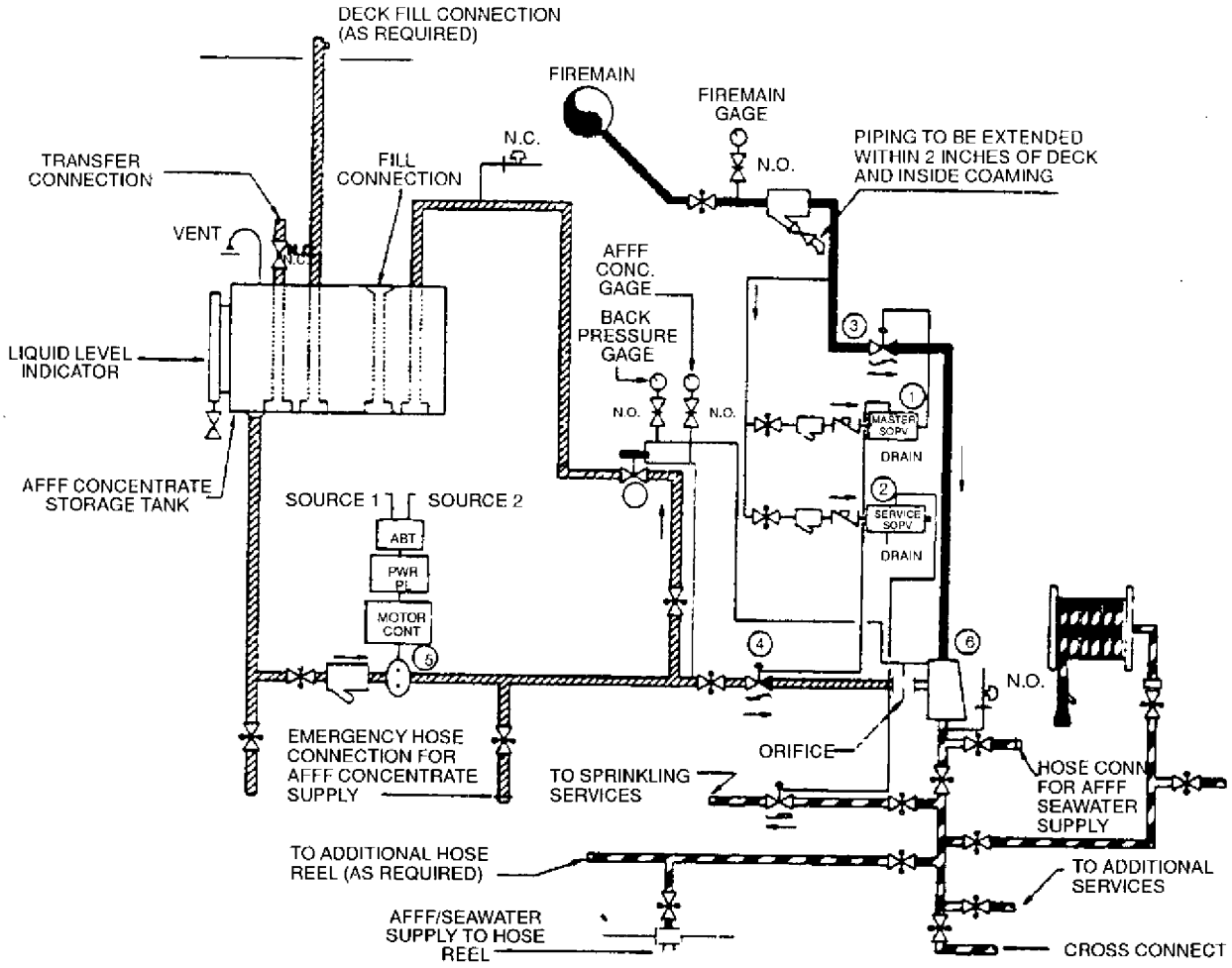

Figure 555-2-6 Typical Balanced Pressure Proportioner System

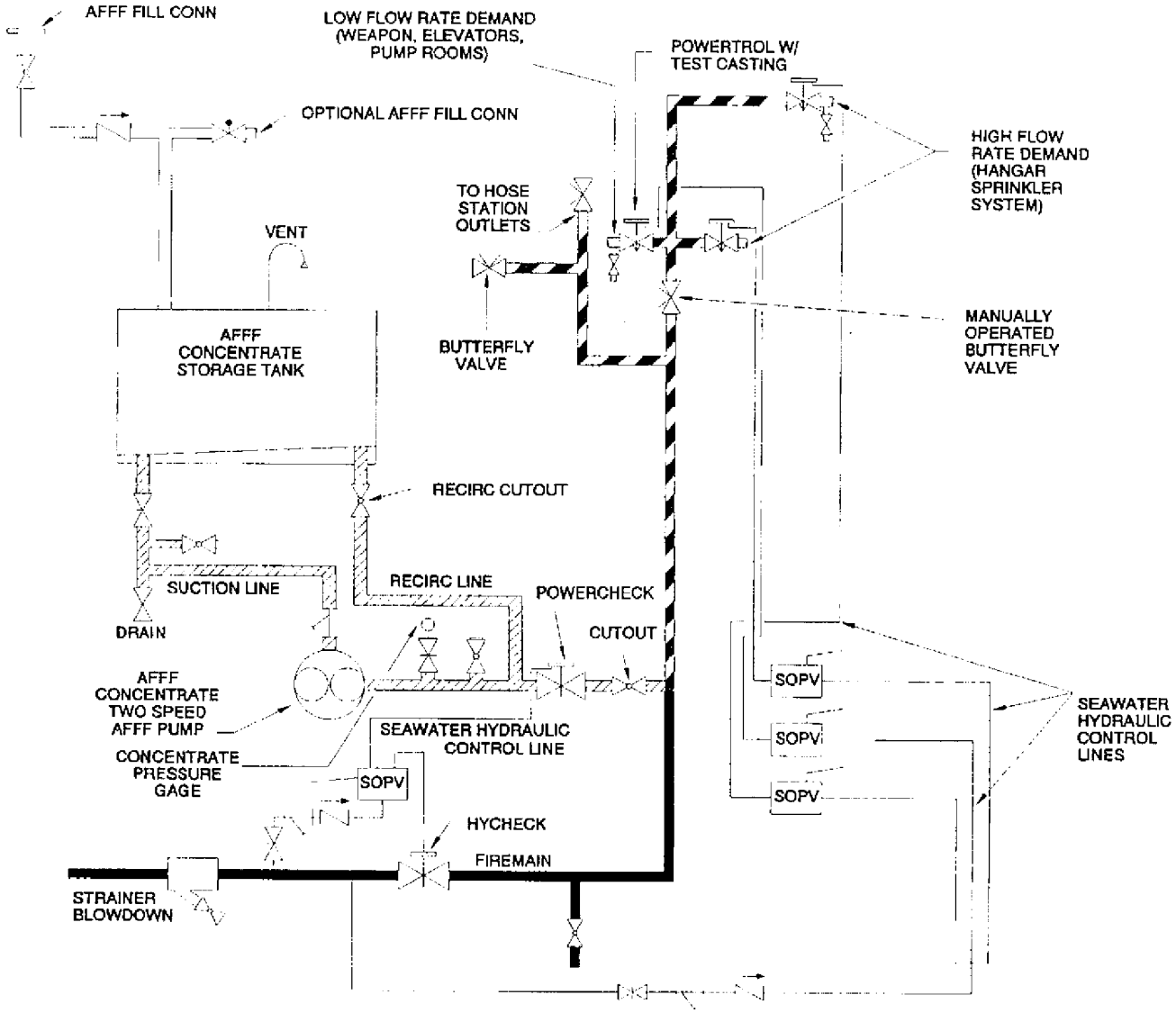

Figure 555-2-7 Typical Two Speed Aqueous Film Forming Foam System

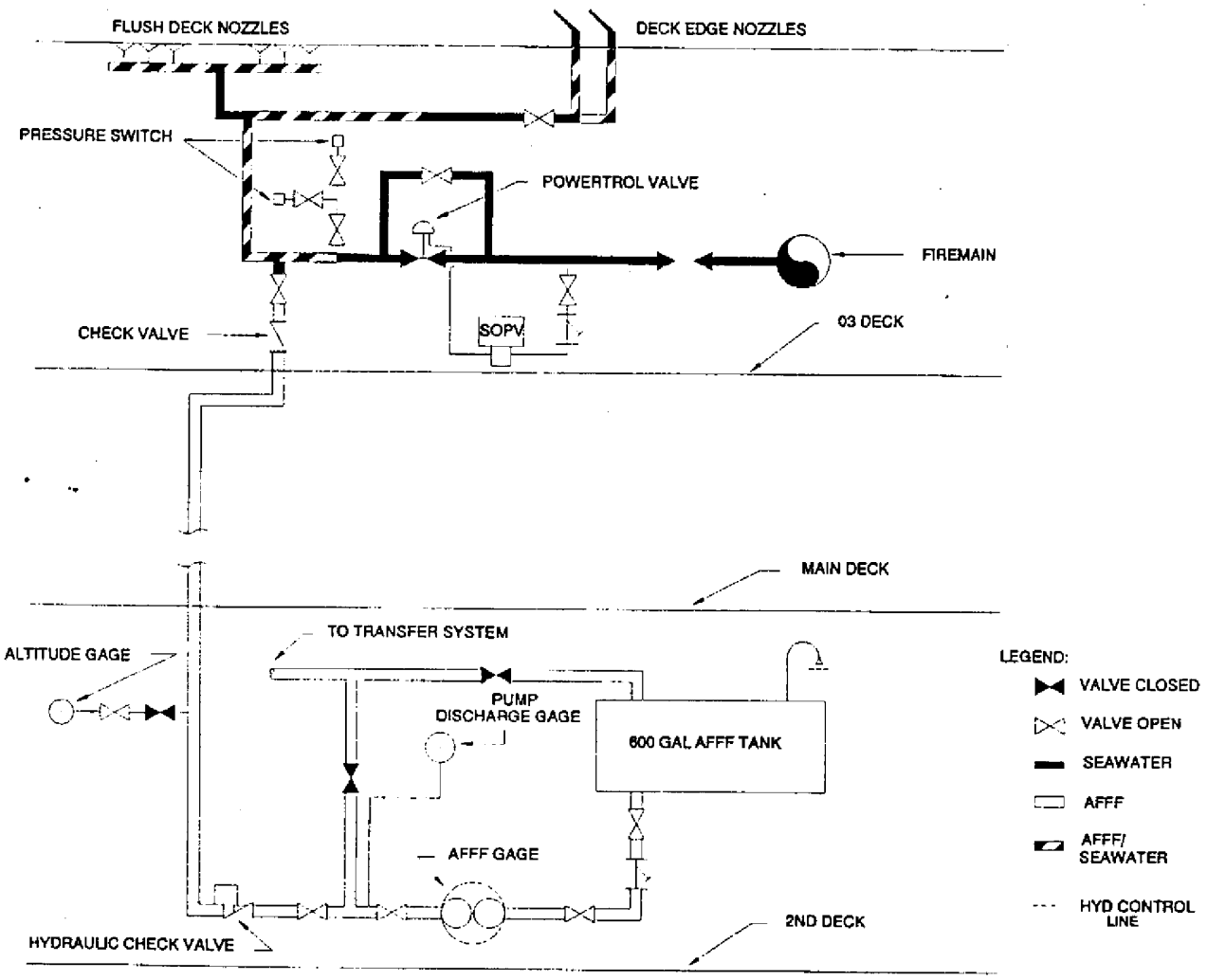

Figure 555-2-8 Typical High Capacity Single Speed Pump System

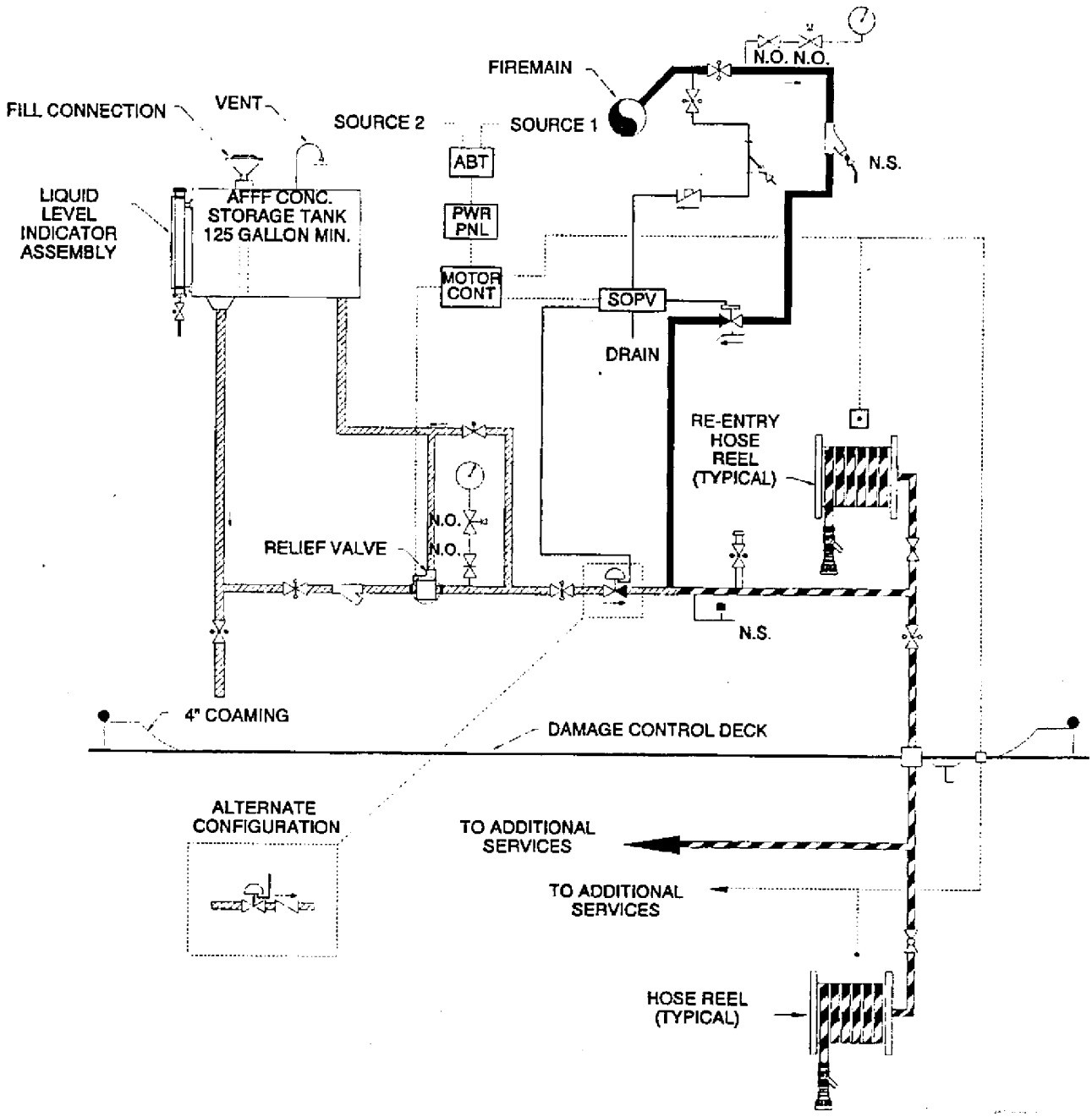

Figure 555-2-9 Typical 12 GPM Single Speed Pump System

555-2.4.3 AQUEOUS FILM FORMING FOAM STATION ACTUATION. AFFF station actuation is hydraulic or electrical. Hydraulic actuation is accomplished by means of a manual control valve and electrical actuation by means of switches which energize a solenoid operated pilot valve (SOPV).

555-2.4.3.1 Electrical Actuation. The sequence for activating an electrically operated AFFF station is described below (see Figure 555-2-6). The circled numbers on the figure correspond to the reference numbers in parenthesis:

a. SOPV's (1) and (2) are electrically operated valves that control the actuation of the AFFF system. All SOPV's (master or service) have four control line ports. One port is always connected to firemain supply pressure. A second port is always connected to a drain pipe. The other two control ports are connected by control lines to diaphragm operated control valves, or one will be plugged if not used.

b. A single master SOPV (1) controls actuation of the entire proportioning subsystem (hydraulic actuated valves and AFFF concentrate pump). A separate service SOPV (2) allows flow through the distribution subsystem (Powertrols) to the individual demands served by the station.

c. The Hycheck (3) and Powercheck (4) valves are connected to the master SOPV by seawater (firemain pressure) control lines. When the master SOPV is energized, the control line to the Powercheck valve (4) is pressurized. This in turn opens the Powercheck valve permitting AFFF concentrate, under AFFF pump pressure, to flow to the venturi (6). At the same time, the SOPV relieves pressure in the Hycheck control line. This allows the Hycheck (3) to be forced open by the firemain pressure and allows the seawater to be mixed with the AFFF concentrate in the venturi (6). The balancing valve (7) then regulates the amount of AFFF required by sensing the demand on the system and recirculating AFFF as required. All SOPV's are actuated either electrically by pushbutton or manually by rotating a T-handle within the enclosure of the SOPV.

d. From the AFFF station, AFFF/SW solution is supplied to sprinkling groups in hangars, machinery room bilges, pump rooms, hose reels, flight deck washdown systems and other foam stations through valved cross connections.

555-2.4.4 HIGH CAPACITY AQUEOUS FILM FORMING FOAM PROPORTIONING SYSTEMS. High capacity AFFF proportioning systems are installed on ships that require large quantities of AFFF to supply hose stations and AFFF sprinklers. There are three types of high capacity AFFF systems installed on board navy ships; balanced pressure proportioners (see Figure 555-2-6), electric two speed AFFF pumps (see Figure 555-2-7), and high capacity single speed pumps (see Figure 555-2-8). The 12 GPM single speed pump and FP-180 water motor proportioner are low capacity systems (see Figure 555-2-9).

555-2.4.4.1 Tanks. High capacity AFFF systems are supplied from an AFFF concentrate holding tank. The capacity of the tank is determined by the firefighting demands of the system it supplies. An AFFF tank is located inside each station.

555-2.4.4.2 Pumps. The operation of the electric single speed pump, two speed pump, and balanced pressure proportioner with their associated stations is described in paragraphs 555-3.1.2 and 555-3.1.5, respectively.

555-2.5 AQUEOUS FILM FORMING FOAM SERVICE OUTLETS

555-2.5.1 GENERAL. In addition to the fixed AFFF sprinkling systems, the high capacity AFFF stations supply various 1-1/2 and 2-1/2 inch AFFF hose stations. For example, all aircraft carrier hangar and flight decks are equipped with AFFF hose outlets. The hangar deck AFFF service outlets are located inside the hangar, on the

port and starboard sides, in the general vicinity of the injection station from which they are supplied. The AFFF service outlets for the flight deck are normally located on the gallery deck walkways.

555-2.5.2 SERVICE OUTLETS BELOW DECKS. AFFF service outlets installed for below decks use are equipped with a 1-1/2 inch hose (50 - 175 feet) and an AFFF nozzle. The flow rate setting for the 1-1/2 inch nozzle is 125 gpm (95 gpm in machinery spaces.)

555-2.5.3 SERVICE OUTLETS FOR FLIGHT DECKS. AFFF service outlets for flight decks are equipped with a 2-1/2 inch soft, cotton-jacketed hose (150 feet) and a 2-1/2 inch AFFF nozzle. The flow rate for the 2-1/2 inch AFFF nozzle is 250 gpm. In addition, a hard piped hose reel with 150 or 200 feet of 1-1/2 inch hard rubber hose equipped with a 125 gpm nozzle is located at each outlet.

555-2.5.4 SERVICE OUTLET OPERATION. The AFFF service outlet is actuated electrically from a pushbutton station.

555-2.6 AQUEOUS FILM FORMING FOAM SPRINKLER SYSTEMS

555-2.6.1 LOCATION, DESIGN, AND SUPPLY OF SPRINKLER SYSTEMS. Overhead sprinkler systems have been installed in hangars, tank decks, well decks, vehicle cargo holds, weapon elevator pits, and fuel pump rooms on many ships. Bilge sprinkler systems have been installed in machinery spaces. Ocean-going minesweeps are also equipped with overhead AFFF sprinkler systems in machinery spaces. There are two designs of sprinkler systems: total coverage and grouped. When the total coverage type system is activated, the entire area is sprinkled. The grouped systems allow selective sections to be sprinkled. Total coverage type is installed in smaller spaces where a fire would be expected to rapidly extend throughout, such as fuel pump rooms and bilge spaces. Group type systems are used in large areas, such as hangar bays. In hangar bays each sprinkler group is supplied from one AFFF riser on the port side and one on the starboard side. Check valves are installed to prevent back-flow in the risers. Each riser is sized to supply the entire demand of approximately 1000 gpm per group. The individual sprinkler groups are activated by OPEN/CLOSE electrical switches.

555-2.6.2 FLIGHT DECK SPRINKLING. The flight decks of aircraft carriers, LHA's, LHD's, LSD's and some other air capable ships are equipped with combination seawater washdown and AFFF firefighting systems. Information contained in this section pertains only to the use of the system for firefighting. The system affords the capability for remote operation and extinguishment of large, flammable liquid, flight deck fires.

555-2.6.3 FLIGHT DECK NOZZLES. The system uses two different nozzles, flush deck and deck edge.

555-2.6.3.1 Deck edge nozzles are installed along the port and starboard sides of the flight deck, except where they would be in the way of the aircraft elevators. Deck edge nozzles are intended to wet down the deck directly under aircraft parked around the flight deck edge.

555-2.6.3.2 These nozzles are arranged in zones. The deck edge nozzles alternate between straight stream and spray types and are installed to discharge through openings cut in the aircraft parking coaming. Where there is no parking coaming, the nozzles are mounted outboard of the flight deck. All deck edge nozzles are aimed 10 degrees above horizontal except in those areas of carriers where there is no deck-edge coaming (where the nozzles are mounted outboard of the flight deck, aimed 20 degrees above horizontal), and on the starboard deck edge of the weapons staging area (where the nozzles are aimed at 0 degrees above horizontal). Deck edge pro-

tection for the elevators is as follows: two deck edge nozzles are positioned at the forward end and two at the aft end of each elevator. The nozzles on both ends are aimed 30 degrees and 60 degrees from the deck edge and 10 degrees above horizontal.

555-2.6.4 FLIGHT DECK SPRINKLER DIAGRAMS. Panels with flight deck diagrams are installed in Pri-Fly (Primary Flight Control) and Nav-Bridge (Navigation Bridge). Each flight deck zone is shown on the diagram.

555-2.6.5 FLIGHT DECK SPRINKLER OPERATION. The pushbuttons on the panel located in the Pri-Fly and Nav-bridge allow control for seawater only, seawater and foam, or off.

555-2.6.5.1 Risers from the firemain loop on the damage control deck supply seawater for washdown zones.

555-2.6.5.2 Foam concentrate is injected into the water stream just downstream of the hydraulically operated seawater valve, usually in the 03 Level. The AFFF injection riser has a check valve at the top to prevent seawater from entering the injection riser.

555-2.6.5.3 The AFFF injection riser originates at the high capacity AFFF station on the damage control deck. The riser is fed by an injection pump which has a check valve located at its discharge. This check valve holds the AFFF in the riser. An altimeter gage is provided in the high capacity AFFF station to indicate the AFFF level in the riser.

555-2.6.6 COUNTERMEASURE WASHDOWN. Each washdown/firefighting zone supplies up to 1,000 gpm of seawater/ AFFF. Ships with combined flush deck and deck edge nozzles on the same zone have normally open cutout valves installed in the deck edge nozzle piping which are to be closed when the system is used for countermeasure washdown. Securing these valves allows contaminated particles to be washed overboard instead of toward the center of the flight deck. In some installations, the deck edge nozzles are part of the flush deck nozzle zone and thus are supplied from the same seawater and foam source. In others the deck edge nozzle zones are supplied separately from the high capacity AFFF stations.

555-2.6.7 FANTAIL SPRINKLER. Fantail overhead sprinkler systems are installed to protect the jet engine test facility in case of fire or crash. These systems may be separate from or combined with the after flight deck zone, controlled by pushbutton switches in the jet engine test stand in addition to Pri-Fly and Nav-Bridge.

555-2.6.8 WEAPONS STAGING SPRINKLING. The weapons staging areas adjacent to the island are sprinkled via deck edge nozzles supplied by a single speed pump system. Controls are in Pri-Fly, Nav-Bridge, Flight Deck Control, and on the fore and aft ends of the island.

555-2.7 AQUEOUS FILM FORMING FOAM SYSTEM ACTUATION CONTROLS

555-2.7.1 HIGH CAPACITY AFFF PROPORTIONING SYSTEM ACTUATION CONTROLS. For high capacity AFFF proportioning systems, there is an electrical pushbutton at each AFFF hose outlet. This is a single position pushbutton which activates the solenoid operated hydraulic pilot valves which in turn opens the AFFF station seawater supply control valve and the AFFF flow control valve, and actuates the electric motor on the AFFF pump. In the two speed pump foam system, pushing an **OPEN** button at an AFFF hose outlet activates the foam pump in low speed mode if the pump is not already in operation. Operating the pushbutton, charges the

risers with AFFF up to the hose valve. No **CLOSE** position is provided since the flow of AFFF can be stopped at the hose valve or the valve on the foam nozzle. This prevents inadvertent remote securing of the system while it is still in use.

555-2.7.2 SPRINKLER SYSTEM CONTROLS. On ships fitted with fixed AFFF sprinkler systems, **OPEN/CLOSE** switches are provided within the sprinkled space. The **OPEN** position activates the respective AFFF station seawater supply control valve, the AFFF line supply valve, the foam group control valves, and the electric motor on the foam pump. In the two speed foam pump system, the pump motor will start and run in the high speed mode. If already operating in low speed mode, it will switch to and run in high speed mode for large sprinkling systems. If the two speed pump motor is already running in the high speed mode, it will continue in this mode until all high rate demands are secured. The **CLOSE** switch position closes only the AFFF sprinkling group control valves and, if foam is being supplied from the two speed foam pump system, the securing of the last high rate demand on that particular system will cause the motor to switch to the low speed mode and run until secured locally. The AFFF hose station outlets remain operable until the AFFF pump is secured locally. Pushbuttons are enclosed in watertight boxes with hinged covers painted in red/green stripes.

555-2.7.3 MANUAL ACTUATION. The manual control knobs (T-handles), located on the solenoid mechanism at the AFFF stations can be used to activate the hydraulic control valves in the event of electrical failure in the pushbutton circuitry. AFFF pumps can also be started locally at the pump controller.

555-2.7.4 CONFLAGRATION STATION CONTROLS. In ships fitted with AFFF sprinkling systems and conflagration (CONFLAG) stations, the CONFLAG station within each bay will have **OPEN/CLOSE** switches for all foam groups in that bay. CONFLAG stations nearest the hangar division doors will include controls for all foam groups on each side of the door. The switches are installed on a panel arranged to conform to the position of the watchstander as he views the hangar or fueled stowage area.

555-2.7.5 FP-180 AND 12 GPM SYSTEM CONTROLS. In ships where the AFFF hose outlets and AFFF sprinkler systems are supplied from an FP-180 proportioner or 12 gpm pump, the proportioner may be fitted for operation in one of two ways:

a. Electrical pushbutton, similar to that of a high capacity AFFF station.

b. Seawater hydraulic control by use of a manual control valve.

555-2.7.6 AQUEOUS FILM FORMING FOAM POWER DISTRIBUTION SYSTEM. A power distribution system is provided for electrical control of the AFFF proportioning system. The electrical system is divided into several units, consisting of 2 to 21 distribution centers depending on the ship's size and class. Each distribution center is supplied power from the ship's service switchboards. Emergency power is supplied by means of electrically operated automatic bus transfer units. The distribution centers supply power for the operation of specific groups of solenoid operated valves, motor controllers, etc. Dedicated power panels are used for each AFFF station. Power is supplied from different generators for AFFF stations which supply contiguous foam sprinkling groups.

555-2.7.7 ROOT VALVES. Root valves in the firemain branches to the AFFF proportioner stations are classified WILLIAM and shall be kept open at all times. The root valves are equipped with a nonpadlocking device. The valves are only closed to isolate damage, make repairs to the system, or to perform planned maintenance. When the station is manned, the watchstander should check all valves, instruments, and controls to determine that the station is READY.

555-2.7.8 TELEPHONES. Each AFFF hose outlet on a given riser is connected to the proportioner station by the X50J soundpowered telephone circuit.

555-2.7.8.1 A bell switch may be provided at each outlet for ringing the injection station to man up the X50J. The CONFLAG control station can call each AFFF proportioning station supplying outlets in the same or adjacent hangar bays by means of a selector switch. The JZ circuits have been extended in order to place one outlet in the same watertight compartment with the AFFF proportioning station to provide a means of calling Damage Control Central. Soundpowered headsets also are available to the watchstander which makes for quicker response should local action at the station be required.

555-2.7.9 MAINTENANCE OF AQUEOUS FILM FORMING FOAM SYSTEMS. It is imperative that all AFFF system equipment and components be in functional condition when an emergency arises. Current PMS requirements and technical manuals provide step-by-step procedures for maintaining shipboard AFFF systems and components. Specific maintenance requirements and periodicities are provided on MRC's.

555-2.7.10 HYDROGEN SULFIDE IN AFFF SYSTEMS

555-2.7.10.1 Health and Safety Hazards of Hydrogen Sulfide. Hydrogen sulfide (H_2 S) is a naturally occurring gas which produces a rotten egg smell at trace and low concentrations (below the recommended exposure limit of 10 ppm). At higher concentrations (above 100 ppm) or after longer periods, the nose can become fatigued and the smell is no longer detected. The disappearance of H_2 S odor indicates the area is either free of the gas and safe, or that the concentration exceeds toxic levels and is immediately dangerous to life. The nose provides a reliable first warning of a potential hazardous H_2 S condition, but only a H_2 S gas analyzer can reliably determine whether a space is safe. The nose may also mistake other odors such as sour bilge water for H_2 S. Brief exposures to hydrogen sulfide at these higher concentrations can cause sickness and death. Measurements of hydrogen sulfide concentrations in working areas near the point of discharge of AFFF solution have been greater than 100 ppm which is considered immediately dangerous to life or health. Personnel are at risk in the vicinity of the point of discharge during AFFF system operation or maintenance, particularly in poorly ventilated spaces. Space concentration monitors may not provide adequate protection since the concentration can vary significantly throughout the space and the concentration near the point of discharge may be much greater than the measurement of the general space concentration.

555-2.7.10.2 Mechanism of Hydrogen Sulfide Formation. The potential for hydrogen sulfide formation exists in stagnant premixed solutions of seawater and AFFF concentrate due to the activity of sulfate reducing bacteria (SRB) in stagnant, oxygen depleted waters. The activity of SRB that are present in firemain systems is stimulated by nutrients in AFFF concentrate. Hydrogen sulfide does not form at all locations in the AFFF solution piping. It is not possible to predict if hydrogen sulfide will be released using existing shipboard instrumentation before the AFFF solution is discharged. Measurements have shown that dangerous concentrations of hydrogen sulfide can accumulate inside AFFF piping within a one month period following system operation and that the discharge of small volumes of AFFF solution (a couple of gallons) can result in dangerous concentrations near the point of discharge. Hydrogen sulfide does not form in dry open AFFF piping such as sprinkler systems downstream of the control valve, in AFFF concentrate tanks and pipes, in AFFF containers or in portable AFFF fire extinguishers which contain a concentrate and potable water mix. Hydrogen sulfide does not form during short term mixing such as use of installed or portable AFFF eductors.

555-2.7.10.3 Safety Guidance During Maintenance and Testing of AFFF Systems

a. Space ventilation shall be operating.

b. If H_2 S odor is detected, work should stop, all personnel should leave space, and the discharge shall be reported to Engineering Officer of the Watch (EOOW), DCA or appropriate authority.

c. The gas free engineer shall survey the space to identify respiratory protection requirements prior to reentry by personnel. Personnel performing maintenance should wear respiratory protection when the concentration of hydrogen sulfide is greater than 10 ppm in the work area (within one foot of the point of discharge) in accordance with **NSTM Chapter 074 Volume 3** .

d. The gas free engineer may specify portable ventilation to assist in ventilating the work area in accordance with **NSTM Chapter 074 Volume 3** .

e. Personnel should wear OBA or SCBA respiratory protection when conducting tests or maintenance within spaces suspect of high H_2 S gas concentrations. Spaces with high hazard potential include small volume fuel pump rooms, poorly ventilated areas, restricted egress spaces, and locations where H_2 S was previously detected.

f. Flushing of AFFF solution pipes provides a temporary (weeks to months) mitigation of H_2 S hazards.

555-2.7.10.4 Safety Guidance When H_2 S Odor is Detected During Emergency Operation of AFFF Hoses or Sprinklers.

a. Personnel not wearing OBA or SCBA respiratory protection should immediately exit the space.

b. Overboard exhaust ventilation of the space shall be initiated in a timely manner.

WARNING

Immediate egress is the only sure safety action for personnel not wearing OBA or SCBA respiratory protection.

555-2.8 OPERATION, DESCRIPTION, AND SAFETY OF INSTALLED CARBON DIOXIDE SYSTEMS

555-2.8.1 GENERAL. There are two types of installed carbon dioxide (CO_2) systems on US Navy ships, total flooding systems and CO_2 hosereels. The CO_2 total flooding system is normally manually actuated except in a few special applications when it is automatically actuated by detection of heat, flame, or smoke. The operation of the CO_2 hose reel is entirely manual. To minimize potential for hot surfaces and reflash of fire during desmoking efforts, it is important to operate CO_2 systems without delay. See paragraph 555-3.2 for more information.

555-2.8.2 HEALTH AND SAFETY HAZARDS OF CARBON DIOXIDE

555-2.8.2.1 General. Carbon dioxide (CO_2) is a colorless, odorless gas that is naturally present in the atmosphere at an average concentration of 0.03 percent. It is used for extinguishing fires since it reduces the concentration of oxygen in the air to the point where combustion stops. Typically, CO_2 concentrations of 30 to 70 percent are required to extinguish fires.

a. Carbon dioxide for fire fighting is maintained as a liquid at high pressure. The CO_2 total flooding system is normally manually actuated except in a few special applications when it is automatically actuated by detection of heat, flame, or smoke. Upon actuation, the pressurized CO_2 storage cylinders discharge through piping and nozzles into the protected space. When discharged into the space, a large portion of the liquid CO_2 flashes to vapor, and the rest is converted to fine dry ice particles (snow) at a temperature of -109°F (-78°C). This dry ice gives the discharge a white or cloudy appearance. The low temperature condenses water in the entrained air creating fog that will persist after the dry ice is evaporated. CO_2 is 1.5 times heavier than air, and will collect at low points. Until forced ventilation is provided, the CO_2 will remain in the protected space and may migrate to adjacent spaces, especially adjacent spaces at lower elevations than the protected space.

b. The primary hazard to personnel is death by asphyxiation. If carbon dioxide is breathed at the concentrations expected in CO_2 protected spaces (over 30 percent), loss of consciousness will occur in less than 16-35 seconds. Death can occur within minutes following unconsciousness. Tests indicate that CO_2 concentrations will reach dangerous levels in a space 10 seconds after start of discharge.

c. At lower CO_2 concentrations (7-10 percent) such as might occur in a space with leakage of CO_2 from a CO_2 protected space, an increased rate and depth of breathing will occur almost immediately. For example at three percent CO_2 concentration the breathing volume is approximately doubled, at five percent it is tripled and at ten percent, it is ten times what it is at a resting condition. At ten percent CO_2 concentration, loss of consciousness can occur in four minutes. At ten percent CO_2 headaches and vomiting in addition to the severe discomfort from hyperventilation will occur. Personnel who lose consciousness may be revived without permanent injury if they are immediately removed from the hazardous atmosphere and provided CPR, if necessary.

d. Tests have been performed on a Navy ship to assess conditions inside a space in which CO_2 from a total flooding system has been discharged. The results indicate that, within two seconds following actuation, visibility was obstructed with a white fog and the fog persists for about one minute. Within three seconds, the space was sufficiently over-pressurized to prevent a man from opening an access door that swings into the space. The carbon dioxide concentrations rapidly increase during the first thirty seconds of discharge, reaching their maximum values of 50-75 percent within one minute. Room temperatures drop to about 0°F (-18°C) in twenty seconds after start of CO_2 discharge. Room temperatures then return to normal within four minutes.

e. The over-pressurization of the space creates a particularly severe safety hazard for compartments with inward swinging doors. Tests showed that an inward swinging access door to the space that was opened about 1-3/8 inches, closed within a second following discharge; the same door opened by four inches did not swing closed and prevented the space from over-pressurizing. It is critically important to block open inward swinging doors when these spaces are occupied.

555-2.8.2.2 Areas Susceptible to CO_2 Leakage. There is the possibility that CO_2 will leak out of a CO_2 protected space after an accidental discharge and threaten personnel in the surrounding area. The principal concern would be spaces immediately outside the access to a CO_2 protected space, areas or spaces below the spaces immediately outside the access to a CO_2 protected space and areas around and below CO_2 cylinders located outside CO_2 protected spaces. CO_2 can be visualized as if it were water; it will spill out of open doors, flow horizontally along a deck and sink to the lower areas of a space. Flow out of a ventilation duct is expected to be negligible. CO_2 leakage into bilges of spaces after an accidental discharge should be anticipated. CO_2 leakage will also occur from a gas turbine module with the module door open or into vertical trunks below the access door to a CO_2 protected space. Ship personnel shall identify areas susceptible to CO_2 leakage for each CO_2 protected space for use in implementing safety precautions during maintenance work in paragraph 555-2.8.2.6.

555-2.8.2.3 Safety Precautions During Routine Work. There have been a few accidental discharges when personnel were inside CO_2 protected spaces performing routine work. The most hazardous situation is when person-

nel are inside a CO_2 protected space without a CO_2 system time delay. In this case, the access door shall be blocked open by a positive means, such as a C-clamp rigidly attached to the frame or door to provide a minimum opening of six inches. In addition, a danger placard shall be placed at each access to the CO_2 protected space instructing that the door be blocked open whenever the space is occupied. It should be verified that the CO_2 discharge alarm system is receiving electrical power, such as by observing that the power available light is on, before entering a CO_2 protected space.

a. There are no other special safety precautions required to protect personnel against accidental discharge of CO_2 total flooding systems when personnel are either in a CO_2 protected space, or in an area susceptible to CO_2 leakage, so long as the personnel are performing functions designated for the space and provided there is no physical contact with the CO_2 systems or the controls.

555-2.8.2.4 General Procedures During Maintenance Work. The following procedures shall be implemented when corrective or preventive maintenance work is done and the CO_2 total flooding system is functional, is being disabled or is being restored to service. The procedures apply when (1) the maintenance work is performed inside a space protected by a CO_2 total flooding system, or (2) the maintenance work is performed outside a space protected by a CO_2 total flooding system and the maintenance work is either on the CO_2 system or is in the immediate area of manual or electrical controls for the CO_2 system.

a. The Damage Control Assistant (DCA), the Engineering Officer of the Watch (EOOW), cognizant Department Head and the Officer of the Deck (OOD), when underway or the Command Duty Officer (CDO), Duty Engineer, cognizant Department Head, the Officer of the Deck and Damage Control Central, when in-port, shall be informed before the work starts and after it is completed. Medical personnel, if available, shall be informed and requested to be ready to respond immediately in case of an emergency.

b. Tag-out procedures in accordance with current shipboard instructions shall be implemented, including tag-out of all locations from which CO_2 discharge can be actuated.

c. The cognizant Division Officer shall verify that all ship maintenance personnel involved in maintenance on CO_2 total flooding systems meet the applicable Personnel Qualification Standards and that knowledgeable, qualified supervision has been assigned.

d. Any actuation of a CO_2 discharge alarm, either audible or visual, should be immediately investigated.

e. When corrective or preventive maintenance work is being done on the CO_2 system, normal space functions and other maintenance work shall not be permitted in the CO_2 protected space.

f. It should be verified that the CO_2 discharge alarm system is receiving electrical power, such as by observing that the power available light is on, before starting preventive or corrective maintenance on the CO_2 system.

555-2.8.2.5 Disabling. The period of time in which a CO_2 total flooding system is disabled with flammable material in the CO_2 protected space should be limited. Backup flammable liquid fire fighting capabilities (such as an AFFF hose or a seawater hose with a 5 gallon can of AFFF concentrate and a portable eductor) and fire watches shall be established during the period that a CO_2 system is disabled with flammable material in the CO_2 protected space.

a. CO_2 total flooding systems are disabled by removal of the discharge heads and removal of the CO_2 cylinder control heads, when installed. Protective covers are installed over the openings for the control and discharge heads to prevent foreign material from entering these ports. In addition, a cylinder valve cap is installed over the cylinder valve.

555-2.8.2.6 Safety Precautions During Planned and Corrective Maintenance. The safety precautions provided below are intended to protect personnel against accidental discharge of CO_2 total flooding systems. The safety precautions are mandatory when performing work (i.e., planned or corrective maintenance) on the CO_2 system during the period that the CO_2 system is functional, is being disabled, or is being restored to service. The principal concerns during maintenance are that the maintenance action may cause or contribute to accidental discharge and the maintenance personnel may not be capable of rapid escape because they are not familiar with escape paths. Safety precautions involving planned maintenance contained in the PMS cards take precedence over the precautions contained in this paragraph.

a. **Safety Precautions Inside the CO_2 Protected Space.** Safety precautions during work on the CO_2 system, including disabling it or restoring it to service, inside the CO_2 protected space with the CO_2 system functional are as follows:

1 A safety briefing for all personnel involved in the maintenance work, assigned as rescue personnel or at work in areas susceptible to CO_2 leakage shall be completed before the work is started. The briefing shall be in accordance with paragraph 555-2.8.2.7.

2 Verify that ventilation is in operation for CO_2 protected space.

3 Evacuate all personnel from the CO_2 protected space except those directly associated with the maintenance work. Evacuate all non-essential personnel from areas susceptible to CO_2 leakage.

4 An escape path from the CO_2 protected space and areas susceptible to leakage of CO_2 to a safe haven not susceptible to CO_2 leakage shall be identified. The door or hatch to the CO_2 protected space and from areas susceptible to CO_2 leakage shall be open and hatches or doors on the way to a well-ventilated space or to the weather shall be open. In addition, the door to the CO_2 protected space shall be blocked open by a positive means, such as a C-clamp rigidly attached to the frame or door to provide a minimum opening of six inches. Spaces with inward opening doors are being fitted with automatic door latch mechanisms as described in paragraph 555-3.2.1.12. An open door or hatch to the CO_2 protected space will provide an escape path for personnel and will allow direct communications between rescue and maintenance personnel and prevent the space from being overpressurized during discharge.

5 Temporary danger signs to warn personnel of the hazard and temporary warning signs to limit access to the CO_2 protected space and spaces susceptible to leakage of CO_2 shall be posted. Signs shall have lettering at least one inch high. Danger signs shall include the words ″DANGER - CARBON DIOXIDE GAS - WHEN ALARM SOUNDS - VACATE IMMEDIATELY.″ Signs shall be posted at the accesses to the CO_2 protected spaces, inside the protected space and inside all spaces susceptible to leakage of CO_2 .

6 All personnel in the CO_2 protected space shall wear operating breathing apparatus when disabling the CO_2 system or restoring it to service. Breathing apparatus is not required after the CO_2 system has been disabled.

7 All personnel in spaces susceptible to leakage of CO_2 shall have emergency escape breathing devices (EEBD's) immediately available.

8 Rescue personnel shall be assigned, equipped and located in accordance with paragraph 555-2.8.2.8. Rescue personnel shall maintain a count of personnel inside the CO_2 protected space.

b. **Safety Precautions Outside the CO_2 Protected Space.** Safety precautions during work on the CO_2 total flooding system, including disabling it or restoring it to service, outside the CO_2 protected space with the CO_2 system functional are as follows:

1 A safety briefing for all personnel involved in the maintenance work, assigned as rescue personnel or at work in areas susceptible to CO_2 leakage shall be completed before the work is started. The briefings shall be in accordance with paragraph 555-2.8.2.7.

2 Ensure ventilation is operating in the space in which the work is being performed.

3 Evacuate all personnel from the CO_2 protected spaces. Evacuate all non-essential personnel from areas susceptible to the leakage of CO_2 .

4 An escape path from the areas in which accidental discharge of CO_2 could occur and areas susceptible to leakage from accidental discharge of CO_2 to a safe haven not susceptible to CO_2 leakage shall be identified. The doors and hatches to the CO_2 protected space shall be closed. The doors or hatches in the escape path outside the protected space shall be open.

5 Temporary danger signs to warn personnel of the hazard and temporary warning signs to limit the access to the CO_2 protected space and spaces susceptible to leakage of CO_2 shall be posted. Signs shall have lettering at least one inch high. Danger signs shall include the words ″DANGER - CARBON DIOXIDE GAS - WHEN ALARM SOUNDS - VACATE IMMEDIATELY.″ Signs shall be posted at the accesses to the CO_2 protected spaces and inside all spaces susceptible to leakage of CO_2 .

6 All maintenance personnel working on the CO_2 system shall wear operating breathing apparatus when disabling the CO_2 system or restoring it to service. Breathing apparatus is not required after the CO_2 system has been disabled.

7 All personnel in spaces susceptible to leakage of CO_2 shall have EEBD's immediately available.

8 Rescue personnel shall be assigned, equipped and located in accordance with paragraph 555-2.8.2.8. Rescue personnel shall maintain a count of maintenance personnel working on the CO_2 system.

555-2.8.2.7 Safety Briefings. Safety briefings are required as part of the safety precautions specified above. Safety briefings should include the following information:

a. A discussion of the hazards involved should accidental discharge of CO_2 occur.

1 Personnel must not breathe CO_2 . Dizziness, increased respiration rate and headaches will occur at low concentrations and loss of consciousness will occur in less than 16-35 seconds at the concentrations expected after discharge of CO_2 to a protected space. Cardiac arrest will occur shortly after loss of consciousness. Serious and permanent injury to the brain can occur within 3-5 minutes after cardiac arrest unless the person is removed from the hazardous atmosphere and CPR is started.

2 Visibility is restricted by discharge of fine, dry ice particles and by condensation of moisture in the air by the cold CO_2 . Loss of visibility will occur within two seconds of start of discharge. Good visibility should return in about a minute.

3 Discharged CO_2 may migrate to areas outside the space in which it is discharged through leak paths, ventilation or open doors. It will tend to accumulate at low points in the space.

4 Within three seconds, the space into which the CO_2 is discharged will become pressurized. The pressure will be so high that an inward swinging door cannot be pulled open. Doors that swing outward may also be affected.

b. A discussion of how the system could be accidentally discharged during maintenance.

1 Pull-cable actuation systems can be actuated by any movement of the cylinder or of the pull cable. Discharges have occurred when the cylinder was rotated in its brackets, when personnel have accidentally fallen against the pull cable, when personnel were correcting problems with the pull cable actuating lever and when personnel were removing CO_2 cylinders.

2 Automatic CO_2 total flooding systems have been accidentally discharged by personnel attempting to do maintenance on seawater sprinkling system controls, but actually working on similar components in the CO_2 system.

3 CO_2 cylinders have been dropped during their movement in and out of space. The discharge heads were damaged and CO_2 was discharged.

4 While personnel were trying to remove the cylinder control head protective cage, their efforts rotated a cylinder in its bracket, putting tension on an actuation cable, resulting in accidental discharge of CO_2 .

5 Inadvertent actuation could occur in the process of removing and installing discharge and control heads.

PMS procedures must be carefully followed to avoid discharge during this maintenance procedure. Even with the discharge head removed, CO_2 can discharge from a single cylinder through the control head pilot port.

c. A discussion of where CO_2 might migrate after discharge and precautions taken to protect personnel located in these areas.

1 Temporary warning and danger sign locations, the areas required to be evacuated and the location of EEBD's in these areas should be discussed.

d. A discussion of the safety precautions required to protect and rescue personnel.

1 A description of the alarms and time delay settings should CO_2 discharge occur.

2 A description of the planned escape path to a safe haven and drill to verify that escape can occur during the discharge time delay period.

3 A discussion of the requirement to open doors to the protected space and to block open the door to the protected space by a positive means, such as a C-clamp rigidly attached to the frame or door. Also, include reasons for the open door, i.e., it provides an escape path for personnel in the space, it provides access and visibility for rescue personnel and it prevents space over-pressurization.

4 Breathing apparatus requirements for assigned rescue and maintenance personnel and proper procedures for use of the breathing apparatus.

5 A description of posted warning signs and limited access requirements.

6 A description of communications required to be used by assigned rescue personnel.

e. A discussion of actions to be taken by maintenance personnel should accidental discharge occur.

1 Do not breathe CO_2 .

2 Exit space.

3 Proceed to safe haven.

f. A discussion of actions to be taken by rescue personnel should accidental discharge of CO_2 occur.

1 Inform DC Central, Main Control, Quarterdeck or Bridge of emergency and request assistance, including medical assistance.

2 Help maintenance personnel escape.

3 Count personnel leaving area to assure all personnel have departed.

4 Search for personnel who have not departed and assist them to escape.

5 Verify that space into which CO_2 is discharged is free of personnel and then close the access door or hatch to reduce spread of CO_2 to other areas of the ship or space.

6 Proceed to safe haven.

7 Perform CPR on any personnel that require help until assistance arrives.

8 Report status of escape to operating station.

9 Start ventilation to space.

g. A discussion of actions to be taken by personnel in area susceptible to CO_2 leakage should accidental discharge of CO_2 occur.

1 Proper procedures for use of the EEBD's.

2 Don EEBD's and escape to a safe haven.

555-2.8.2.8 Rescue. Rescue personnel are provided to assist maintenance personnel to escape should an accidental discharge of CO_2 occur. Safety precautions, if followed, will protect personnel from all anticipated causes

of CO_2 discharge. Rescue personnel may be needed if a person in the space is unable to escape for reasons such as failure of his breathing apparatus, injury or failure to follow safety precautions. As discussed in paragraph 555-2.8.2.1.b, if a person breathes CO_2 at fire extinguishing concentrations, he will lose consciousness in less than 16-35 seconds, cardiac arrest will occur within seconds depending on the individual and permanent injury to the brain can occur within 3-5 minutes after cardiac arrest unless CPR is started. An additional factor in the rescue is the poor visibility from the CO_2 discharge that persists for about a minute after completion of discharge.

The requirements for the rescue team are as follows:

a. A minimum of two rescue personnel shall be assigned. Additional personnel should be assigned when more than four maintenance personnel are present using a ratio of one rescue person for each two maintenance personnel.

b. The rescue personnel shall be located at or near the access to the CO_2 protected space in which the maintenance work is being performed or in the area in which work is being done outside the CO_2 protected space and shall be positioned such that maintenance personnel and space or area conditions can be monitored.

c. One rescue person shall have communications, such as WIFCOM or sound powered phone, with a manned location such as D.C. Central, Main Control, the Quarterdeck or the Bridge.

d. Assigned rescue personnel shall wear operating breathing apparatus with voice amplifiers.

e. Assigned rescue personnel shall be capable of providing cardio-pulmonary resuscitation (CPR).

555-2.8.3 CARBON DIOXIDE TOTAL FLOODING SYSTEM. A typical CO_2 total flooding system is shown in Figure 555-2-10. The carbon dioxide total flooding system has also been referred to as a carbon dioxide fixed pipe system.

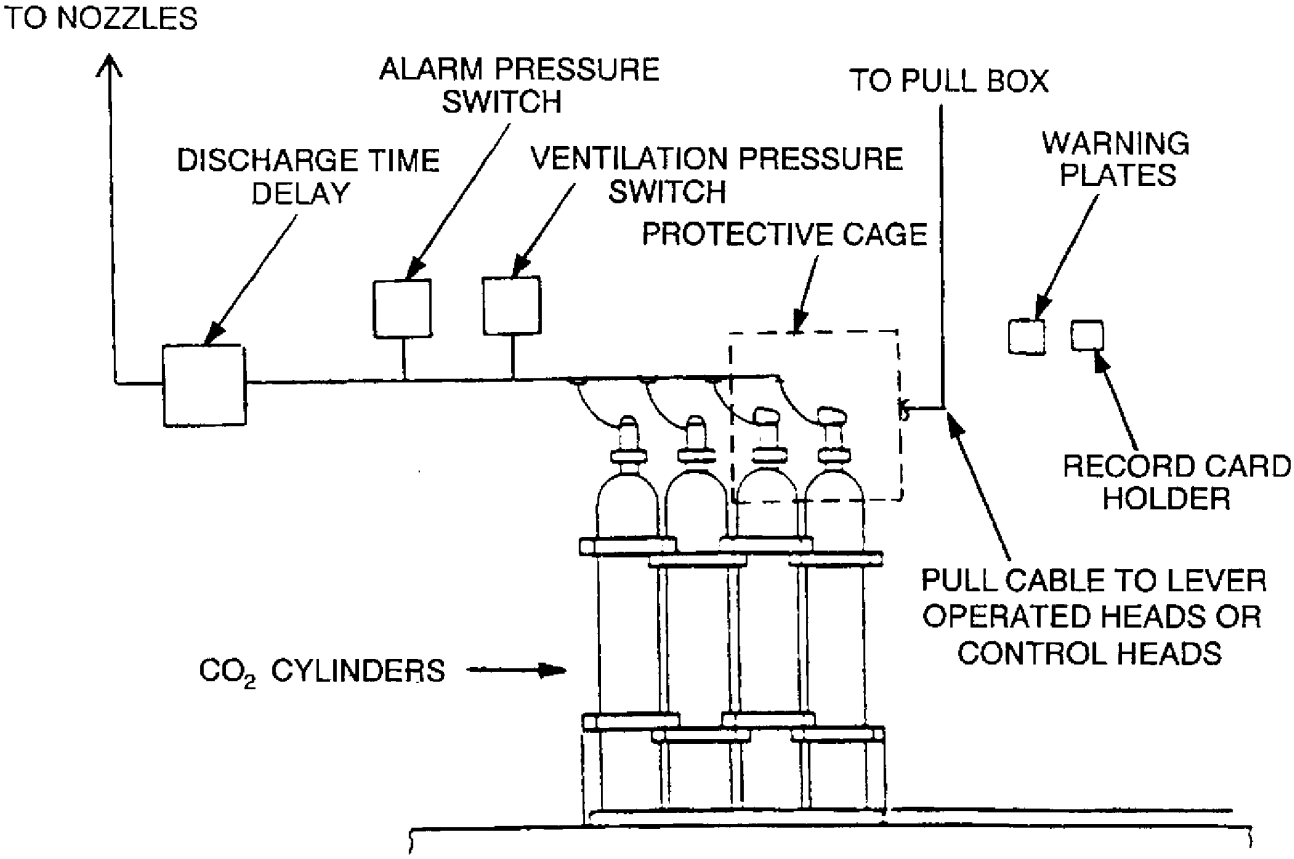

Figure 555-2-10 Typical Carbon Dioxide Total Flooding System

555-2.8.3.1 Remote Actuation. In the CO_2 total flooding system the discharge head is fitted with a remotely operated actuation (see paragraph 555-3.2.1.7). The remote actuation is activated by a cable connected to a pull box handle. After the operator releases the latches of the pull box, opens the door, breaks the glass, and pulls the handle, the cable operates the remote actuation which depresses the piston in the discharge head and discharges the CO_2 .

555-2.8.3.2 Pressure Operated Switch. The CO_2 total flooding system also uses a pressure operated pneumatic switch (see paragraph 555-3.2.1.7). The pneumatic switch is connected to the gas distribution piping and actuates an audible alarm and shuts off the ventilation system prior to CO_2 system discharge.

555-2.8.3.3 Discharge Time Delay. All CO_2 total flooding systems are required to be equipped with a discharge time delay unit. This device, in conjunction with the audible alarm, warns personnel of pending discharge and allows time for safe evacuation.

WARNING

Unless proper precautions are taken, a high concentration of CO_2 will cause suffocation. The compartment shall not be entered without either respira-

Warning - *precedes*

tory protection [breathing apparatus or hose mask] or until ventilation has been restored for at least fifteen minutes.

555-2.8.4 CARBON DIOXIDE HOSE REEL SYSTEM. CO_2 hose reel systems are provided only in nuclear ship main machinery spaces for electrical fires. The typical CO_2 hose reel configuration is described in paragraphs 555-3.2.2 through 555-3.2.3.2. The following describes the CO_2 hose reel operation.

555-2.8.4.1 To operate the CO_2 hose reel, proceed with the following steps.

1. To discharge the CO_2 , pull out the locking pin and open the valve by pulling up the lever on the side of the discharge head, or by turning the hand wheel open or by pulling the remote pull handle (see paragraph555-3.2.2), as applicable.
2. Run the discharge horn to the point of attack on the fire.
3. Open the valve on the discharge horn by squeezing the valve lever.
4. Direct the gas at the base of the flame. As the flame recedes, follow slowly.
5. For switchboards, motors or other electrical fires, direct the gas into all openings on the burning equipment and continue to apply CO_2 after the flame has been extinguished until the burned substance is coated with snow. This procedure will cool the burned material and prevent any incandescent particles from reigniting.
6. To temporarily stop flow of gas, release the squeeze lever on the discharge horn valve.
7. When the first cylinder is empty, close the valve by the reverse of step.
8. For additional gas, operate the next cylinder as in steps 1 and 3.
9. After the fire has been extinguished, shut off the cylinder valves and open the valve on the discharge horn by squeezing the valve lever to be sure all pressure is relieved from the hose.
10. Remove the empty cylinders and have them recharged or replaced immediately.
11. Rewind hose on the reel and replace discharge horn to clip. The horn valve shall be left in its closed position.

555-2.9 OPERATION AND DESCRIPTION OF HALON SYSTEMS

555-2.9.1 HALON 1301 SYSTEMS. Halon 1301 systems may be installed in Main Machinery Rooms, Fire Rooms, Engine Rooms, Auxiliary Machinery Rooms, Fuel Pump Rooms, Ship Service or Emergency Generator rooms, Auxiliary Boiler Rooms, Main Propulsion or Generator Engine Modules, Helicopter Recovery Assist, Securing, and Traversing (RAST) Machinery Rooms, Tactical Towed Array Sonar (TACTAS) Handling Rooms, and in spaces where flammable liquids are stored or issued. In Aircraft Carriers, gas powered bomb hoist storerooms may be protected by Halon 1301. Halon systems utilize one or more cylinders containing Halon 1301 in a liquid form. The function of the system is to extinguish fires which are beyond first aid extinguishing apparatus, and where abandonment of the space is necessary. See paragraph 555-3.3 for more information.

555-2.9.1.1 Components. Each system will consist of Halon 1301 cylinders, 5 lb. CO_2 actuators, vent fittings, flexible actuation hoses (which are being replaced with 1/4-inch Cu-Ni tubing connections with a 4″ loop), flex-

ible discharge hoses, check valves, a time delay device, time delay device bypass valve, CO_2 actuation system piping, pressure switches, Halon discharge piping, discharge nozzles, in-line filter, and various electrically operated alarms and indicators.

555-2.9.1.2 Location. The usual location for Halon cylinders is inside the protected compartment; however, they may be located outside, or in a Halon cylinder room. Each system is designed such that a single discharge of Halon 1301 will provide a concentration of 5 to 7 percent Halon 1301 by volume in air throughout the protected space. Sufficient Halon is required so that the concentration will remain at a minimum of 5 percent for 15 minutes. Some Halon protected spaces have a duplicate reserve Halon system to supplement the primary one. Each Halon fixed flooding system is designed to completely discharge the Halon 1301 gas into the protected space within 10 seconds following the start of the discharge.

555-2.9.1.3 Installation Requirements. Halon system standard requirements are provided in NAVSEA standard drawings 803-5773930 and 803-5959326. Halon 1301 fixed flooding system components usually are in accordance with MIL-E-24572, and are discussed in paragraph 555-3.3.

555-2.9.1.4 Halon 1301 System Types. The Halon 1301 system consists of one or more cylinders piped to discharge nozzles located at the overhead of each level. In spaces with obstructions or very high overheads, nozzles may also be placed at intermediate levels. Cylinders may be arranged in banks with common piping leading to multiple nozzles, or may be of a modular type with cylinders located throughout the protected space, with separate piping from each cylinder to a discharge nozzle. Modular systems and banked systems are depicted in Figure 555-2-11 and Figure 555-2-12, respectively.

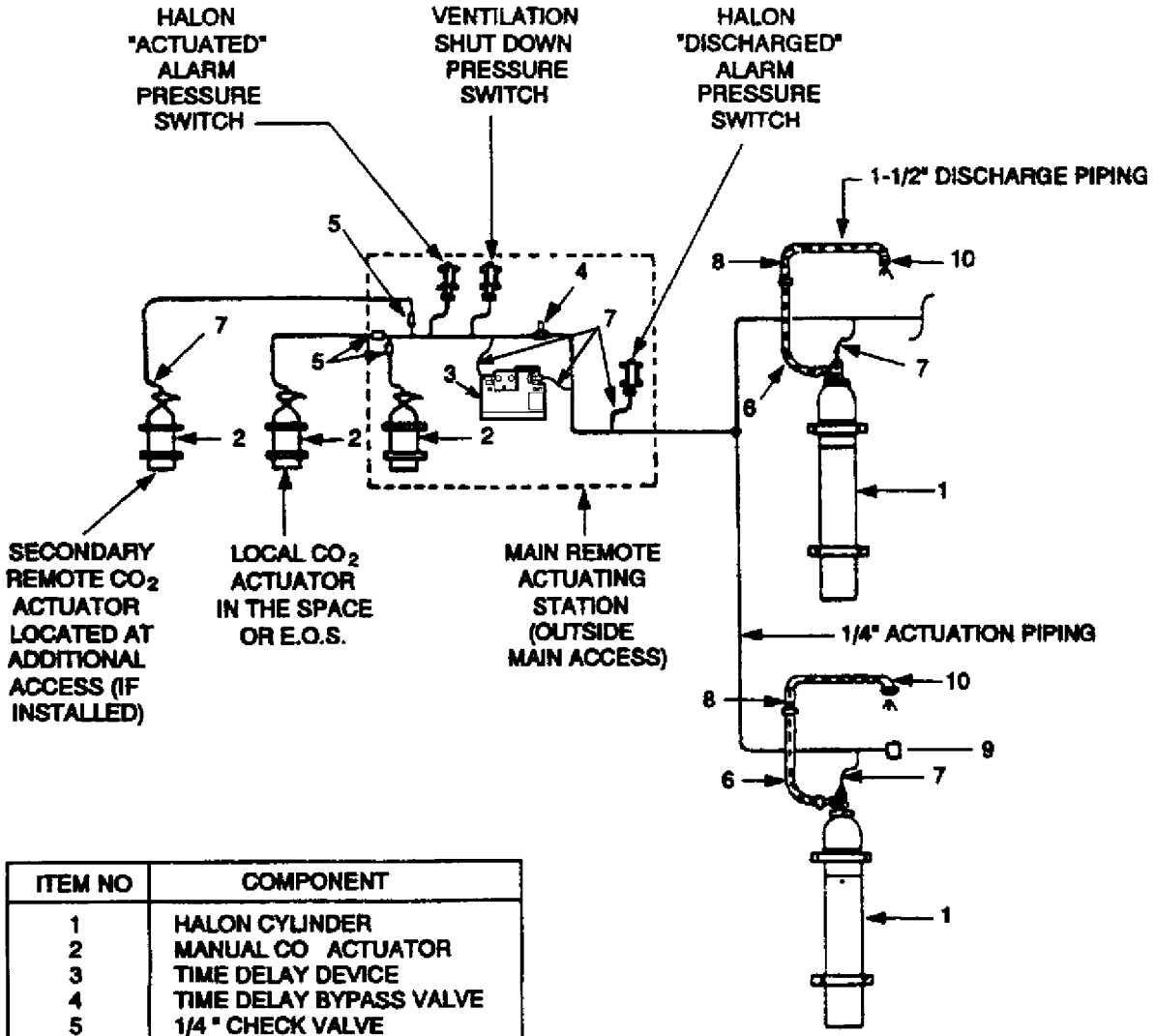

ITEM NO	COMPONENT
1	HALON CYLINDER
2	MANUAL CO ACTUATOR
3	TIME DELAY DEVICE
4	TIME DELAY BYPASS VALVE
5	1/4 " CHECK VALVE
6	1-1/2 " FLEXIBLE HOSE
7	1/4 " FLEXIBLE HOSE
8	1-1/2 " ADAPTER
9	VENT FITTING
10	DISCHARGE NOZZLE

——— = CO_2 FLOW

..... = HALON FLOW

NOTES:

1. 1/4" ADAPTER FITTINGS ARE NOT SHOWN. LOCATION IS BETWEEN 1/4" PIPING AND 1/4" FLEXIBLE HOSE (7).
2. QUANTITY AND SIZE OF HALON CYLINDERS VARIES FOR EACH INSTALLATION.

Figure 555-2-11 Typical Halon 1301 Modular System Configuration

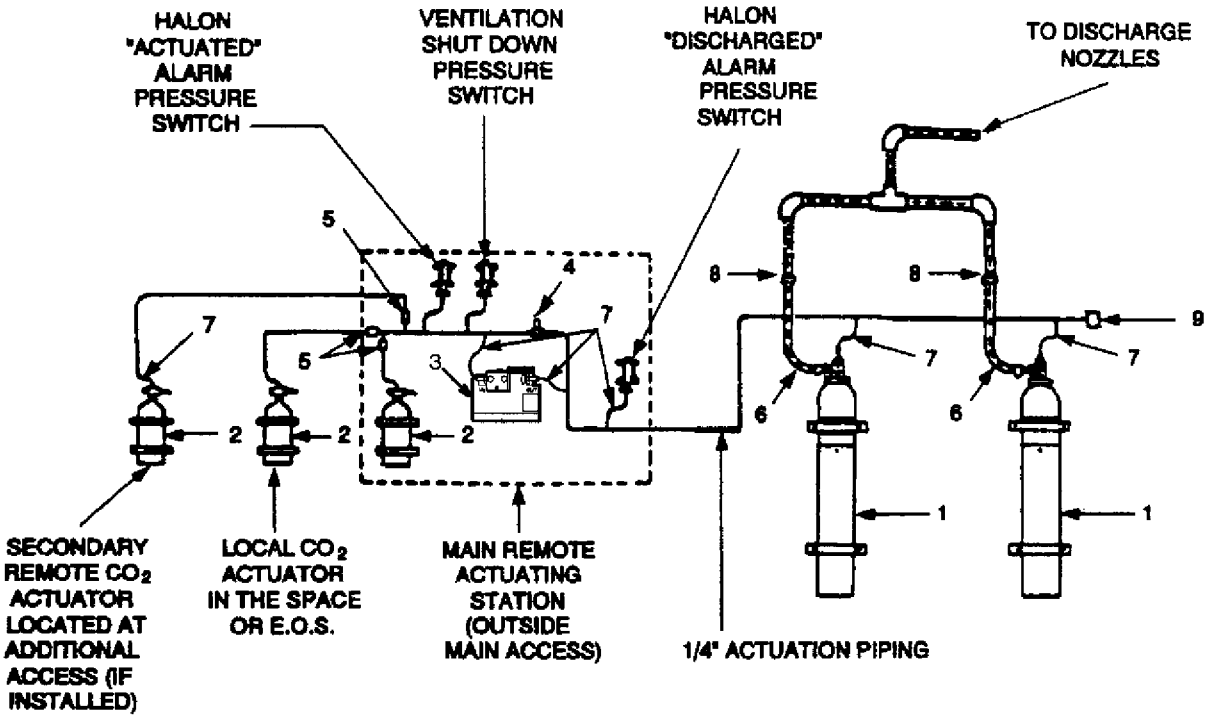

ITEM NO	COMPONENT
1	HALON CYLINDER
2	MANUAL CO ACTUATOR
3	TIME DELAY DEVICE
4	TIME DELAY BYPASS VALVE
5	1/4 " CHECK VALVE
6	1-1/2 " FLEXIBLE HOSE
7	1/4 " FLEXIBLE HOSE
8	1-1/2 " CHECK VALVE
9	VENT FITTING

NOTES:

1. 1/4" ADAPTER FITTINGS ARE NOT SHOWN. LOCATION IS BETWEEN 1/4" PIPING AND 1/4" FLEXIBLE HOSE (7).
2. QUANTITY AND SIZE OF HALON CYLINDERS VARIES FOR EACH INSTALLATION.
3. 1-1/2" CHECK VALVE MAY NOT BE INSTALLED WHEN THERE IS ONLY ONE CYLINDER.

——— = CO_2 FLOW

..... = HALON FLOW

Figure 555-2-12 Typical Halon 1301 Banked System

555-2.9.1.4.1 Machinery Spaces Vs. Non-Machinery Spaces. Halon systems in machinery spaces (Main Machinery Rooms, Fire Rooms, Engine Rooms, Auxiliary Machinery Rooms) will have 60-second time delays. If the Halon system has been installed during ship construction, it will have both primary and reserve Halon systems. Systems that have been installed by a SHIPALT will usually have only a primary Halon system. In compartments other than Machinery Spaces, Halon systems usually have a 30-second time delay, and only a primary Halon system. Engine enclosures or modules have a 30-second time delay for both primary and reserve Halon systems.

555-2.9.1.5 System Actuation. Each system is usually provided with more than one actuator. Actuators may be installed within the Halon protected area, in an Enclosed Operating Station (EOS), or outside and adjacent to each main access to the space.

555-2.9.1.6 Additional Features. Additional features include automatic ventilation shutdown, actuation of local and remote predischarge alarms, manual time delay bypass, automatic ventilation closures (if installed) and Halon discharged indicator light.

555-2.9.1.7 Supplemental Systems. Halon 1301 systems in machinery spaces and pump rooms are normally supplemented by an AFFF bilge sprinkling system. The AFFF bilge sprinkling system, where installed, should be actuated at the same time as the Halon system. AFFF bilge sprinkling systems are not installed if the bilge is too shallow.

555-2.9.1.8 Inadvertent Operation. If the Halon system is inadvertently operated when there is no fire, the space should be evacuated, if possible, to avoid hazards described in 555-1.12.7.6. Ventilation should be restored as soon as possible.

555-2.9.2 SYSTEM OPERATION. Using Figure 555-2-13 as a guide, normal operation of the system may be accomplished by performing the following actions.

1. Break the glass or open the enclosure at remote actuating stations. Remove the safety pin, which is secured by a lead and wire seal.
2. Fully operate the discharge lever and secure in the operated position. The released CO_2 will immediately actuate two pressure switches. One pressure switch operates lights and horns (or bells) within the space, and a bell and amber system actuated light outside the space at actuating stations and space accesses. The other pressure switch will initiate shut down of ventilation fans and operate any installed vent closures.
3. If alarms do not operate, or ventilation does not shut off, pull out the reset/actuation knob on the associated pressure switch. If operation still does not occur, manually shut off ventilation systems, and pass the word to evacuate the space.
4. After the time delay operates, the CO_2 pressure will operate the Halon cylinder valves to discharge Halon to its associated nozzles. A third pressure switch downstream of the time delay device will then actuate a red light indicating Halon discharge.
5. In the event the timing of the time delay device exceeds 70 seconds (for a 60-second device), or 35 seconds (for a 30-second device), the time delay should be bypassed by opening the time delay bypass valve.

NOTE

The time delay bypass valve should not be operated until after the full delay time (30 or 60 seconds has passed).

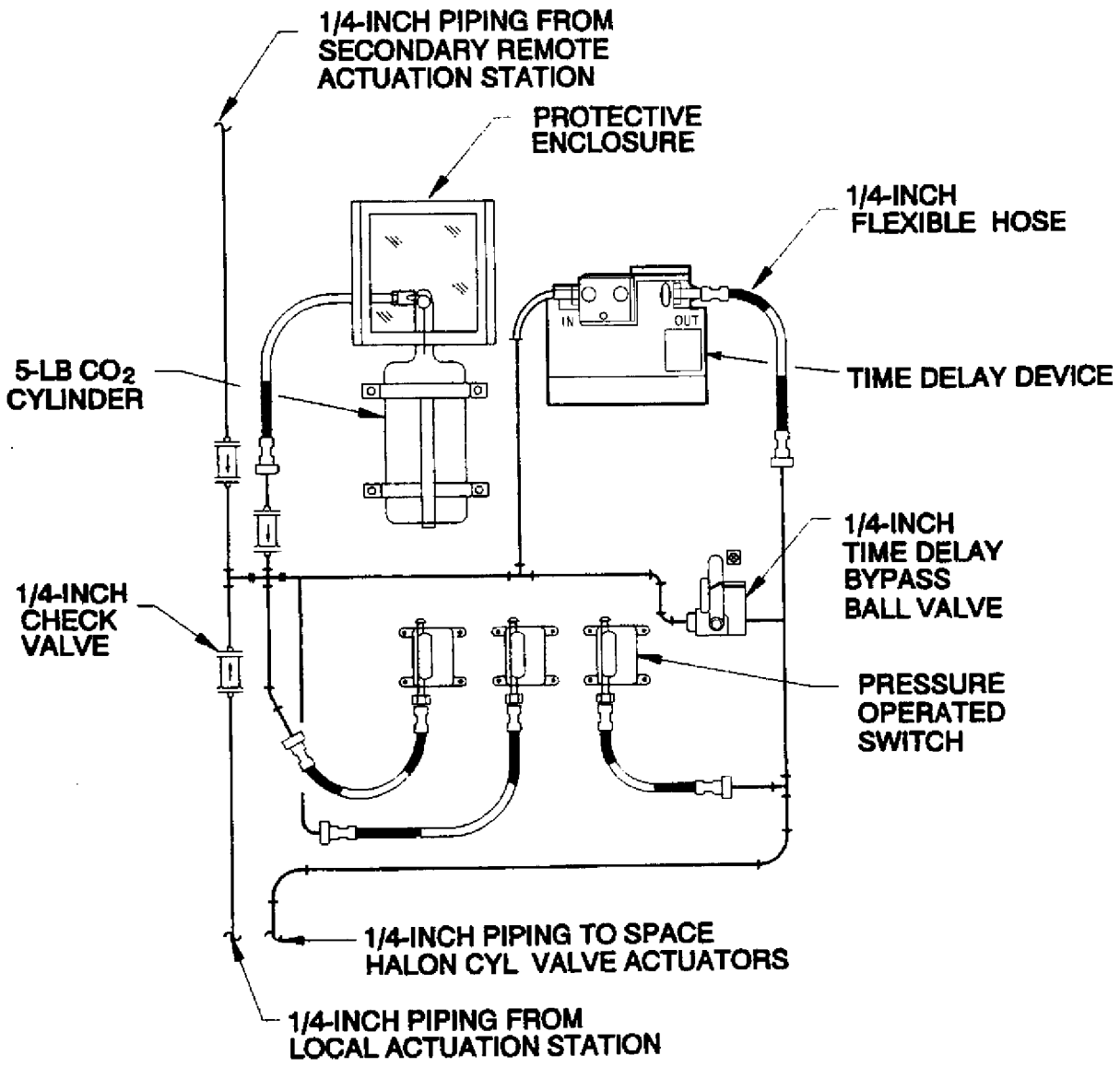

Figure 555-2-13 Typical Halon 1301 Actuating Station

555-2.9.3 OTHER FEATURES OF HALON SYSTEMS

555-2.9.3.1 Cylinder Handling System. A Halon cylinder handling system is provided to remove expended Halon cylinders and replace them with fully charged cylinders. This system provides a means for lifting the expended cylinders from their position and transferring the cylinders to be replaced. Attachments to the cylinder valve cap or neck, for lifting the cylinders, are not permitted.

555-2.9.3.2 Recharging Halon Cylinders. Halon 1301 cylinders are not recharged aboard ship. Replacement of discharged cylinders is handled through the supply system (see paragraph 555-1.12.7.7).

555-2.9.3.3 Recharging Actuator Cylinders. CO_2 actuator cylinders may be recharged using the same methods and equipment as described for recharging 15-pound portable CO_2 extinguishers, except that an additional adapter is needed (see paragraph 555-4.2.6).

555-2.10 SPRINKLER SYSTEM DESCRIPTIONS

555-2.10.1 PURPOSE. The current method for protecting munitions from fire is the magazine sprinkler system. The primary purpose of this system is to prevent a dangerous rise of temperature within the magazine due to a fire in other compartments, and secondarily, to extinguish incipient fires within the magazine involving high flash point flammable liquids or ordinary combustibles. With few exceptions, the system was not designed nor tested to extinguish or control burning explosives or propellants. These materials typically have their own oxidizers and burn at extremely high temperatures; in some cases underwater.

555-2.10.2 ADDITIONAL REFERENCE. The sprinkling systems discussed in the subsequent sections are provided for personnel familiarity on what is available for magazine sprinkler systems only. For a detailed discussion on components and operation, see NAVSEA S9522-AA-HBK-010, **Description, Operation and Maintenance Handbook for Magazine Sprinkler Systems** (supersedes NAVSEA 0348-LP-078-1000).

555-2.10.3 DESCRIPTION OF DRY TYPE MAGAZINE SPRINKLER SYSTEMS (SEAWATER ACTUATOR). This system utilizes seawater from the firemain for the operating pressure to actuate or secure the magazine sprinkler system. The dry type magazine sprinkler system does not contain seawater in the sprinkler pipe downstream of the magazine sprinkler valve when the system is inactive (in standby).

555-2.10.3.1 Operating Stations. The magazine sprinkler system may be operated from a local operating station inside or immediately adjacent to the protected compartment, or from a remote operating station located on the damage control deck. One manual control valve is installed at the local operating station. The remote operating station manual control valve may be installed as a solitary valve or it may be installed in a bank at some central location.

555-2.10.3.2 Operating Pressure Circuit. The operating pressure circuit connects the necessary control valves to the magazine sprinkler valve which provides control of the seawater to the sprinkler heads in the protected compartment.

555-2.10.3.3 Actuation. Actuation of the system opens the magazine sprinkler valve, providing flow of seawater through the sprinkler heads, cooling the munitions and structures.

555-2.10.4 DESCRIPTION OF WET TYPE MAGAZINE SPRINKLER SYSTEM (SEAWATER ACTUATOR). The hydraulic control system permits rapid actuation of the wet type magazine sprinkler system (see paragraph 555-3.4.6). The wet type magazine sprinkler system is designed to sprinkle the protected space approximately one second after actuation. The rapid response time is obtained because the sprinkler system piping between the downstream side of the magazine sprinkler valve and the sprinkler heads are filled with fresh water which is released as soon as the system is actuated. The fresh water is maintained under a gravity head provided by an accumulator tank located in a compartment above the protected space. The sprinkler heads are held closed by fresh water under 50 psig pressure from a pressurized accumulator tank which is also located in a compartment above the protected space. When the control system is actuated, the pressure holding the sprinkler head valves closed is released and the magazine sprinkler valve is opened, thereby providing the flow of seawater through the sprinkler heads, cooling the munitions and structures.

555-2.10.5 DESCRIPTION OF AUTOMATIC CONTROL SYSTEM. The automatic control system is designed to actuate the magazine sprinkler system in response to either a rapid rise in temperature or a slow rise

to a fixed temperature in the protected space. The automatic control system is installed as an adjunct to the hydraulic control systems for wet or dry type magazine sprinkler systems.

555-2.10.5.1 The automatic control system consists of heat sensing devices (HSD's) and a pneumatically released pilot (PRP) valve, used to detect a fire and provide automatic actuation of the sprinkler system.

555-2.10.6 DESCRIPTION OF MISCELLANEOUS SPRINKLING SYSTEMS. Miscellaneous sprinkling systems may be installed in certain spaces including incinerator rooms, dry stores cargo holds, storerooms, cargo holding areas, living spaces, aviation tire storerooms, flammable gas cylinder storerooms , lubricating oil storerooms, trash compactor rooms, paint spray rooms and paint spray booths, solid and plastic waste reprocessing rooms, rubber and plastic shops, and other high fire risk spaces. They are typically provided with a water switch (dry type system) or flow switch (wet type system) which sends a signal to a remote damage control panel when the system operates. A local audible alarm is not provided. They may also be installed around the perimeter outside of certain vital electronics spaces. Sprinkling control valves are manually operated local to the space protected and may also be provided with hydraulic control on the damage control deck. Miscellaneous sprinkling systems may be either wet type or dry type.

555-2.10.6.1 Dry Type Miscellaneous Sprinkling System. The dry type systems do not contain seawater downstream of the sprinkling control valve when the system is inactive. Systems are actuated manually by opening the sprinkler control valve, allowing seawater to flow to the sprinklers. Since the manual control valve is normally closed, ship's force must open the valve to operate the system. Sprinklers may be either open head or closed head. When closed head sprinklers are used, only those which are opened (fused) by heat from a fire will flow water. Flammable gas cylinder storeroom dry type sprinkler systems have open heads so that cooling water is applied to gas cylinders while the fire burns. This sprinkler system is not intednded to extinquish a flammable gas fire since extinquishment would create a more dangerous explosion hazard.

555-2.10.6.2 Wet Type Miscellaneous Sprinkling System. The wet type systems contain seawater throughout the piping down to the sprinkler heads. The sprinklers are closed head, and will actuate automatically when exposed to heat, typically at 160°F (71°C) or 175°F (79°C). The sprinkling control valve of a wet type system must remain open at all times except when performing maintenance or system tests.

555-2.11 OPERATION AND DESCRIPTION OF AQUEOUS POTASSIUM CARBONATE (APC) SYSTEMS

555-2.11.1 GENERAL. The Aqueous Potassium Carbonate (APC) Fire Extinguishing Systems are installed in navy ships to provide protection for galley deep fat and doughnut fryers and their exhaust systems. Aqueous potassium carbonate is specifically formulated to extinguish fire in the reservoirs by combining with the hot cooking oil surface to form a combustion resistant soap layer, thereby cutting off the grease from its source of oxygen. There is little or no cooling with APC. A typical APC Fire Extinguishing System is shown in Figure 555-2-14. For more information on the APC fire extinguishing system, see technical manual NAVSEA S9555-AR-MMO-010, **Fire Extinguishing System, Deep Fat and Donut Fryer** .

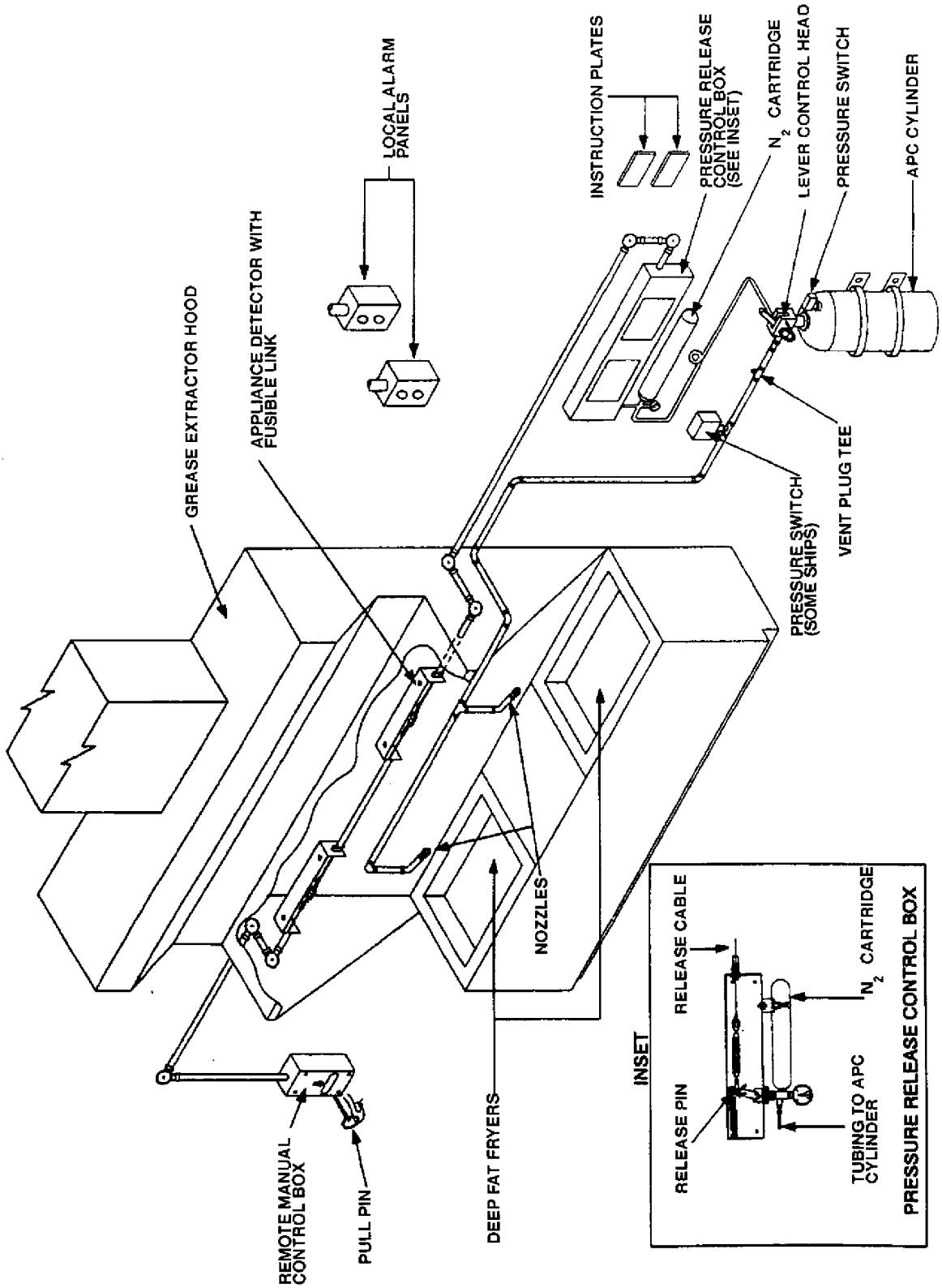

Figure 555-2-14 Aqueous Potassium Carbonate (APC) Fire Extinguishing System

555-2.11.2 DESCRIPTION. Each system includes one or two cylinders filled with a solution of potassium carbonate in water pressurized with compressed nitrogen (N_2). Discharge piping from the cylinder(s) leads to one or more nozzles which spray the solution into the cooking oil reservoirs, along the galley hood plenum or up into the galley hood exhaust duct. A spring tensioned cable keeps the system inactive. Releasing the tension in any of several ways, releases N_2 from a pressurized cartridge which opens the lever control heads which release the aqueous potassium carbonate. See paragraph 555-3.5.2 for a complete description of all components.

555-2.11.3 SYSTEM OPERATION. Operation of the fire extinguishing system, is normally fully automatic (see paragraphs 555-3.4.1 through 555-3.5.3.5). Manual backup modes of operation are provided at the cylinder assembly, pressure release control box, and the remote manual control box.

555-2.11.3.1 Automatic Operation. Excessive heat on one of the fusible links melts the link and releases the cable tension. The extension spring in the pressure control box pulls the lever which activates the pressure release cartridge. N_2 gas from the pressure release cartridge activates the lever control head(s), causing the cylinder(s) to discharge.

555-2.11.3.2 Manual Operation. The system has three manual modes of operation.

555-2.11.3.2.1 At the cylinder assembly, remove the release pin in the lever control head completely, and operate the lever. This discharges the cylinder directly.

555-2.11.3.2.2 At the pressure release control box, open the box and remove the release pin completely. This disconnects the release cable and allows the extension spring to activate the system as described under automatic operation.

555-2.11.3.2.3 At the remote manual control box, remove the release pin completely. This disconnects the anchored end of the release cable, releases the tension, and allows the extension spring to activate the system as described under automatic operation.

555-2.12 MSC SHIP FIREFIGHTING SYSTEMS AND EQUIPMENT

555-2.12.1 GENERAL. Military Sealift Command (MSC) ship firefighting systems and equipment comply with United States Coast Guard (USCG) commercial industry regulations. The exception is ships transferred from the Navy to MSC that retain Navy designed systems. Communication between ships engaged in firefighting assistance is important to exactly determine what type of equipment and systems the ship in distress has on board and what its needs are. This section will discuss foams, fittings, portable equipment, damage control lockers, and personnel. For more information, see Military Sealift Command Instruction COMSCINST 3541.2, **Damage Control Manual** .

555-2.12.2 FOAMS. MSC ships carry any of the USCG approved basic types of foam concentrate: Protein, Fluoroprotein, or commercial AFFF. The ships carry foam in fixed system storage tanks and in 5 gallon containers for use with portable equipment and refilling system tanks. In an emergency, Navy Mil Spec AFFF could be used with MSC fixed or portable equipment designed to proportion any type of foam at 6 percent. However, limited effectiveness should be expected when deviating from the design basis foam. MSC provided foam may be used on Navy ships with portable equipment. Limited success in using protein and fluoroprotein foam with Navy non-air aspirating vari-nozzles with in-line eductor should be expected. Only Mil Spec 3 percent or 6 percent

AFFF foam should be used in Navy fixed systems. Navy systems tend to be larger and interconnected, thus the greater potential for problems due to foam incompatibility.

555-2.12.3 FITTINGS. MSC ships have either Navy 11-1/2 thread-per-inch NPSH or commercial 9-1/2 thread-per-inch NH on 1-1/2 inch threaded fittings on firefighting equipment. Navy support MSC ships have 1-1/2 inch Navy thread (NPSH). MSC ships that operate independent of Navy ships have commercial 1-1/2 inch thread (NH). Both Navy support and commercial ships have the same thread (NH) on 2-1/2 inch fittings. MSC ships have international shore connections as required in Navy ships.

555-2.12.4 PORTABLE EQUIPMENT. Portable firefighting equipment on MSC ships include:

protective clothing (the Navy ensembles currently carried will be phased out by two piece commercial fire-fighting suits)

hose

portable fire extinguishers

P-250 Mod 1 pumps

inline foam eductors

vari-nozzles

air aspirating foam nozzles self contained breathing apparatus SCBA (positive pressure, demand type)

NOTE

OBA's currently carried will be phased out by SCBA's.

NOTE

Prior to transferring equipment, assure 1-1/2 inch thread compatibility or availability of thread adapters.

555-2.12.5 DAMAGE CONTROL LOCKERS. MSC ships have damage control lockers outfitted with similar equipment found in Navy ships, though some of the items are commercial models.

555-2.12.6 FIREFIGHTING PERSONNEL AND PROCEDURES. MSC ships' personnel are trained in all aspects of firefighting and damage control. Firefighting and damage control procedures are similar to US Navy except that the organizational structure is smaller due to reduced manning.

555-2.13 PROTECTIVE DEVICES

555-2.13.1 FOR VALVES. Protective devices (e.g., locking devices) of the non-locking type are provided on the following fire extinguishing system valves:

a. Valves where the accidental opening or closing would prevent automatic, remote or local actuation of a fire-fighting service in a fire emergency.

b. Valves where the accidental opening would cause a firefighting system to be activated inadvertently.

555-2.13.2 DESIGN. Protective devices for valve hand wheels may comply with drawing NAVSHIPS No. S4824-1385509 or ASTM F-993. The use of padlocks for locking valves open or closed is not permitted.

555-2.13.3 FOR CONTROLS. Where valves in the above categories are fitted for remote control, the remote operating control is similarly protected. Protective devices, such as wire and lead seals, are used for controls where best suited for the component. A protective device is provided on each local and remote actuator in AFFF systems. Protective devices for remote Halon 1301 system actuators are in accordance with drawing NAVSEA 803-5773930 or 803-5959326.

SECTION 3.

FIRE EXTINGUISHING SYSTEM COMPONENT

555-3.1 AQUEOUS FILM FORMING FOAM SYSTEM COMPONENTS

555-3.1.1 INSTALLED FP-180 WATER MOTOR PROPORTIONER. The FP-180 water motor proportioner (see Figure 555-3-1) has two 2-1/2 inch connections, one for supply and one for discharge. The FP-180 is a positive displacement foam liquid pump driven by a positive displacement water motor. Flow through the water motor causes the foam pump to inject a metered amount of AFFF liquid concentrate into the water stream (6 parts AFFF concentrate to 94 parts water).

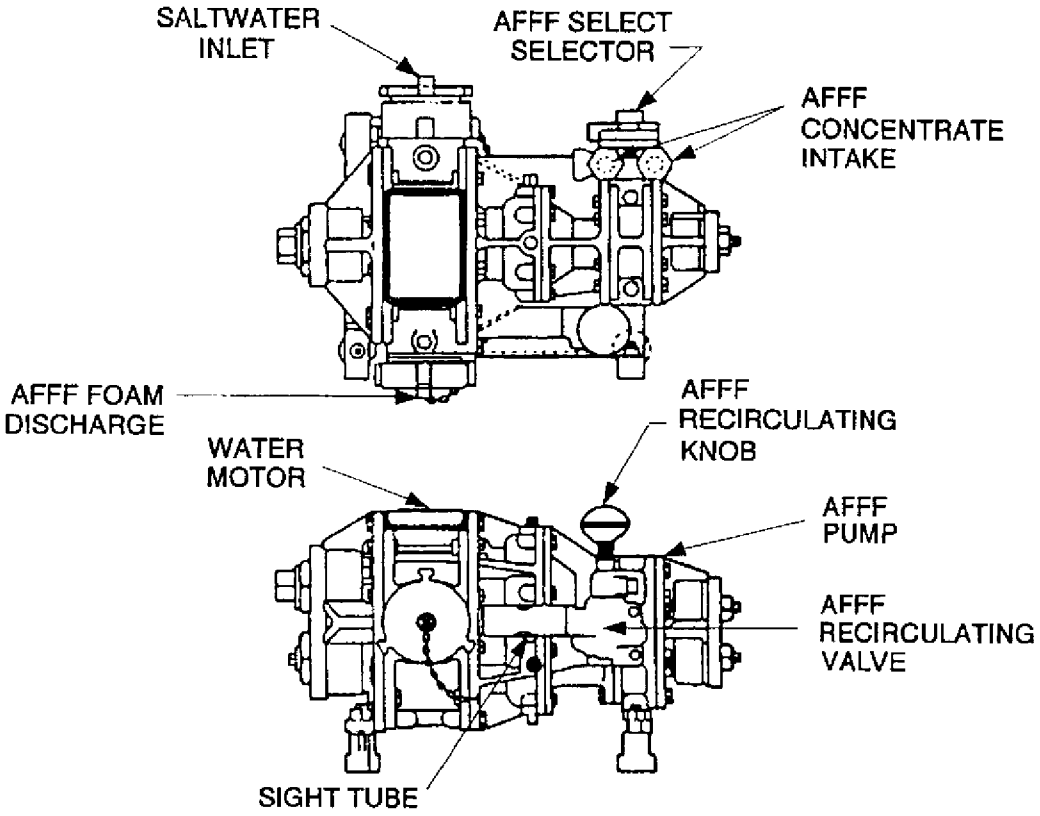

Figure 555-3-1 Installed FP-180

555-3.1.1.1 The FP-180 water motor is used as an installed unit. Flexible hoses are coupled to the water motor inlet and outlet. A fixed pipe leading from an installed AFFF storage tank is attached to one pickup tube inlet and the other inlet is plugged.

NOTE

The fixed FP-180 foam proportioner is being replaced by the 12 gpm injection pump and a fixed eductor system, or the balanced pressure proportioner installation. The portable FP-180 has been replaced by the inline eductor.

555-3.1.2 AQUEOUS FILM FORMING FOAM SINGLE SPEED INJECTION PUMP. The AFFF single speed injection pump is a permanently mounted, positive displacement, sliding vane type, electrically driven pump. These pumps are provided in capacities of 12, 27 and 60 gpm. The pump unit consists of a pump, a motor, and a reduction gear (except 12 gpm which is direct drive) coupled together with flexible couplings and mounted on a steel base. A second configuration is belt driven as shown in Figure 555-3-2. The pump is fitted with an internal relief valve which opens to prevent damage to the pump. The injection pump and the injection station piping are sized to produce a 6 percent nominal concentration at peak demand by injecting AFFF concentrate into the seawater distribution system. AFFF concentrate is supplied from an AFFF tank. In some installations there is a 1-1/2 inch hose connection between the pump and the pump cutout valve. This hose connection is used to transfer AFFF concentrate to other tanks by connecting hoses between the pump and fill lines of the other tank. AFFF is transferred by manually starting the injection pump. The injection pump is used to supply the washdown countermeasure system with AFFF, thereby using it as a fire extinguishing system for flight decks, deck edge nozzles, fantail, and helicopter landing flight decks and platforms. Besides washdown countermeasure systems, injection pumps also supply AFFF to reentry hose reels, well decks, and fueled vehicle stowage decks.

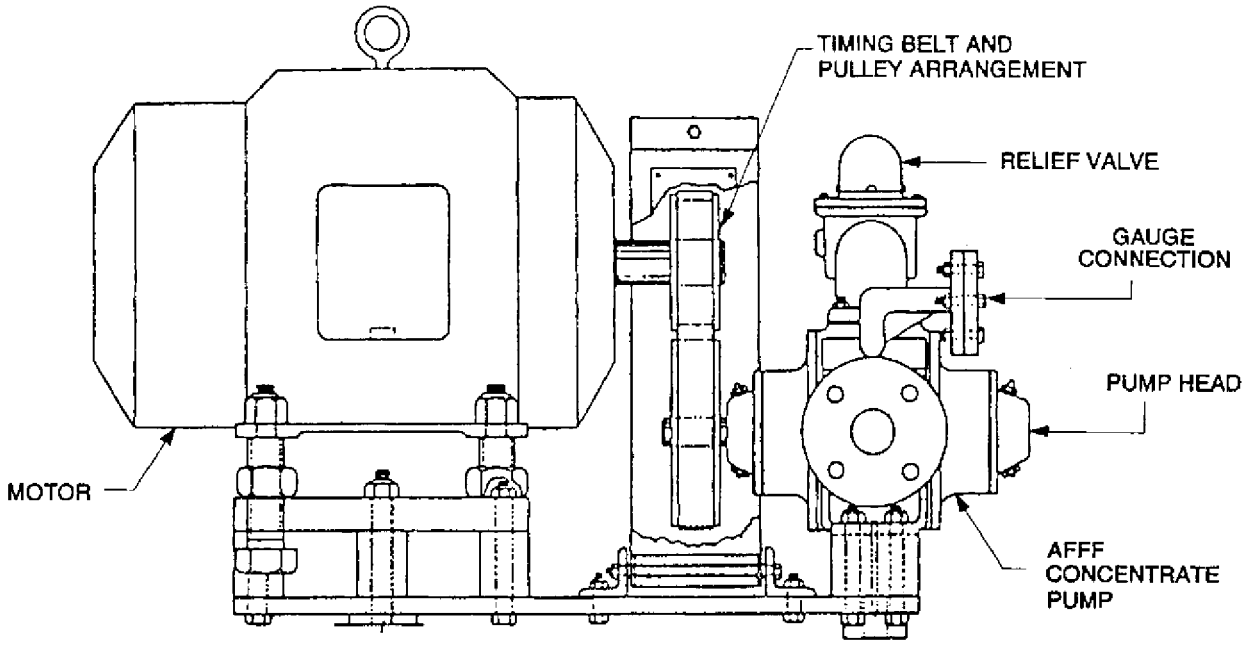

Figure 555-3-2 Type II Balanced Pressure Proportioner Aqueous Film Forming Foam Concentrate Pump and Motor Assembly

555-3.1.3 AQUEOUS FILM FORMING FOAM TWO SPEED INJECTION PUMP. The AFFF two speed injection pump is designed to meet the requirements of both a low and a high demand for firefighting capabil-

ity. The two-speed AFFF pump consists of a positive displacement pump rated at 175 psi, a motor, and a reducer coupled together with flexible couplings and mounted on a steel base (see Figure 555-3-3). The pump is designed to inject AFFF concentrate into the seawater supply at a constant flow rate (27 ″ gpm at 320 rpm or 65 ″ gpm at 640 rpm) depending on the pressure and demand of firefighting requirements. AFFF concentrations will exceed 6 percent in most cases. The low speed mode is used for individual AFFF demand hose reel stations. The high speed mode is used when firefighting flow rates exceed 250 gpm for hangar bay and deck edge sprinklers and 450 gpm for bilge sprinklers.

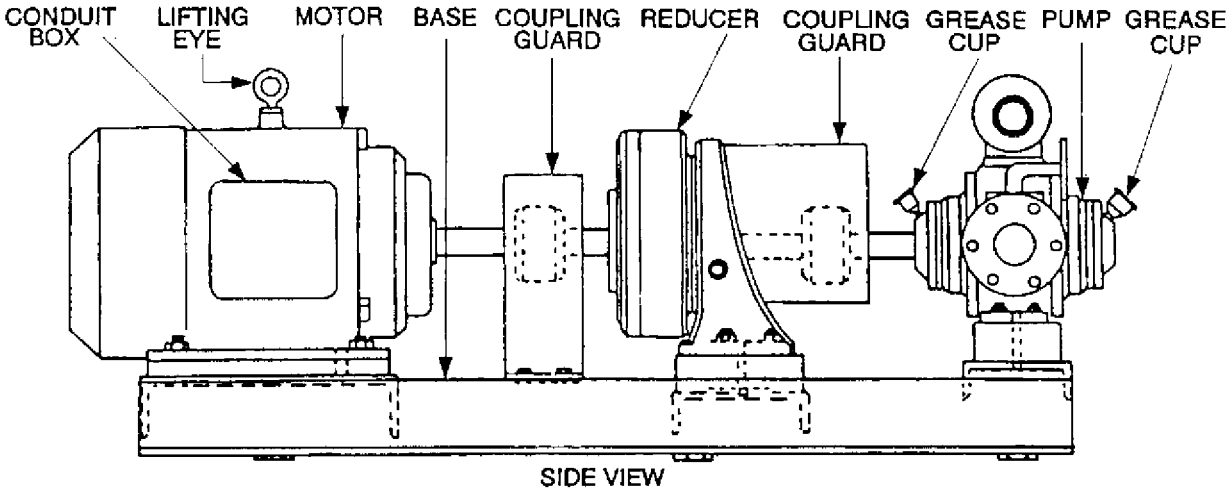

Figure 555-3-3 Typical Two Speed and Single Speed Aqueous Film Forming Foam Concentrate Pump Unit

555-3.1.3.1 The motor on the two-speed pump receives power from a motor controller supplied by a power panel which receives main ship's power from both a ship's service switchboard and the emergency ship's service switchboard. The power panel is equipped with an automatic bus transfer (ABT) to ensure a constant supply of electrical power to the two-speed pump.

555-3.1.3.2 The motor controller has provisions for both local and remote control. From the local control station, the pump can be started at either high or low speed. Remote control stations are segregated into high and low demand stations. High demand stations, such as that for a hangar bay sprinkler system, start the pump at high speed. Low demand stations, such as that for a hose reel, start the pump at low speed. When securing the system, the pump can only be stopped at the local control station.

555-3.1.4 AQUEOUS FILM FORMING FOAMING TRANSFER PUMPS. The AFFF transfer pump is a permanently mounted, single speed, centrifugal type, electrically driven pump. These pumps are provided in 360 gpm capacity. The transfer pump moves AFFF concentrate through the AFFF fill and transfer subsystem to all AFFF station service tanks on a selective basis.

555-3.1.5 BALANCED PRESSURE PROPORTIONER. The balanced pressure proportioner is designed for balancing (equalizing) the AFFF liquid pressure and firemain pressure at the entrance to the proportioner mixing chamber (venturi). The balancing valve (see Figure 555-3-4) automatically proportions the correct amount of AFFF concentrate with seawater. The balancing valve is a diaphragm-actuated control valve that responds to pressure changes between the AFFF concentrate supply line and the firemain. Two sensing lines are attached to the balancing valve, one to monitor the pressure in the AFFF concentrate piping, and one to monitor the firemain pressure. The pressure differential between these lines moves the diaphragm in the control valve. As the SW/AFFF flow increases, the firemain sensing line pressure drops and the control valve adjusts by forcing more

AFFF concentrate into the proportioner. If the SW/AFFF flow decreases, the firemain sensing line pressure rises and the control valve adjusts, resulting in less AFFF concentrate being pumped into the proportioner.

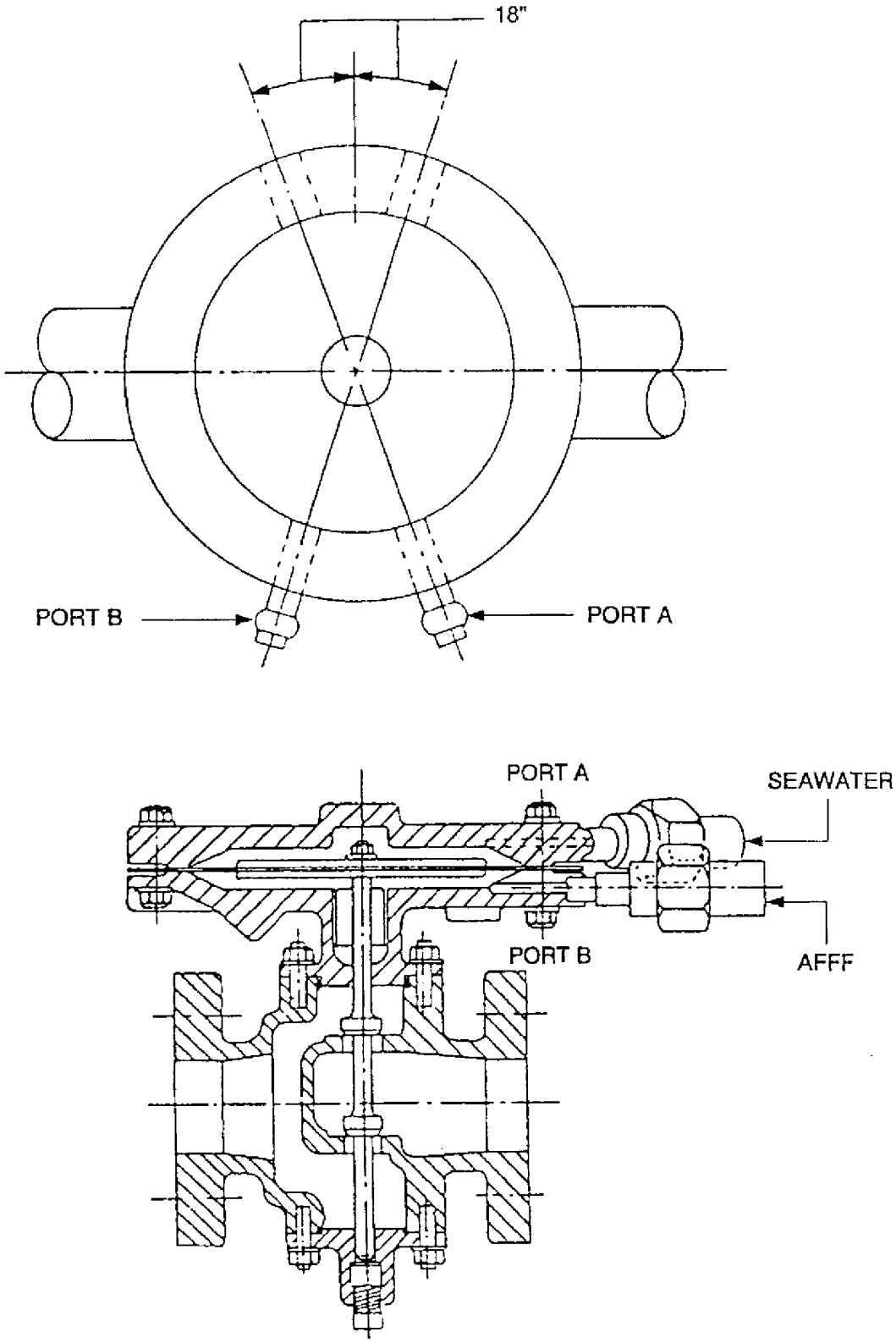

Figure 555-3-4 AFFF Balancing Valve

555-3.1.6 AQUEOUS FILM FORMING FOAM TANKS. AFFF is stored in service tanks of 50 to 2,000 gallon capacity and storage/transfer tanks of up to 3,500 gallon capacity. The tanks are rectangular or cylindrical in shape and are fabricated out of 90/10 copper nickel or corrosion resistant steel. Each service tank is located inside the AFFF station and is fitted with a gooseneck vent, drain connection, fill connection, liquid level indicator, recirculating line and an access manhole for tank maintenance. The gooseneck vent prevents excess build up of pressure within the tank during storage and prevents a vacuum when the system is in operation.

555-3.1.7 AQUEOUS FILM FORMING FOAM HOSE REELS. The AFFF hose reels are manufactured according to MIL-R-24414 and provide a swivel connection to the piping, which permits the hoses to be unwound from the reels while still connected to the piping. A geared/hand crank system is incorporated into the reels to facilitate rewinding of the hoses. A manually operated friction brake is attached to the reel pinion shaft. The brake is used to lock the hose reel in place and prevent it from turning. The brake should always be slightly engaged when the reel is in ready condition, so that the hose will not unreel itself due to vibration. AFFF hose reels are provided for entry into machinery spaces and to protect aviation facilities. AFFF enters the hose reel through a swivel joint and flows into an elbow located inside the drum. AFFF then flows through the outlet elbow which protrudes from an opening in the drum. The hose is connected to the outlet elbow and then wound around the wheel drum for storage. On some reels the subtitles (Size, Orifice, Pressure, outlet elbow is swivel or reversible type.

555-3.1.8 AQUEOUS FILM FORMING FOAM HOSE NOZZLES. AFFF hosereels use vari-nozzles as described in paragraph 555-4.8.

555-3.1.9 AQUEOUS FILM FORMING FOAM CONTROL VALVES. The following paragraphs present an overview discussion of Powertrol, Powercheck, Hytrol, Hycheck, Solenoid operated Pilot, and AFFF control valves. The application of a specific valve is dependent on the type of system and particular configuration.

555-3.1.9.1 Powertrol Valve. The Powertrol valve is a diaphragm type, normally closed, seawater pressure operated control valve that allows the flow of AFFF/seawater solution through the distribution system, or controls seawater flow on flight deck injection systems (see Figure 555-3-5 and Figure 555-3-6). The Powertrol is held normally closed by spring pressure. The valve is actuated when the control line is pressurized to firemain pressure by the service solenoid operated pilot valve (SOPV). This control line pressure is exerted on the bottom of the valve’s diaphragm and the valve is forced open against the spring.

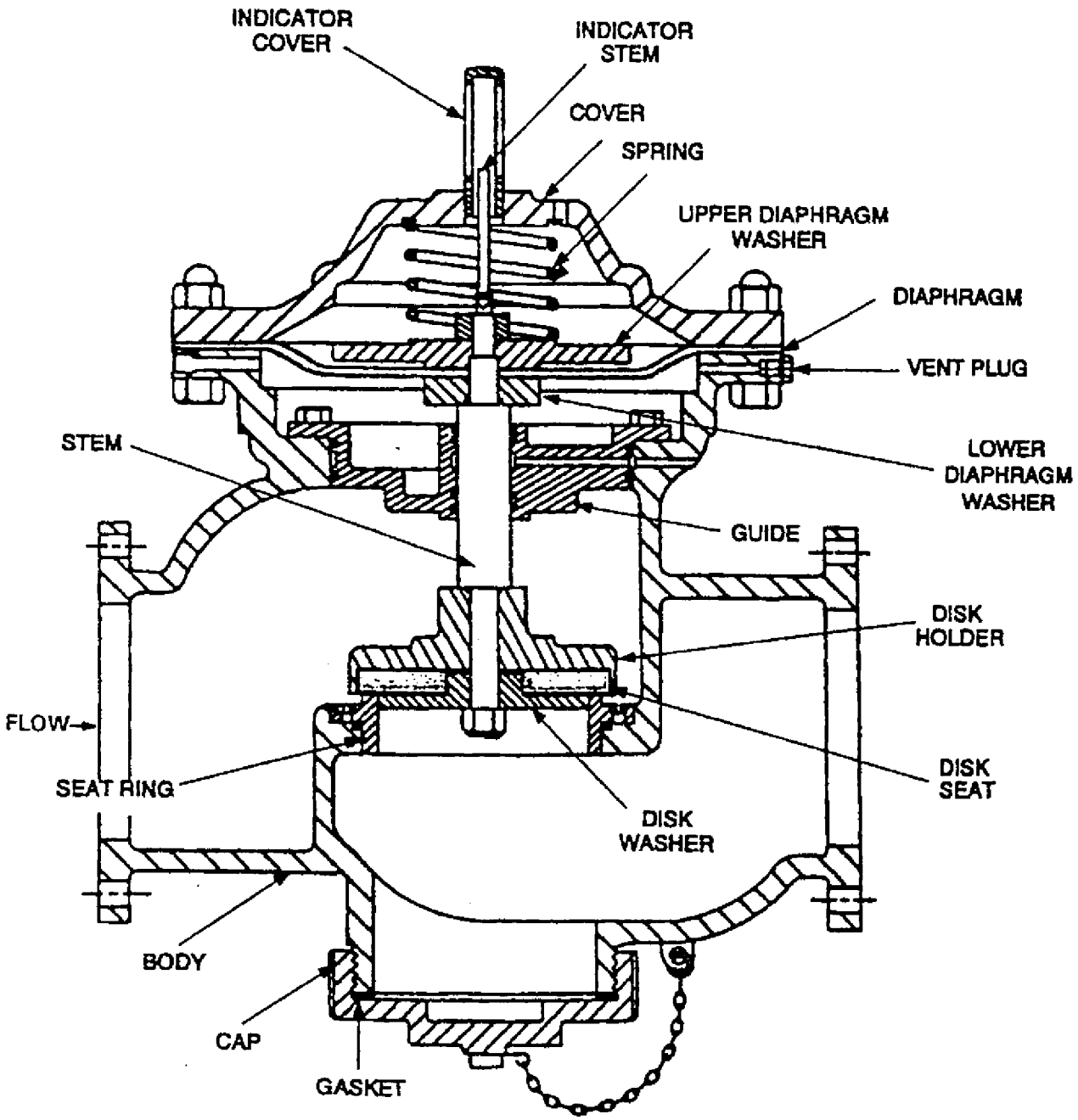

Figure 555-3-5 Powertrol Valve (Bailey Type)

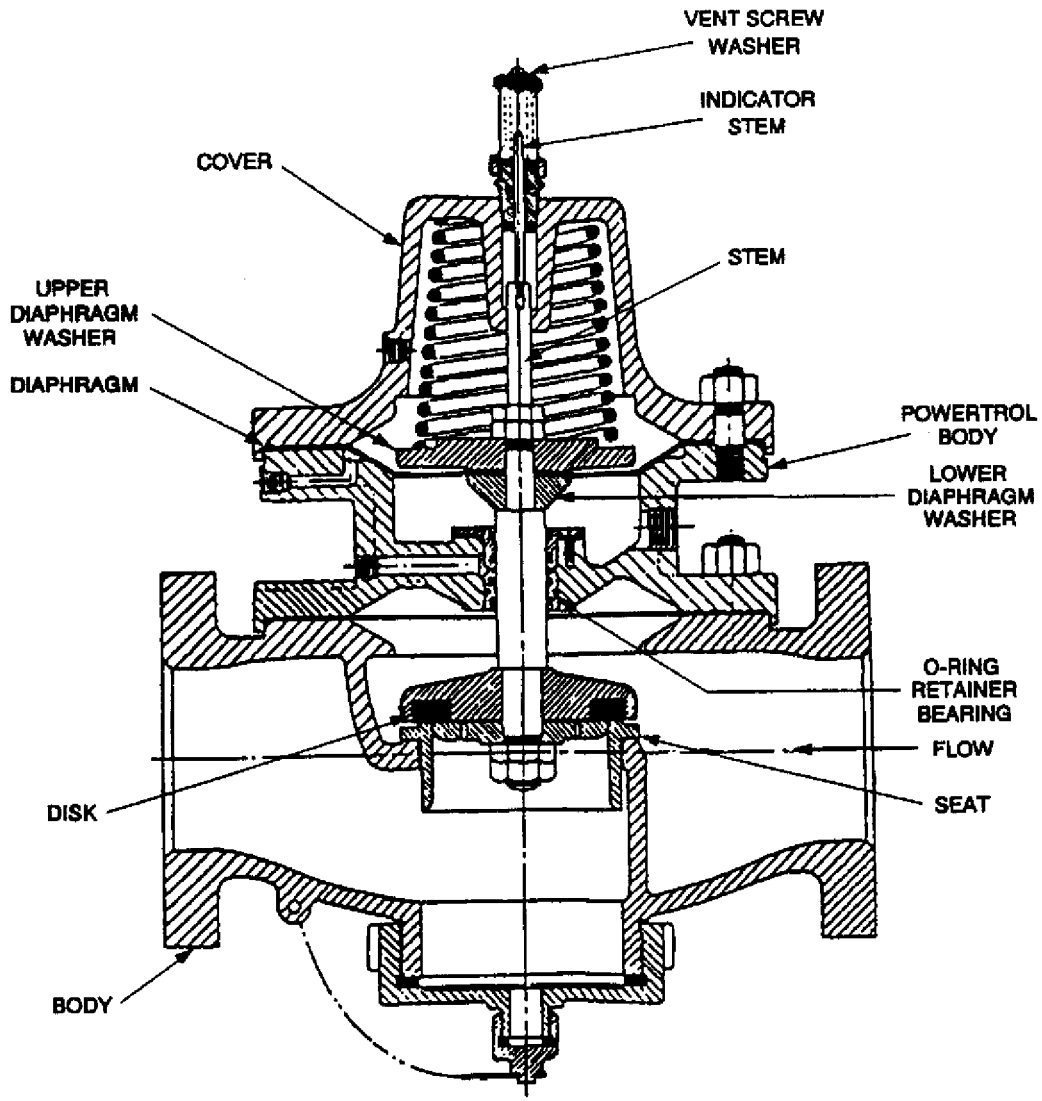

Figure 555-3-6 Powertrol Valve (CLA-VAL Type)

555-3.1.9.1.1 Test Fittings. A test fitting (test casting) is attached to the bottom of a Powertrol valve to prevent flow from sprinklers when testing an AFFF sprinkler system.

CAUTION

Test fittings are unmarked as to size. The threaded female end for size 1-1/4 and 1-1/2 inch test fitting will attach to a 2 inch valve and a 2-1/2 inch test fitting will attach to a 3 inch valve, which would result in flow past the fitting and inadvertent sprinkling.

555-3.1.9.2 Powercheck Valve. The Powercheck valve is a diaphragm type, normally closed, seawater pressure operated control valve that allows flow of AFFF from the pump to be mixed with seawater but protects the AFFF tank from seawater contamination or dilution (see Figure 555-3-7). The Powercheck is essentially a Powertrol

valve that has a lift check feature built into it. When there is no pressure on the control line, the upper valve spring forces the valve closed and the lift check feature is inoperative. When there is firemain pressure on the control line, this pressure acts on the bottom of the diaphragm and opens the valve against the upper valve spring. AFFF flow pushes the disk and lower stem up and allows AFFF to flow. If the back pressure downstream of the valve exceeds the pressure on the upstream side of the valve, the valve disc holder and stem will slide to the closed position preventing any backflow through the valve. On balanced pressure proportioning systems, the Powercheck does not have a lower spring.

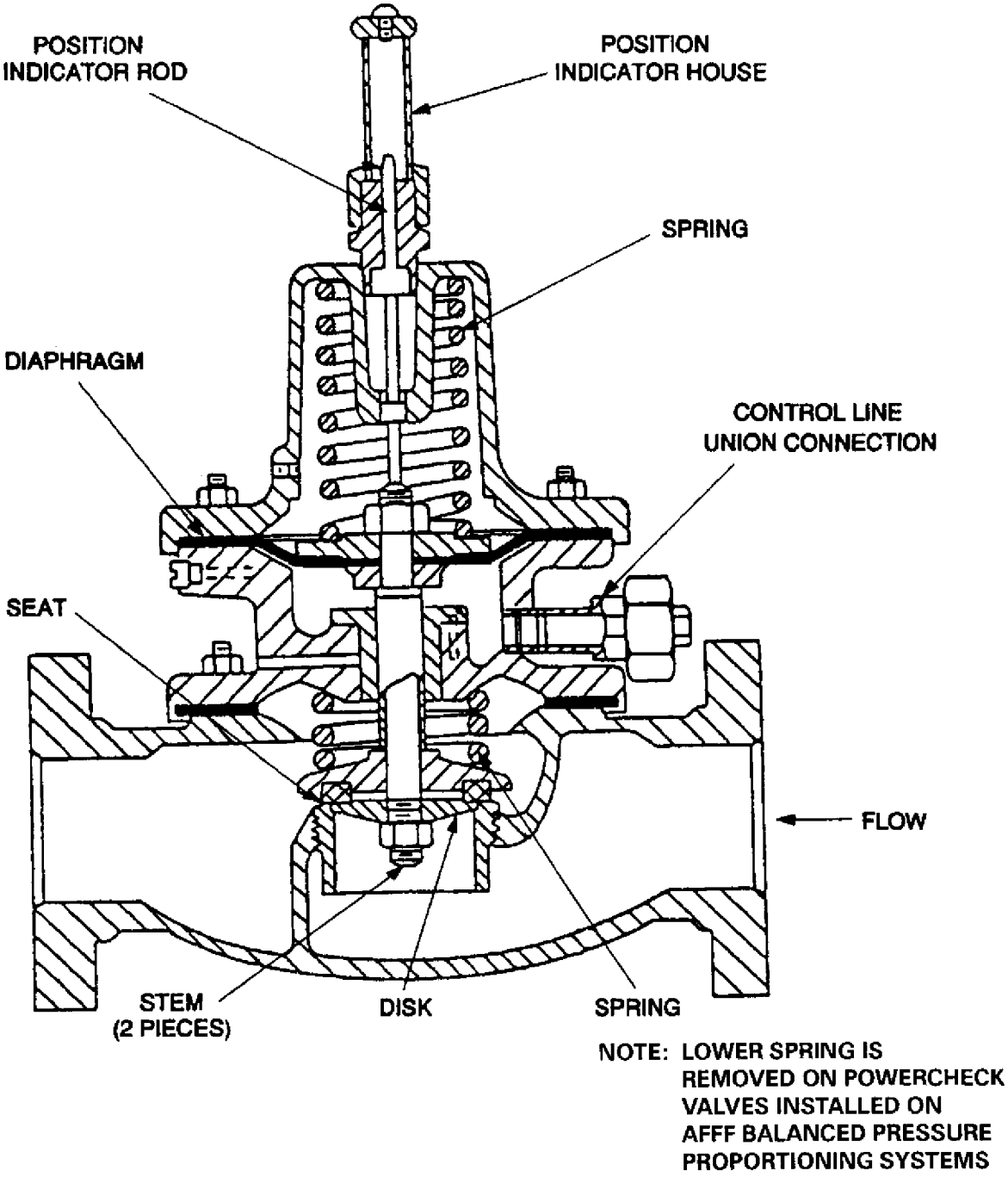

Figure 555-3-7 Powercheck Valve

555-3.1.9.3 Hytrol Valve. The Hytrol valve (see Figure 555-3-8) is a diaphragm type, fail open, seawater pressure operated control valve which controls the flow of AFFF solution to systems. When in ready status, the top of the diaphragm is subject to spring pressure and control line pressure. When the control line pressure is removed, the firemain pressure overcomes the spring pressure and opens the valve. When an SOPV directs firemain pressure to the control line, the pressure on top of the diaphragm balances the firemain pressure on the bottom of the diaphragm and allows the spring to close the valve.

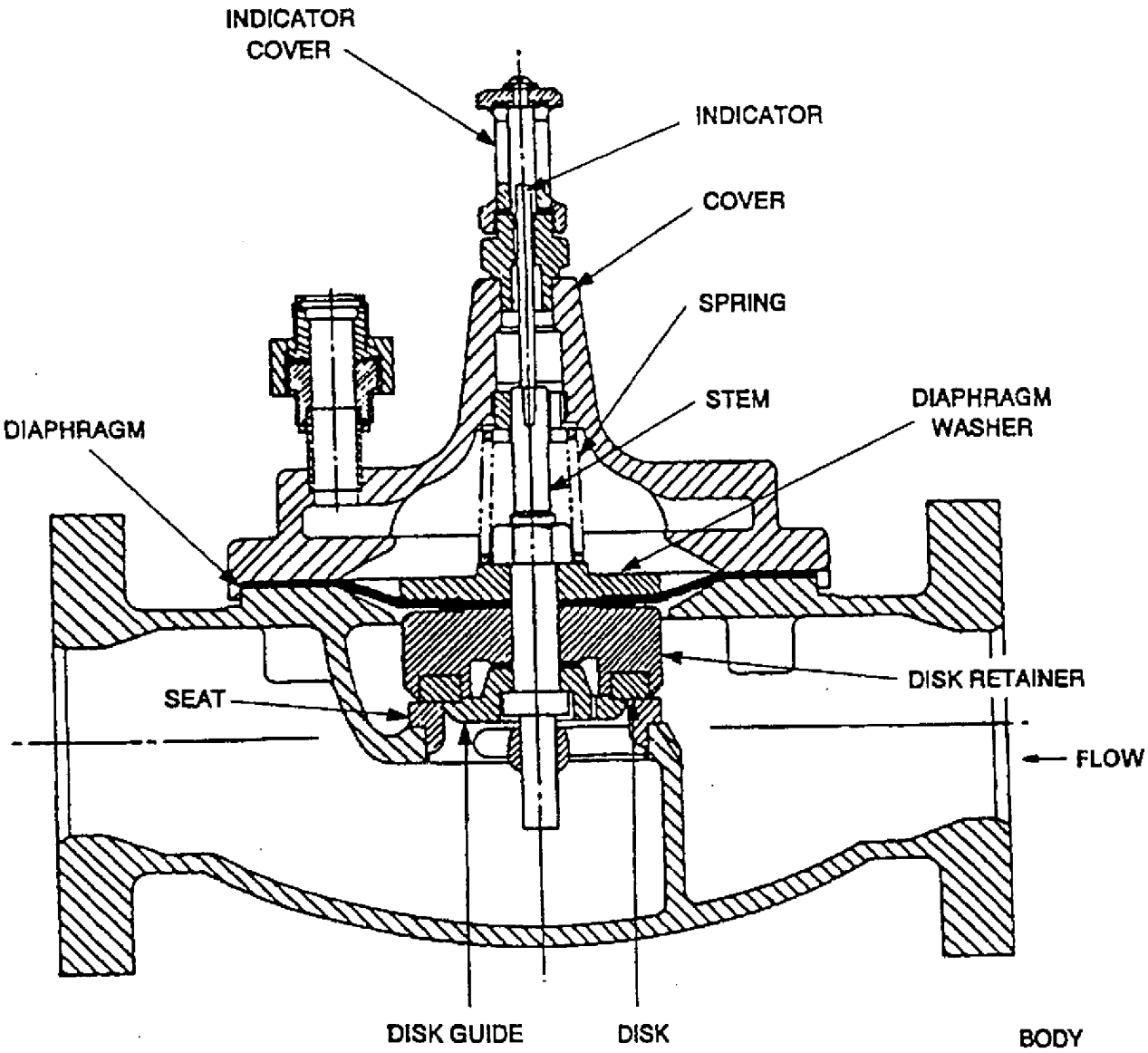

Figure 555-3-8 Hytrol Valve

555-3.1.9.4 Hycheck Valve. The Hycheck valve is a diaphragm type, fail open, seawater pressure operated control valve that allows the flow of seawater from the firemain system to be mixed with AFFF concentrate (see Figure 555-3-9). The Hycheck is equipped with a sliding firemain system to be mixed with AFFF concentrate (see Figure 555-3-9. The Hycheck is equipped with a sliding lift check feature like the Powercheck valve described in paragraph 555-3.1.9.2. When the AFFF system is in standby, the Hycheck is held closed by firemain pressure from the master SOPV on top of the diaphragm. When firemain pressure on the diaphragm is relieved

by the master SOPV, the Hycheck is forced open by firemain pressure. If foam demand stops and the AFFF/seawater solution pressure equals or exceeds the firemain pressure, the lower spring will close the valve disk to prevent the AFFF pump from pumping concentrate back into the firemain.

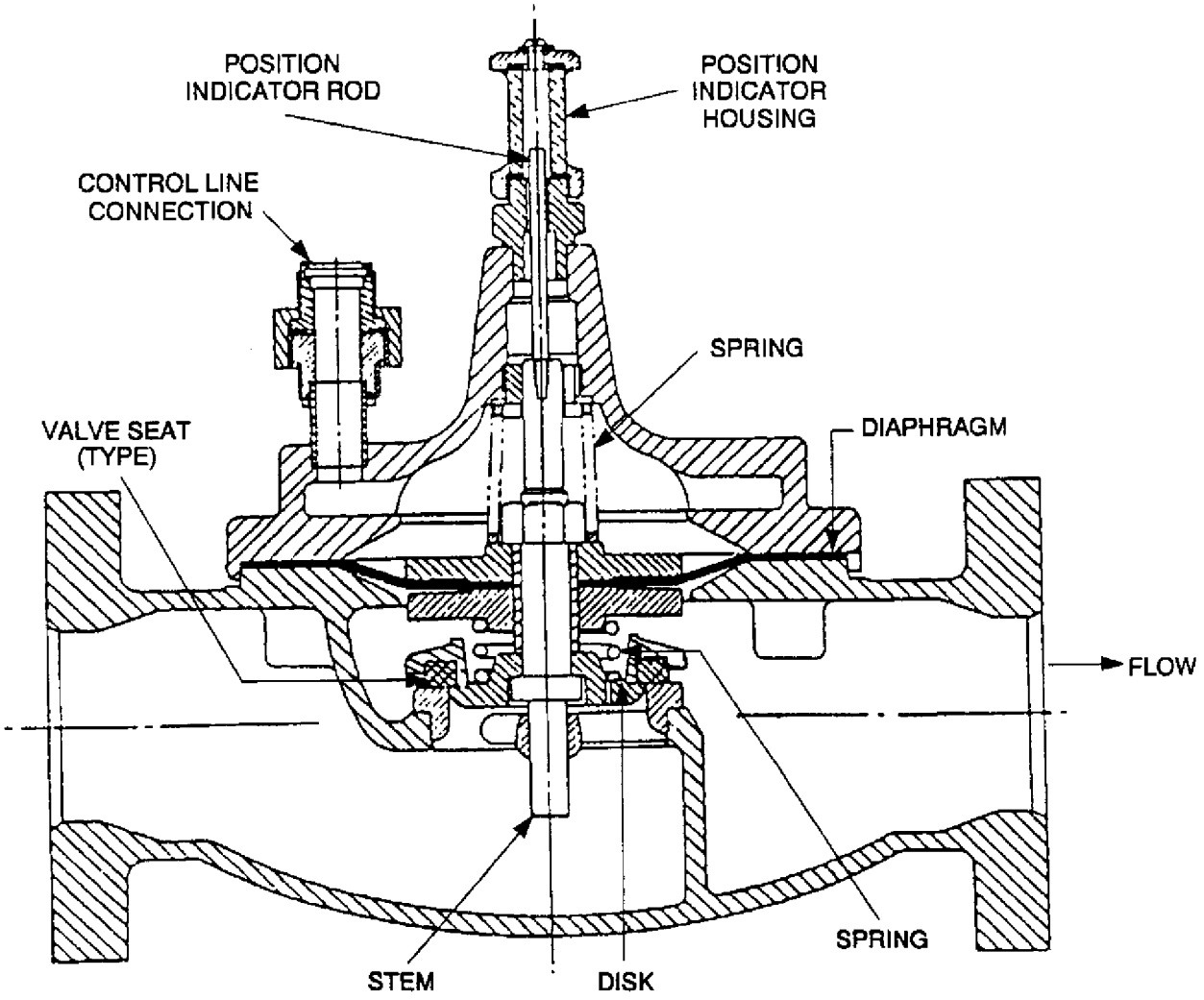

Figure 555-3-9 Hycheck Valve

555-3.1.9.5 Solenoid Operated Pilot Valve. SOPV's are electrically operated pilot valves that control the activation of many AFFF fire extinguishing systems. All SOPV's (master and service) have four control line ports (see Figure 555-3-10); one port is always connected to supply pressure (firemain), and a second port is the valve drain (which should be piped to discharge within the coaming of the AFFF station). The other two control ports are connected by control lines to diaphragm operated control valves on master SOPV's. Service SOPV's have one control port plugged. See technical manual NAVSEA S6435-B1-MMO-010, Solenoid Operated Pilot Valve, Model CSM5M-3A, for more information on SOPV's.

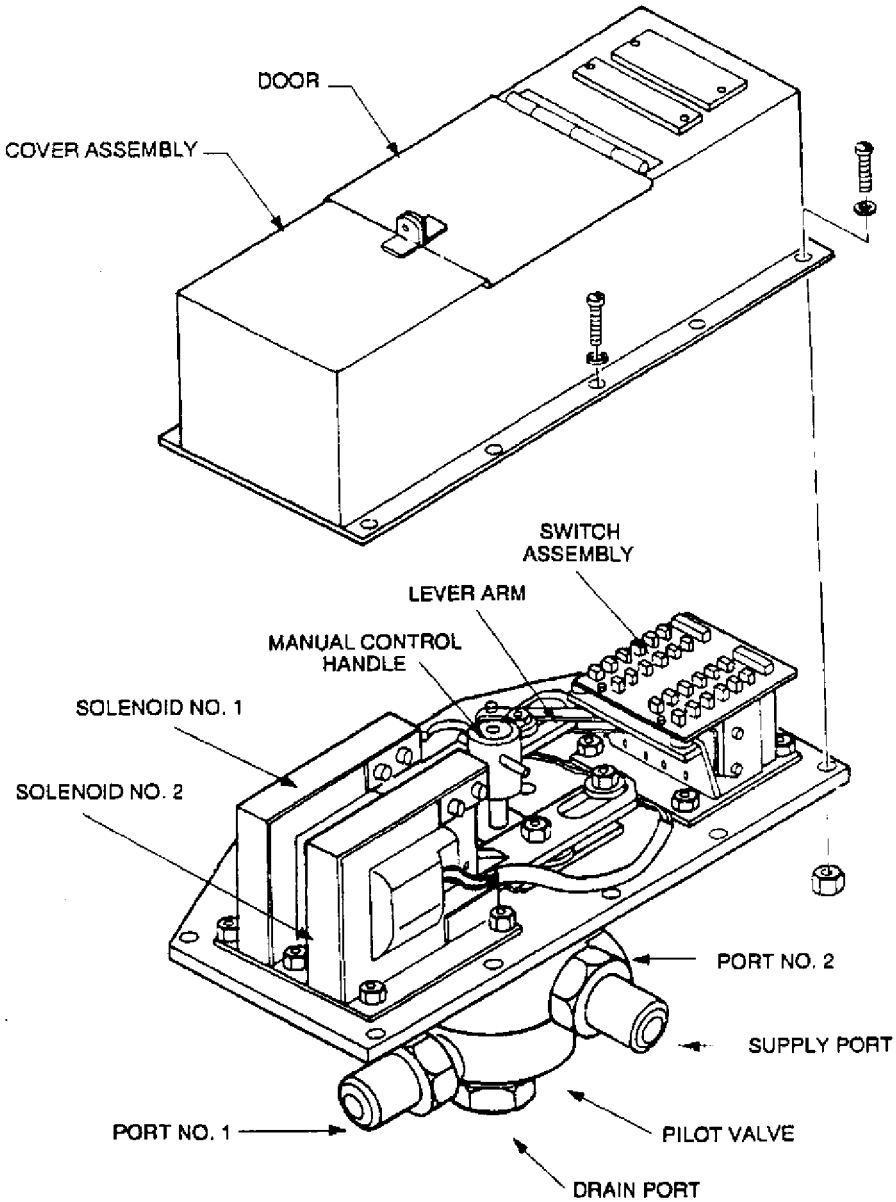

Figure 555-3-10 Solenoid Operated Pilot Valve

555-3.1.9.5.1 The Hycheck and Powertrol/Powercheck are connected to the master SOPV by seawater (firemain pressure) control lines. When the master SOPV is energized, the control line to the Powertrol/Powercheck is pressurized, which in turn opens the valve. This permits AFFF concentrate, under AFFF pump pressure, to lift the valve seat disc and flow to the seawater mixing point. At the same time, the SOPV relieves pressure in the Hycheck control line. This allows the Hycheck to be forced open by firemain pressure and provides seawater to be mixed with AFFF concentrate. All SOPV's are activated either electrically by switches or manually by rotating a T-handle at the SOPV.

555-3.1.10 AQUEOUS FILM FORMING FOAM SPRINKLERS. The four different AFFF sprinkler systems listed are briefly discussed in the following paragraphs.

a. Bilge

b. Overhead

c. Deck Edge

d. Flush Deck

555-3.1.10.1 Bilge Sprinklers. Each sprinkler is an aerating nozzle designed to discharge foam in a spray pattern and to deliver a blanket of foam over the protected area. The sprinklers are installed in pendant position with the deflector down. The sprinklers are connected to the sprinkler piping by 1/2-inch NPT connections. Each sprinkler head has a 3/8-inch opening and is made of bronze. Newer systems may have non-aerating nozzles in upright or pendant positions.

555-3.1.10.2 Overhead Sprinklers. Overhead sprinklers are identical to the aerating bilge sprinklers discussed in the previous paragraph. They are commonly installed in hangar bays, well decks, and fueled vehicle storage areas.

555-3.1.10.3 Deck Edge Sprinklers. The deck edge sprinkler nozzles are used to protect some helo decks, carrier bomb farms, and elevator platforms. They are installed on flight decks to complement flush deck nozzles. The nozzles are of two types; straight stream and spray patterns. Both types flow 30 gpm with 40 psig at their inlet (elevator nozzles are typically a larger gpm rating). The nozzles have a smooth bore and have no small orifices which can clog. The typical setting is 10 degrees above the flight deck horizontal plane.

555-3.1.10.4 Flush Deck Sprinklers. Flush deck sprinklers are installed to protect aviation ship flight decks and some helo decks. They are welded into the deck and supplied from AFFF/washdown piping underneath the deck. All flush deck sprinklers are currently being modified to include a ball check feature to prevent flight deck dirt from being washed back into the AFFF/washdown sprinkler piping. The latter are identified as Type SB sprinkler head; those without the ball check are Type S. The flow rate for both is 28 gpm at 30 psi.

555-3.2 CARBON DIOXIDE SYSTEM COMPONENTS

555-3.2.1 CARBON DIOXIDE TOTAL FLOODING SYSTEM COMPONENTS. Carbon dioxide total flooding systems are supplied by two manufacturers: Kidde-Fenwal Protection Systems and Ansul Fire Protection. The Ansul systems include the following three manufacturers who have all been absorbed by Ansul: Norris Industries, C-O-TWO Systems, and The Fyr-Fyter Company. The Ansul, Norris, C-O-TWO, and Fyr-Fyter CO_2 systems are essentially the same. However, there are significant component hardware differences between the Kidde and Ansul systems. The Ansul systems are readily recognized by the lever release mechanism on the pilot cylinders, as shown in Figure 555-3-12. For comparison, the Kidde system pilot cylinder discharge heads are shown in Figure 555-3-11. The following paragraphs describe components used in several of the various carbon dioxide total flooding systems now in service. See carbon dioxide system technical manuals listed in Table 555-1-1 for more information.

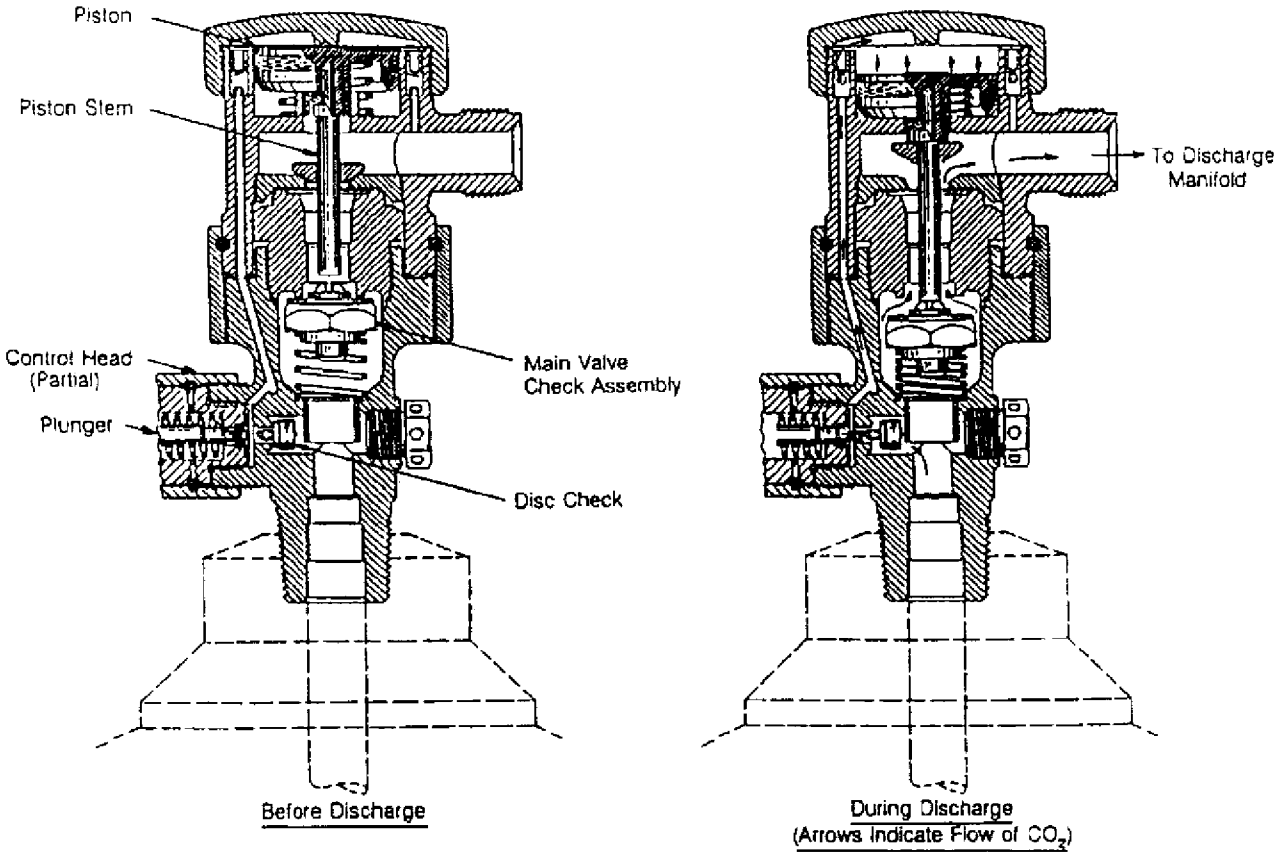

Figure 555-3-11 Kidde Pilot Cylinder Discharge, CO_2 Fixed Flooding System

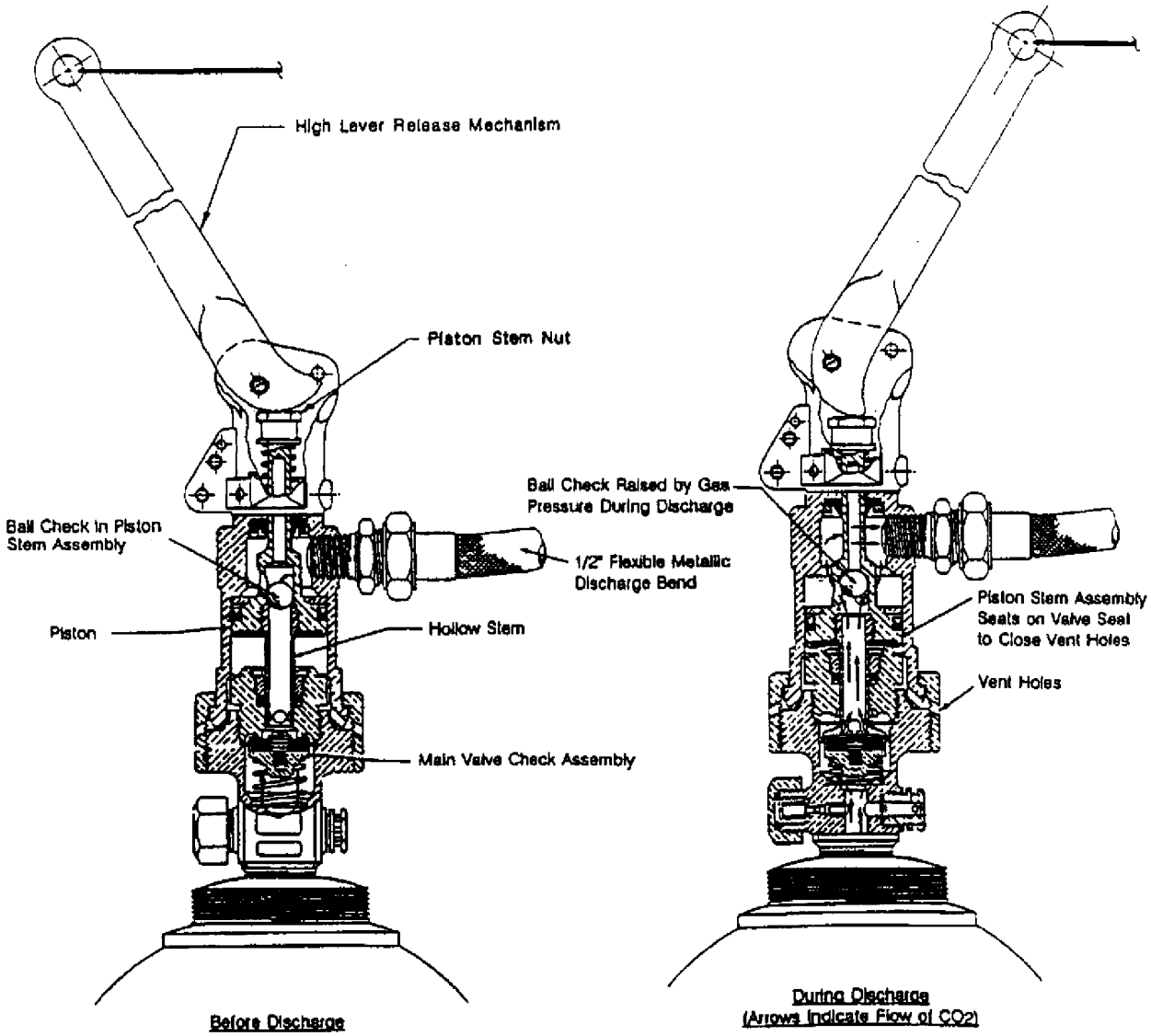

Figure 555-3-12 Ansul Pilot Cylinder Actuation, CO_2 Fixed Flooding System

555-3.2.1.1 Cylinder and Flood Valve. The carbon dioxide (CO_2) is stored in liquid form in shatterproof steel cylinders manufactured according to federal specification RR-C-901. The nominal capacity of the cylinder is 50 pounds of liquid CO_2 . The number of cylinders in a manifold is dependent upon the specific requirements of the area to be protected. The contents are retained within the cylinder by a flood valve that utilizes pressure to keep the valve seat shut. Cylinder/Flood valve assemblies are controlled by the military specifications covering the fixed systems. Flood valves are interchangeable between different manufacturer's CO_2 total flooding systems.

555-3.2.1.1.1 The operating principle of the flood valve for Kidde systems is to use the pressure within the cylinder to release CO_2 . The valve contains a drilled passage in the valve body which goes from the pilot/filler port to a point near the top of the valve body. There is a small disc check valve in the pilot/filler port that also uses the cylinder pressure to maintain the check valve shut. For Kidde systems, a control head is threaded onto this

port and is equipped with a plunger which moves forward to unseat the disc check. The purpose of the drilled passage is to vent CO_2 gas from the pilot/filler port to the top side of a piston in the discharge head which is threaded onto the top port of the flood valve. The piston moves forward to unseat the main valve. Ansul systems are not equipped with control heads. For Ansul systems, the flood valve is actuated by a lever operated discharge head attached to the top port of the valve. The Ansul discharge head piston moves forward to unseat the valve by means of a lever mechanism attached to the discharge head.

555-3.2.1.1.2 The CO_2 cylinder flood valve is provided with a safety disk, and a nut washer. The safety disk and washer prevent the possibility of critical overpressurization by allowing the cylinder to discharge before pressure becomes too great. The safety disk, a copper foil seal, is designed to burst between 2,650 and 3,000 psi. The head of the safety nut is drilled to prevent recoil when the disk bursts. Since the burst pressure is dependent upon the strength and thickness of the disk and the diameter of the hole in the safety nut, it is imperative that replacement disks and safety nuts be in accordance with the manual furnished by the equipment manufacturer. The capacity of each cylinder is stamped on the collar of the cylinder flange cap. Should a cylinder be removed from the installation for any reason, the cylinder cap should be attached to the cylinder to protect the flood valve from possible damage.

555-3.2.1.2 Kidde Discharge Head (Plain Nut Type). The plain nut discharge head (see Figure 555-3-11), when actuated, discharges the complete contents of the cylinder. The discharge head is assembled to the top of the cylinder flood valve. The discharge head contains a two-ball check valve arrangement which permits the flow of gas from the main discharge port to the space above the piston and stem. It also permits gas which has been released by the action of the control head, to flow from the pilot/filler port at the side of the cylinder flood valve into the space above the piston and stem. The gas depresses the piston and stem which, in turn, unseats the flood valve check assembly and discharges the contents of the cylinder. This type of discharge head is identified as the plain nut type because a ″plain″ smooth cornered swivel nut is used to attach the unit to the cylinder flood valve.

WARNING

Some Kidde installations may exist where a bank of CO_2 cylinders, located within the protected space, have manual local control levers installed on the control head(s). Immediate action must be taken to render actuation of the CO_2 system from inside the protected space impossible.

WARNING

To prevent accidental release of CO_2 , the operating pull-cable must be enclosed inside a cable guard pipe or conduit and expanded metal screens must be put in place over the CO_2 cylinder release valve levers and exposed cable at the cylinders.

WARNING

Danger signs shall be in place and clearly legible which warn personnel to evacuate the protected space and to prevent personnel from reentering the space when the CO_2 actuation alarms operate, prior to CO_2 release.

555-3.2.1.3 Kidde Cable Operated Control Head. The Kidde cable operated control head (Figure 555-3-13) is attached to the threaded connection at the side of the cylinder flood valve. Pulling the cable will advance a wheel assembly which depresses a lever. The action of the lever advances a plunger which unseats the flood valve disk permitting gas to be routed to the discharge head.

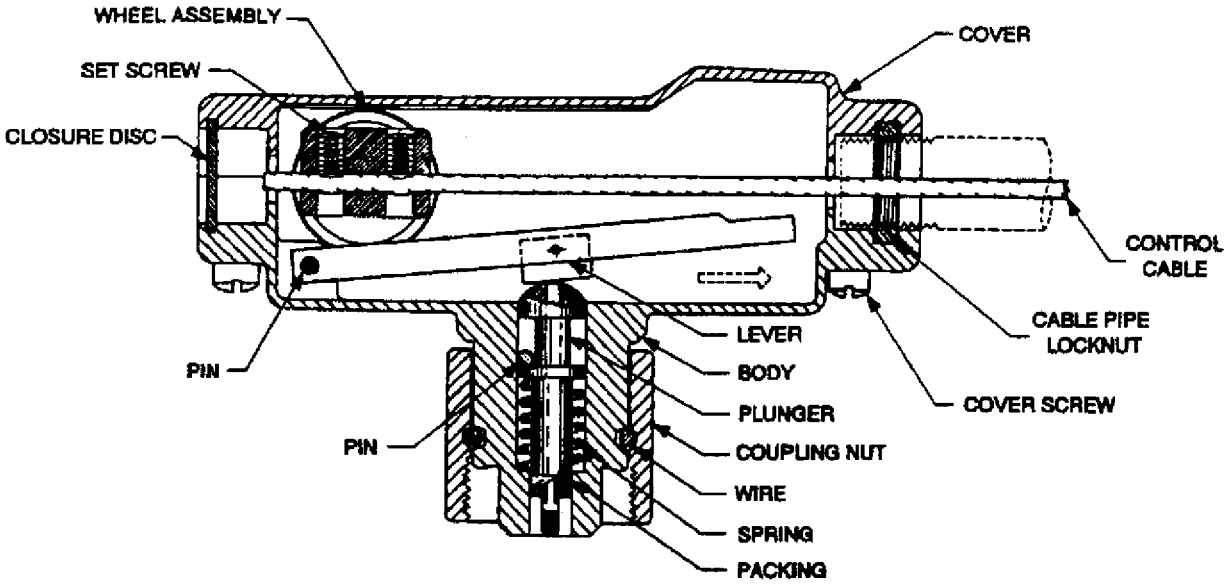

Figure 555-3-13 Typical Kidde Carbon Dioxide System Cable Operated Control Head

555-3.2.1.4 Ansul AP-6 Discharge Head. The Ansul AP-6 discharge head (see Figure 555-3-12), when actuated, discharges the entire contents of the CO_2 cylinder. The discharge head is attached to the top of the cylinder flood valve. The head contains a hollow piston stem assembly. This assembly is held in place by a stem spring. The discharge head can be actuated manually or automatically. To actuate the discharge head manually, the piston stem assembly is depressed by a lever attachment (AP-6 discharge head with high lever release) connected to the top of the discharge head. The depressed stem, in turn, unseats the cylinder valve releasing CO_2 from the cylinder. CO_2 from the cylinder passes through the discharge head hollow stem and out the flexible metal discharge hose. A ball check is installed in the hollow stem and is raised while CO_2 passes through the hollow stem. The discharge head (AP-6 discharge head with acorn protection cover) can also be actuated automatically from the pressure of CO_2 entering the head from the manifold through the flexible metal discharge hose. When CO_2 enters the head from the manifold, the ball check in the hollow stem is seated preventing CO_2 from entering the space below the piston stem assembly. The pressure of the CO_2 exerted on the top of the piston assembly forces the piston assembly downward. The depressed piston stem assembly, in turn, unseats the cylinder valve releasing CO_2 from the cylinder.

555-3.2.1.5 Watertight Break Glass Pull Box. The watertight break glass pull box provides a method of actuating the system from a location removed from the protected area, permitting the operator to remain outside of the danger zone. The watertight seal is accomplished by utilizing a cover and gasket positioned against the pull box body. The cover is held securely in place by a screw and a coiled spring seated in the beam. The cover shrouds the glass shield which must be broken to permit the operator to have access to the pull handle.

555-3.2.1.6 Multiple Pull Mechanism. Pull cable mechanisms are available for combinations of numbers of pull boxes and numbers of cylinders to be activated.

555-3.2.1.7 Pressure Operated Switches. Pressure operated switches (see Figure 555-3-14) are utilized in the fixed systems and mounted outside the protected area near the access to the space. The switches are operated by CO_2 pressure. Switches are utilized in each of the protected spaces to shut down ventilation, light the red lamp in the FR circuit, and sound an alarm bell.

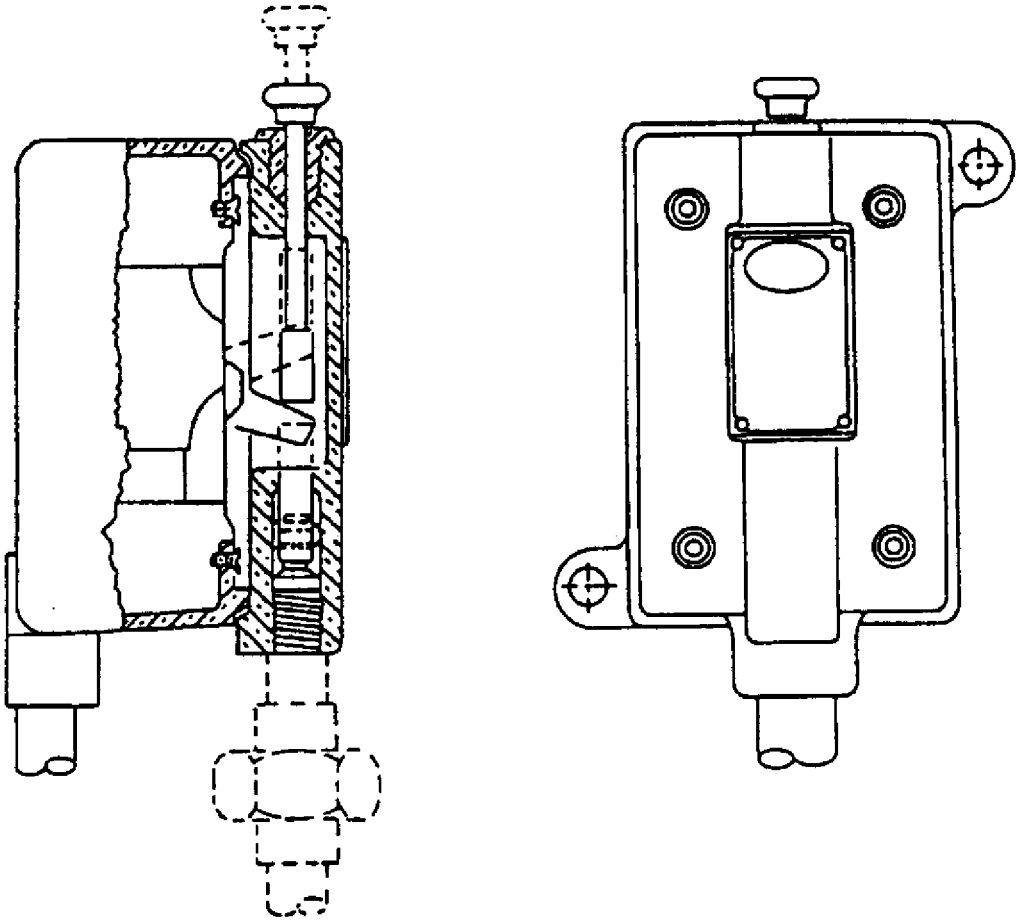

Figure 555-3-14 Typical Carbon Dioxide System Pressure Operated Switches

555-3.2.1.8 Corner Pulleys. Corner pulleys and remote control cable, which are completely enclosed, are used in fixed systems for manual operation between pull boxes and the control head. Corner pulleys are utilized at all changes in the direction of the remote control cable.

555-3.2.1.9 Multijet Nozzles. Multijet nozzles are an effective means of discharging large volumes of CO_2 with low velocity to prevent serious agitation. In addition, they have been designed to flow freely in the presence of CO_2 snow or frozen water vapor.

555-3.2.1.10 Discharge Time Delay. A discharge time delay (see Figure 555-3-15) is installed in the piping on all CO_2 total flooding systems to provide adequate time for personnel to evacuate the space. CO_2 enters the inlet connection on the body and flows through the metering tube assembly to the accumulator. As the pressure

increases in the accumulator, the CO_2 also begins to pressurize the chamber at the top side of the piston. When sufficient pressure is attained, the piston depresses the main check assembly, allowing the CO_2 to pass straight through the body. The amount of time required for this operation depends upon the length of the tube.

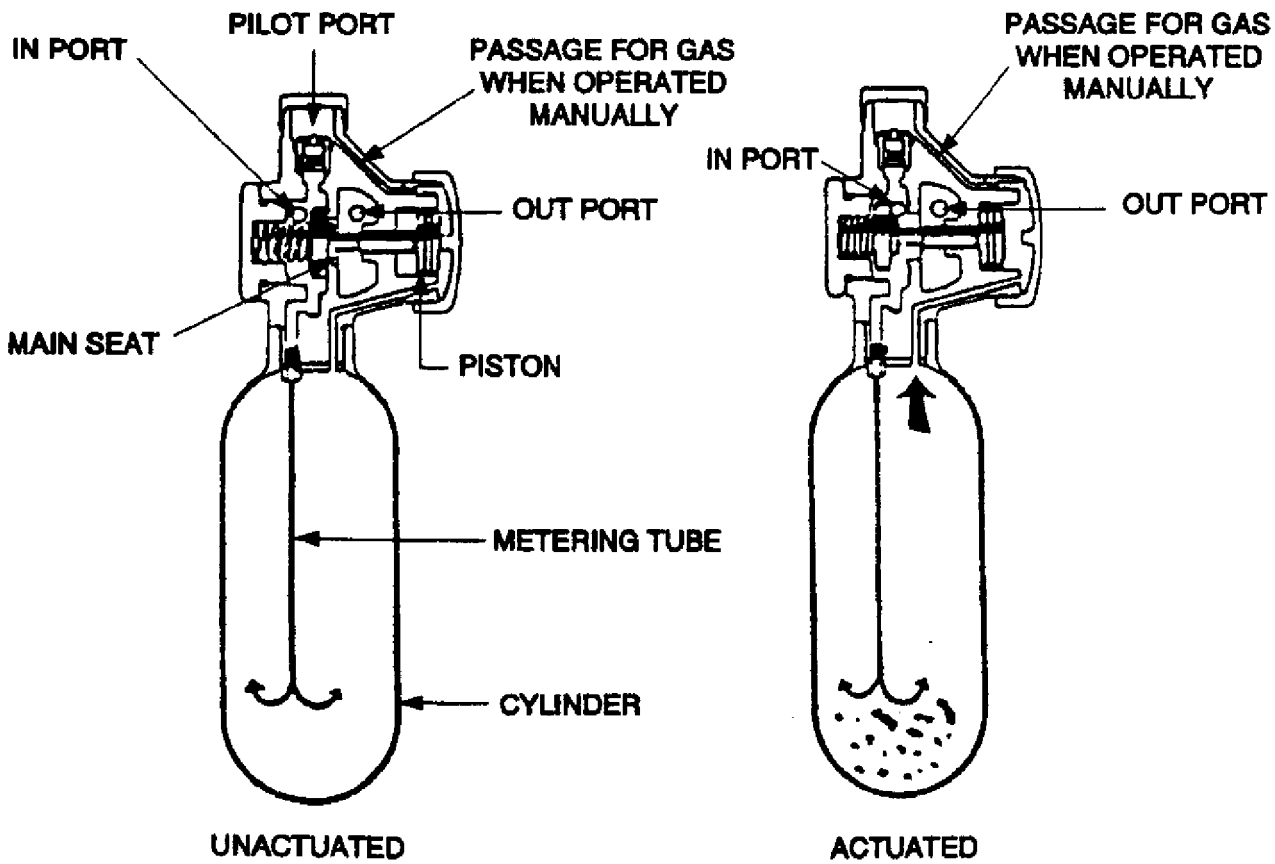

Figure 555-3-15 Typical Carbon Dioxide System Discharge Time Delay

555-3.2.1.11 Check Valve. Check valves are installed downstream of the cylinders and upstream of the interconnecting piping used to join two separate CO_2 fire extinguishing systems. The check valves are used to limit CO_2 flow to one direction.

555-3.2.1.12 Automatic Door Latch. For safety, an automatic door latch mechanism is being installed for CO_2 protected spaces with inward opening doors. The door latch is installed to prevent compartment overpressurization in the event of an accidental discharge of CO_2 . The door latch is designed in accordance with NAVSEA Drawing 803-6983467.

555-3.2.2 CARBON DIOXIDE HOSE REEL SYSTEM COMPONENTS. New CO_2 hose reel system installations are provided only in nuclear ship main spaces and electric propulsion motor spaces of electric drive ships for main power system energized electrical fires. CO_2 hose reel systems in other applications may be disabled and removed when authorized by the type commander. CO_2 hose reel and cylinder systems consist of two cylinders, a length of special CO_2 hose on a reel, and a horn-shaped nonconducting nozzle equipped with a control valve. See carbon dioxide system technical manuals listed in Table 555-1-1 for more information.

555-3.2.2.1 Cylinder and Flood Valve. When the hose and reel are both installed near the normal access, each of the two cylinders is provided with an individual on-off control. If the cylinders are not located near the hose reel, remote control pull boxes are provided at the hose reel for discharging each cylinder individually.

555-3.2.2.2 Discharge Head (Grooved Nut Type). When the cylinder valve is equipped with the Kidde grooved nut discharge head, both main discharge port and control port are normally kept sealed by gas pressure from within the cylinder. Opening the control port by means of a control head permits gas to flow into the space above the discharge head piston, which depresses the piston and opens the main discharge port. It should be noted that the grooved nut discharge head does not allow gas to flow from the discharge outlet to the space above the discharge valve piston. Hence, gas pressure in the manifold will not open the cylinder valve. The valve can only be opened by the operation of the control head.

WARNING

Grooved nut discharge heads are to be installed only for CO_2 hose reel installations. They must not be installed with CO_2 total flooding systems.

555-3.2.2.3 Hose and Hose Reel. The high pressure hose (minimum 5,000 psi bursting pressure) is stowed on a permanently mounted trunnion type reel (see Figure 555-3-16). Piping from the cylinder is run into the CO_2 connection in the axle of the reel. A gland and packing are provided at this point to seal the connection against leakage as the reel is rotated to wind or rewind the hose. A swivel nut is used to attach the hose to the reel, so that the hose can be readily replaced without having to twist the whole length of hose.

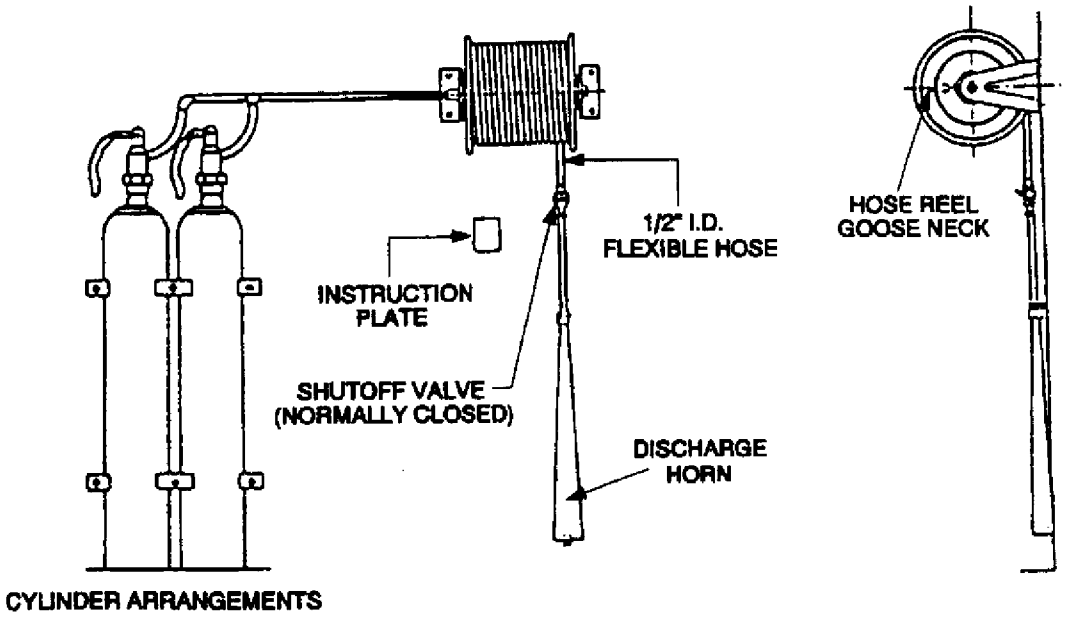

Figure 555-3-16 Carbon Dioxide Hose Reel Installation

555-3.2.2.4 Discharge Horn with Squeeze Grip Control Valve. The discharge horn assembly also includes a wooden handle, under the squeeze lever, and discharge horn made of non-conduction material. The control valve is a pressure seat type, with the seat held closed by a helical spring. The valve is opened by means of the squeeze

lever on top of the valve, which forces the valve stem down to unseat the pressure seat. The helical spring under the pressure seat returns the valve to a closed position, when pressure on the squeeze lever is released. The discharge horn assembly also includes a wooden handle, under the squeeze lever, and a discharge horn made of non-conduction material with a handle for carrying and directing discharge.

555-3.2.2.5 Control Mechanism. Both the flooding type installation and the hose and reel system employ disk type valves with discharge heads of various designs that are operated either locally or at some distance by means of a pull box. Differences exist in the method of release. In flooding type installations, the CO_2 is released from 1 or 2 pilot cylinders by direct action, and from the other cylinder or cylinders by the pressure of the released CO_2 . In hose reel installations, CO_2 is released from single cylinders independently by means of a manual on-off control lever located on each cylinder. Due to space limitations, cylinders may not be located near the hose reel. When the cylinders are more than 10 feet from the hose reel, manual pull boxes are provided at the hose reel for discharging each cylinder individually.

555-3.2.3 PRESSURE. In all Navy CO_2 cylinders, the CO_2 is held under a pressure of 850 psi at 70°F. Any increase in temperature increases the pressure, and any decrease in temperature decreases the pressure. Since pressure of liquified CO_2 builds up rapidly as the temperature rises, the following procedures are utilized to avoid the danger of explosion.

a. Rated capacity of the cylinders is never more than 60 percent of the liquid volume capacity of the cylinder, or 68 percent for portable CO_2 fire extinguishers.

b. Cylinders are hydrostatically tested to a minimum of 3,000 psi.

c. Cylinders are fitted with a bursting disk designed to relieve from 2650 to 3000 psi.

555-3.2.3.1 Carbon dioxide cylinders used in fixed flooding carbon dioxide systems are nominal 50 pound capacity; approximately 60 percent of water capacity. Therefore, these cylinders can be installed in spaces of temperatures up to 135°F with a full 50 pound charge.

555-3.2.3.2 Table 555-3-1 shows the pressures of CO_2 when it is held in containers filled to 68 and 60 percent of their water capacity and subjected to temperatures ranging from -10° F to 160° F.

Table 555-3-1 CARBON DIOXIDE CYLINDER TEMPERATURE VS PRESSURE COMPARISON

CO_2 Pressure			
60% Water Capacity	**68% Water Capacity**	**Temperature (°C)**	**Temperature (°F)**
260	260	-23.33	-10
310	310	-17.78	0
360	360	-12.22	10
415	415	- 6.67	20
504	504	0	32
565	565	4.44	40
650	650	10.00	50
744	744	15.56	60
850	850	21.11	70
975	975	26.67	80
1,150	1,205	32.22	90

Table 555-3-1 CARBON DIOXIDE CYLINDER TEMPERATURE VS PRESSURE COMPARISON - Continued

CO_2 Pressure			
60% Water Capacity	**68% Water Capacity**	**Temperature (°C)**	**Temperature (°F)**
1,310	1,465	37.78	100
1,500	1,725	43.33	110
1,700	1,995	48.89	120
1,920	2,265	54.44	130
2,150	2,545	60.00	140
2,380	2,825	65.56	150
2,600	3,105	71.11	160

555-3.3 HALON 1301 SYSTEM COMPONENTS

555-3.3.1 BANKED AND MODULAR HALON SYSTEM COMPONENTS. Each system consists of Halon 1301 cylinders, cylinder valves with actuators, CO_2 actuation devices and piping, a vent fitting, flexible discharge hoses, flexible actuation connections, check valves, a time delay device, time delay bypass valve, pressure switches, and discharge nozzles. Systems are described in paragraph 555-2.9.

555-3.3.2 HALON COMPONENT REQUIREMENTS. Most components are in accordance with Military Spec MIL-E-24572. The FFG 7 class has some commercial equipment manufactured by Wormald International (Sydney, Australia).

555-3.3.2.1 Manual Actuation Cylinder. The manual actuation cylinder is the principle means of actuating the Halon 1301 system (see Figure 555-3-17). It consists of a cylinder with a 5 pound charge of CO_2 fitted with a manual valve. The CO_2 acts as the pneumatic medium for the operation of the Halon cylinder valves.

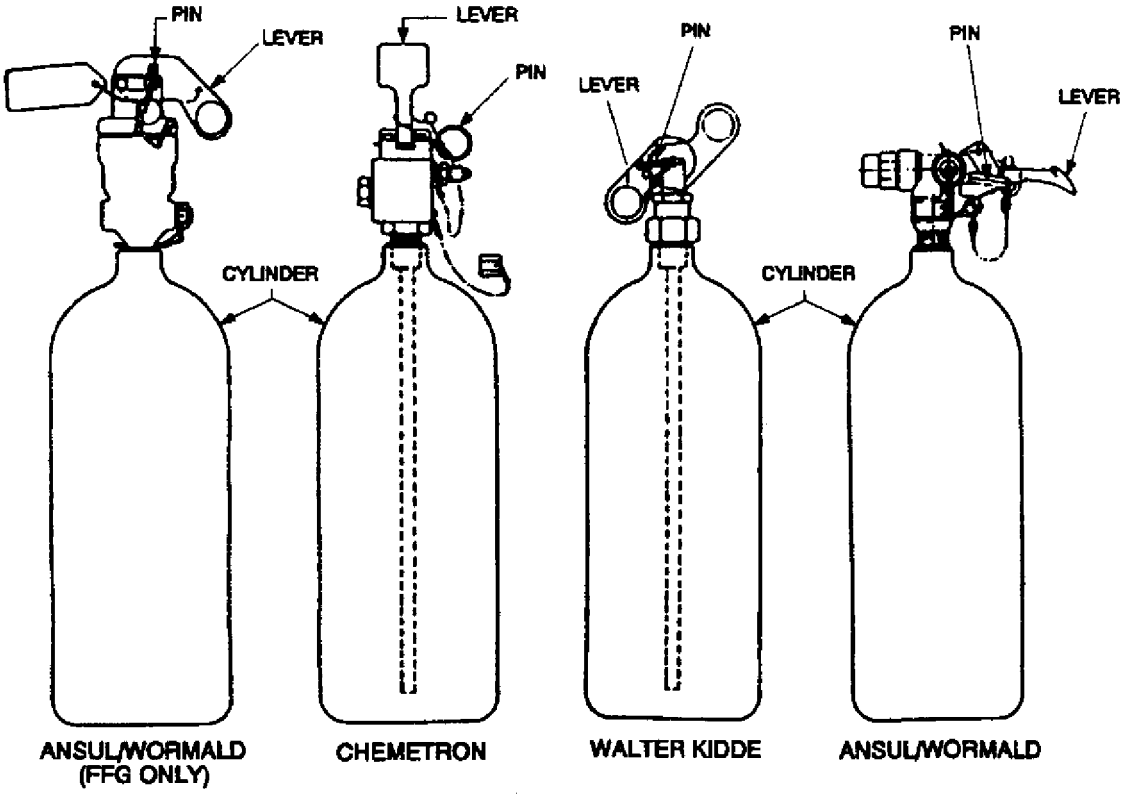

Figure 555-3-17 Manual Actuation Cylinder for Halon 1301 Systems

555-3.3.2.1.1 The CO_2 is held in the cylinder by the valve seat and by the rupture disk. To release the CO_2 the lead wire seal is broken, the pin is removed, and the manual control lever is operated. For Wormald International, Chemetron, and Walter Kidde actuators, the lever is rotated from the CLOSED to the OPEN position. The cam action of the manual lever depresses the actuating plunger. The actuating plunger opens the seat and the CO_2 is discharged. For Wormald (U.S.) actuators, the lever is depressed fully (about 45 degrees), and must be engaged by the locking spring.

555-3.3.2.2 Manual/Solenoid Actuation Cylinder. The manual/solenoid actuation cylinder (see Figure 555-3-18) is similar to the manual actuation cylinder as described previously. It is typically used in gas turbine module Halon 1301 systems.

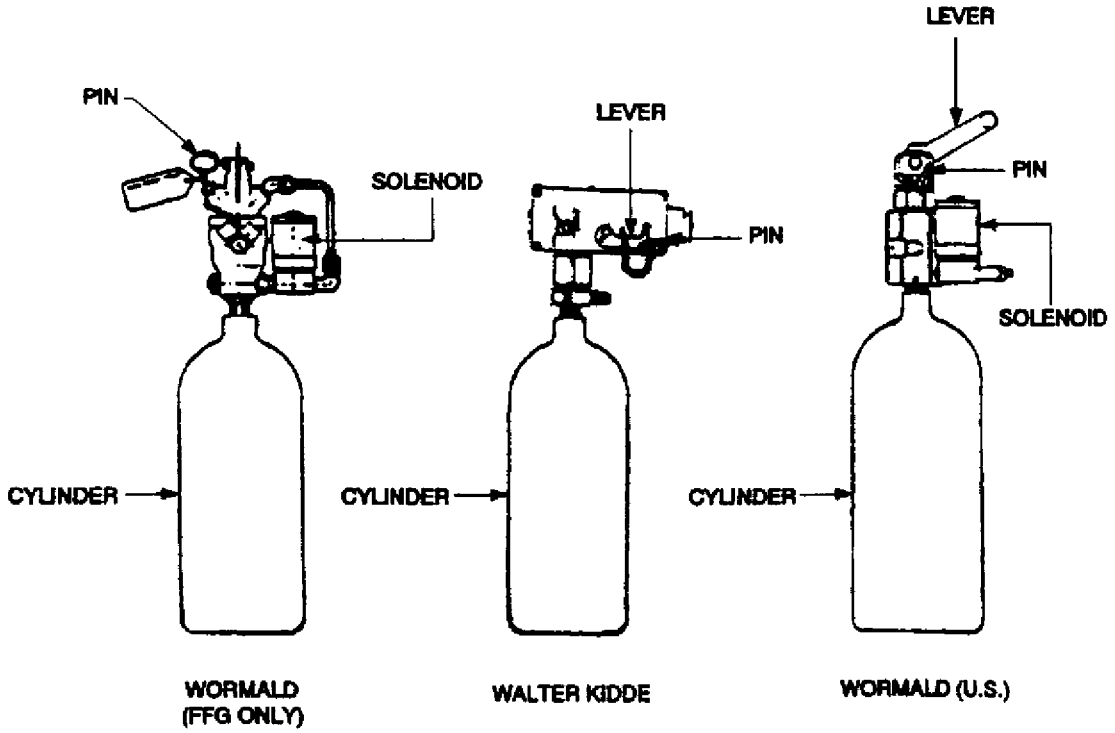

Figure 555-3-18 Manual/Solenoid Actuation Cylinder for Halon 1301 Systems

555-3.3.2.2.1 The solenoid valve is provided to allow electrical remote operation of the Halon system.

555-3.3.2.3 Metallic Hose. The metallic type of hose is used throughout the system for high pressure, flexible, readily breakable connections between the rigid pipelines and the components of the system. 1/4-inch hose should be installed with a bend radius of 4-inches or more, and 1-1/2-inch hose should be installed with a bend radius of 22-inches or more. For improved system reliability, 1/4-inch hoses are being replaced with Cu-Ni tubing with a minimum bend radius of 2 inches. These tubing assemblies are in accordance with NAVSEA Standard Drawing 803-6397405.

555-3.3.2.4 1/4-Inch Check Valve. This check valve is used throughout the system in high pressure CO_2 lines to isolate actuation stations, time delays and pressure switches. Some Halon systems have new check valves which are in accordance with NAVSEA Standard Drawing 803-6397404.

555-3.3.2.5 Pressure Switch. Pressure switches (see Figure 555-3-19) are usually installed only in CO_2 actuation pipelines. Some ships have pressure switches in the Halon discharge pipelines. These pressure actuated switches initiate Halon actuation alarms, ventilation system shutdowns, vent closure operation, and Halon discharge alarms.

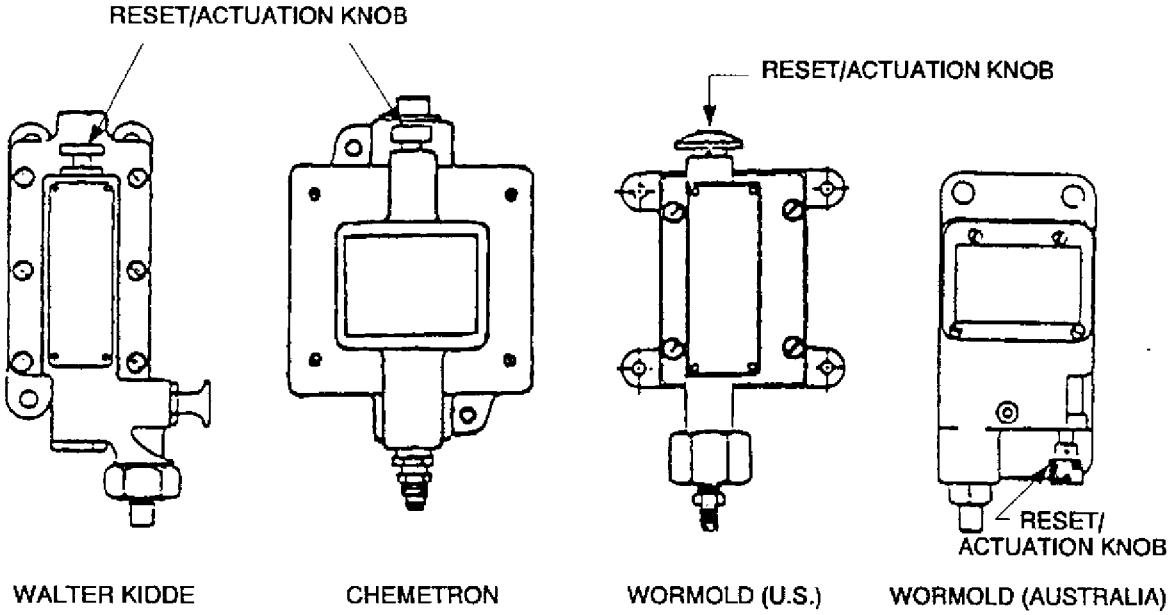

Figure 555-3-19 Pressure Switches

555-3.3.2.5.1 The CO_2 or Halon 1301 pressure pushes up the switch actuator piston and stem which is connected to the switch lever operating assembly. The position of the reset knob indicates whether the switch is in the actuated or nonactuated position. The reset knob provides the option to operate the pressure switch by hand to test the alarm and shutdown circuits or sound alarms manually.

555-3.3.2.6 Carbon Dioxide Vent. The CO_2 vent is a pipe plug with a small hole that allows the venting of pressure in the actuation piping. System components can then be safely disconnected after system operation. New vent fittings should have a 1/32-inch hole.

555-3.3.2.7 Time Delay Device. The time delay device (see Figure 555-3-20) is installed in the CO_2 actuation system between the 5 pound CO_2 cylinders and the Halon cylinders. The time delay device gives personnel time to secure accesses to the compartment and time for the ventilation system to shut down, before Halon 1301 is released. Time delay devices manufactured by Chemetron, Wormald/Ansul, and Walter Kidde will be removed and replaced with Carleton Technologies time delay devices, which should not be disassembled for repair aboard ship. Only authorized depot level repair activities are permitted to repair Carleton time delay devices.

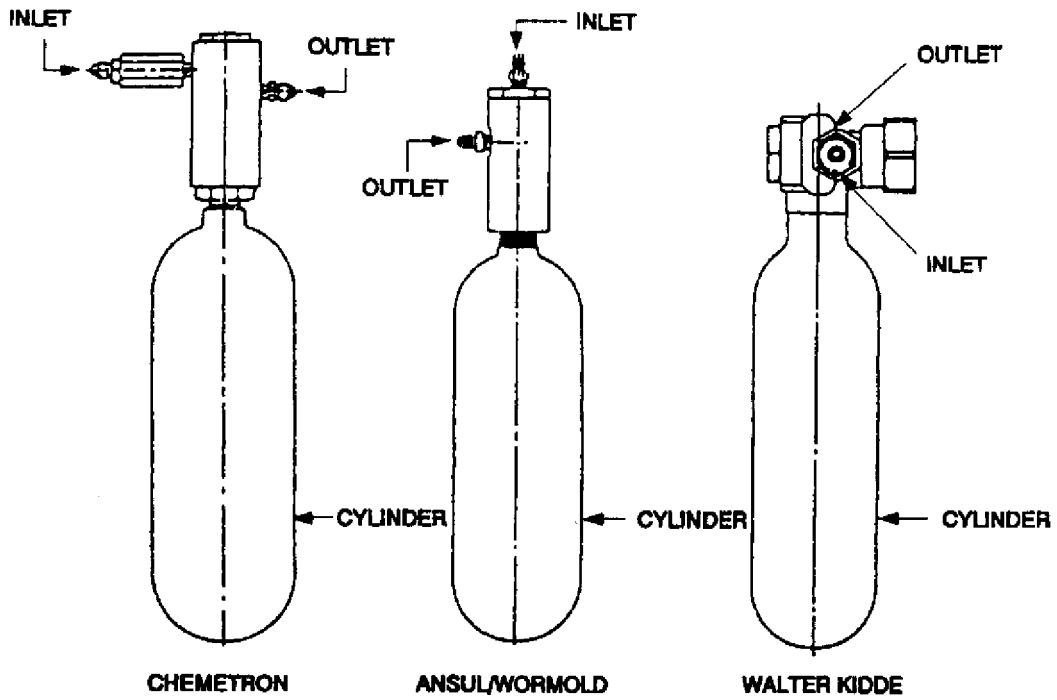

Figure 555-3-20 Old Style Time Delay (Halon 1301 Actuation Systems)

555-3.3.2.7.1 Provision is made to manually override the automatic time delay device by use of a quarter turn ball valve.

555-3.3.2.8 Halon Cylinder and Valve. Halon 1301 cylinders contain Halon in its liquid form pressurized with nitrogen at 600 to 675 psi at 70°F (21.1° C).

555-3.3.2.8.1 Military specification cylinders per MIL-E-24572 are supplied in 10, 15, 60, 95, and 125 pound capacities. The number and size of cylinders will vary depending on the size of the space protected.

555-3.3.2.8.2 The cylinder includes a wide neck, a siphon tube, and a cylinder valve, operated by external pilot pressure. The cylinder valve assembly is identical for all size cylinders, except for the 10 lb size in FFG-7 class ships.

555-3.3.2.8.3 Halon 1301 is retained in the cylinder by the valve seat assembly. In addition to the valve seat, the pressure gage and rupture disk are exposed to cylinder pressure at all times.

555-3.3.2.8.4 The discharge port safety cap has radially drilled holes, which will reduce the jet reaction of the high-pressure gases in the event of leakage or inadvertent discharge. The safety cap must be kept in place at all times when the cylinder is in transit or not connected to fixed piping.

555-3.3.2.8.5 Halon 1301 is released by the application of CO_2 pressure to the valve actuator on the top of the Halon cylinder valve. The CO_2 pressure drives down the piston in the valve actuator, which operates a Shraeder (tire) valve. Pilot pressure on top of the cylinder valve seat vents through the Shraeder valve. The pressure of

Halon below the seat opens the valve when the CO_2 has vented off sufficiently. Halon 1301, in its liquid phase, flows up the siphon tube, passes around the open valve seat, and discharges through the 1-1/2 inch hose, to the piping.

555-3.3.2.8.6 The pressure gage indicates the total pressure in the cylinder at any time.

555-3.3.2.8.7 Valve actuators on MIL-E-24572 Halon Cylinders are removable for system testing. Valve actuators from different manufacturers are not interchangeable.

WARNING

The Ansul (formerly Wormald) valve actuator will physically mate with a Kidde cylinder valve but will not open the valve when the system is actuated. Ensure that each valve actuator is attached only to cylinders from the same manufacturer. See Halon 1301 technical manuals listed in Table 555-1-1 for additional component detail.

555-3.3.2.9 1-1/2 Inch Check Valve. This check valve is used to individually isolate the Halon cylinders of a multiple cylinder bank. These check valves prevent back flow into empty Halon cylinders.

555-3.3.2.10 Halon Nozzles. Halon nozzles control the rate of discharge from the system pipelines, thereby regulating the distribution of Halon throughout the compartment. The orifice size of the nozzle is determined by the volume of the portion of the space being protected, and the pressure available at the nozzle.

555-3.3.2.11 Actuation Line Filter. A 10 micron in-line filter is being installed in the CO_2 actuation system upstream of the time delay device to improve system reliability.

555-3.4 SPRINKLER SYSTEM COMPONENTS

555-3.4.1 COMPONENTS. Components listed in this section are installed to provide **cooling** in the following types of spaces:

a. Munitions

b. Pyrotechnics

Components in this section are installed to provide fire **extinguishment** in the following types of spaces:

a. Trash Burner and Stowage

b. Dry Cargo Hold

c. Aviation Tire and other selected Storerooms

d. Vital Area Perimeter (CIC, IOIC, NTDS)

e. Stores Conveyer Water Curtain

f. Berthing Space

555-3.4.2 SYSTEM TYPES. There are four types of sprinkling systems. The first three are dry type with a seawater operated control system, wet type with a seawater operated control system, and manually operated dry type. These three systems are normally found in magazines but are also installed where munitions are temporarily held in readiness. Dry type systems have been installed with open sprinklers, and wet type systems have been installed with closed sprinklers. The fourth type of system serves living spaces and selected storerooms, and is a manually operated system fitted with closed sprinklers (fragile glass bulb/fusible link). This type of system is normally fitted with a manual control valve.

555-3.4.3 VALVE USAGE AND CONTROL SYSTEMS. The sprinkling valves described in the next paragraph can generally be used in any system. The MIL-V-17501 type I, diaphragm operated valve cannot be used in dry type, oil operated systems. The automatic control systems components described in paragraph 555-3.4.7 can be used in any system. The control equipment for the dry type (seawater) and wet type (seawater) control systems are described in paragraphs 555-3.4.5 and 555-3.4.6, respectively. For a more detailed description of Magazine Sprinkler equipment, refer to publication NAVSEA S9522-AA-HBK-010.

555-3.4.4 SPRINKLER VALVES. Magazine sprinkler valves are normally closed, globe type valves which are designed to open upon actuation and supply seawater to the sprinkling system. Living and Storeroom sprinkler valves are normally manual 3-way plug type valves with open, close and test positions.

555-3.4.4.1 MIL-V-17501 Valves. The magazine sprinkler valves are built according to MIL-V-17501, with the exception of the electrically operated sprinkling control valves installed on battleships and cruisers. They may be either diaphragm operated (type I), piston operated (type II), or electrically operated. Type I and II valves are currently designed to open with a minimum operating pressure of 40 psig.

555-3.4.4.2 Type I and Type II Valves. The type I and II valves are similar in that they are held closed by the combined force of the valve spring and the firemain pressure acting on the top of the valve disk. Both types are hydraulically operated and may be controlled by hydraulic and automatic control systems. Seawater is used as the operating fluid for diaphragm operated valves. Either seawater or oil may be used as the operating fluid for piston operated valves.

555-3.4.4.3 Diaphragm Operated Valve. A typical diaphragm operated sprinkling valve is shown in Figure 555-3-6. These valves are manufactured in various sizes up to 8 inches. The main components of this valve are the main body, the Powertrol body, the diaphragm and the cover. The main body houses the valve seat and disk. The Powertrol body houses the lower diaphragm washer, the diaphragm chamber (operating pressure chamber), the operating pressure connection, the O-ring retainer bearing, and the stem. The cover houses the upper diaphragm washer, valve spring, and valve position indicator. An atmosphere vent is bored through the cover to give visual indication (liquid leakage) of a ruptured diaphragm.

555-3.4.4.4 Piston Operated Valve. A typical piston operated sprinkler valve is shown in Figure 555-3-21. The main components of this valve are the body, cover, and cylinder. The main body houses the valve seat and the disk. The cover is installed between the main body and cylinder. It serves as a guide for the valve stem and provides a seal between the line pressure in the valve body and the operating pressure in the cylinder. The cylinder houses the piston, an operating pressure chamber, the valve position indicator, and the valve spring. It also serves as the valve's cover. Two operating pressure connections are bored through the cylinder wall; however, only one connection is used when the valve is installed.

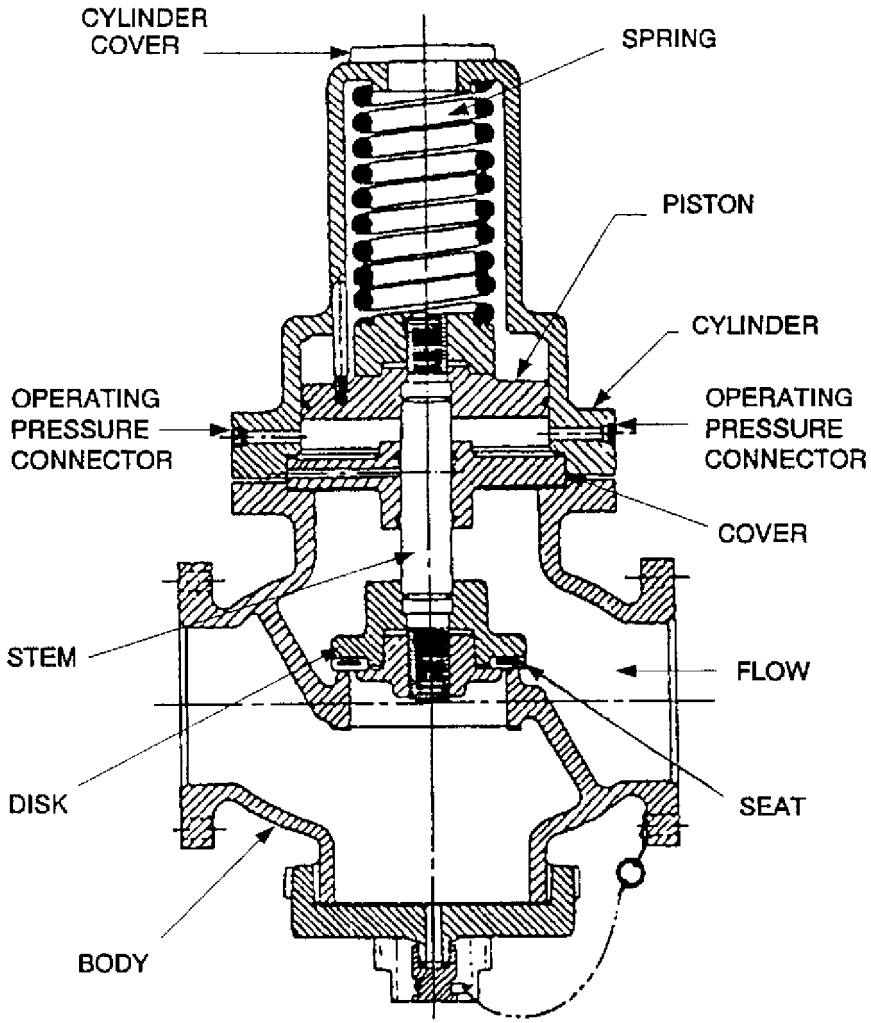

Figure 555-3-21 Piston Operated Magazine Sprinkler Valve

555-3.4.4.5 Electrically Operated Valves. The electrically operated control valves are globe type valves with electrically operated actuators. These are installed for sprinkling actuation to stowed projectiles on battleships and cruisers.

555-3.4.5 DRY TYPE SPRINKLER SYSTEM COMPONENTS (SEAWATER ACTUATOR). The following paragraphs describe dry type sprinkler system components which are operated by seawater.

555-3.4.5.1 Manual Control Valve (Three-Way Three-Position). This valve is a rotary disk plate type valve which is installed to permit rapid hydraulic operation of the sprinkler valve. One manual control valve is installed at each operating station.

555-3.4.5.2 Remote Control Valve, Hydraulically Operated. This valve is a diaphragm operated, globe type valve which is opened by operating pressure acting against the underside of the disk and closed by operating pressure acting on the top of the diaphragm. This valve permits the sprinkler valve to be secured from an operating station other than the one from which it was actuated. Additionally, this valve permits the sprinkler valve to be secured from any control station when it has been actuated automatically.

555-3.4.5.3 Spring Loaded Lift Check Valve. This valve is a spring loaded, diaphragm operated, lift check valve which closes tightly against the reverse flow and opens wide to permit flow in the normal direction. Spring loaded lift check valves permit the control system to be operated from more than one control station by preventing backflow through the other stations.

555-3.4.5.4 Hydraulically Operated Check Valve. The hydraulically operated check valve is a normally closed, diaphragm operated, globe type check valve which is opened by operating pressure in the close loop acting against the underside of the diaphragm. This valve permits the operating pressure to be vented from the diaphragm chamber of the magazine sprinkling valve, thereby permitting that valve to close rapidly and completely. The hydraulic operated check valve is normally installed in conjunction with a diaphragm operated sprinkling valve.

555-3.4.5.5 Power Operated Check Valve. The power operated check valve is a normally closed, piston operated, poppet type valve which is opened by operating pressure from the close loop of the operating pressure circuit acting against the piston. The power operated check valve is normally installed in conjunction with a piston operated sprinkler valve. When the power operated check valve opens, the operating pressure is released from the piston of the sprinkler valve, thereby permitting that valve to close completely.

555-3.4.5.6 Orifices. Two .098 inch diameter (number 40 drill) orifices are installed in the control system piping. The orifices are flat plates installed between flanges. The primary purpose of the orifices is to prevent a buildup of pressure in the control system piping as a result of leakage past a control system component. Additionally, the orifices serve to vent the operating pressure from the control system piping when the manual control valve is returned to the neutral position.

555-3.4.6 WET TYPE SPRINKLER SYSTEM COMPONENTS (SEAWATER ACTUATOR). The wet type sprinkler system uses some of the same components as the dry type system. Components that are identical to the dry type system are the manual control valves, remote control valve, spring loaded lift check, hydraulically operated check valve and orifices. In addition, there are some components that are unique to the wet type system. These are discussed in the following paragraphs.

555-3.4.6.1 Hydraulically Operated Control Valves. This valve is a globe type, diaphragm operated valve which is normally closed. Operating pressure from the actuating circuit is applied to the top of the diaphragm, causing the valve to operate (open). The function of this valve is to admit seawater at full firemain pressure (actuating circuit) into the diaphragm chamber of the sprinkling valve, thereby opening that valve. In order to perform this function, a hydraulically operated check valve is installed in a separate line which connects the diaphragm chamber of the sprinkler control valve directly to the firemain. Only one hydraulically operated control valve is installed in the hydraulic control system.

555-3.4.6.2 Three-Way Hydraulic Control Valve. The three-way hydraulic control valve is a diaphragm type valve which hydraulically controls the operation of the sprinkler head valves. When the control system is actuated, the three-way valve isolates the sprinkler head valves from the pressurized accumulator tank and releases the pressure holding those valves closed.

555-3.4.6.3 Sprinkler Head Valve. The sprinkler head valve is a combination sprinkler head and piston (or poppet) valve which is designed specifically for wet type sprinkler systems. The poppet seals the orifice in the valve body when the system is not in use and opens to permit sprinkling when the system is actuated. The sprinkler head atomizes the water and creates a spray.

555-3.4.6.4 Gravity Freshwater Accumulator Tank. This tank serves as a reservoir and provides a gravity head for the freshwater charge in the sprinkling system piping. The tank is installed in a compartment above the space protected by the sprinkler system.

555-3.4.6.5 Pressurized Freshwater Accumulator Tank. This tank serves as a reservoir for fresh water under 50 psig air pressure which holds the sprinkler head valves closed. The tank is installed in a compartment located above the space protected by the sprinkler system.

555-3.4.7 AUTOMATIC CONTROL SYSTEM COMPONENTS FOR MAGAZINE SPRINKLING SYSTEMS. The automatic control system contains the following components and may be used in any system.

a. Heat Sensing Devices (HSD)

b. Transmission Lines

c. Vented Check Valve

d. Pneumatically Released Pilot (PRP)Valve

555-3.4.7.1 Heat Sensing Device. The heat sensing device (HSD) is a thin walled spring loaded bellows containing air which is designed to create a pressure in response to either a rapid rise or a slow rise to 160°F.

555-3.4.7.1.1 HSD's are mounted on the overhead of the protected space and are connected to the manifold by individual 1/8-inch OD transmission lines. In the event of a fire which results in a rapid rise in temperature in the protected space, heat is absorbed by the HSD. The heat is conducted to the air within the bellows causing it to expand and create a pressure. The pressure is transmitted to the rear of the release diaphragm of the PRP thereby creating the differential pressure necessary to trip that valve.

555-3.4.7.1.2 In the event of a smoldering fire which results in a slow rise in temperature in the protected space, the pressure created within the bellows increases too slowly to trip the PRP. When the temperature reaches 160°F, the fusible link melts, thereby removing the restraint holding the bellows. The bellows then collapses under the action of the spring. The sudden compression creates a pressure impulse which is transmitted to the rear of the release diaphragm of the PRP thereby creating the differential pressure necessary to trip that valve.

555-3.4.7.2 Transmission Lines. The transmission lines which connect the thermopneumatic elements to the PRP are rockhide covered seamless copper tubing. This tubing is supplied by the manufacturers of the thermopneumatic devices.

555-3.4.7.3 Vented Check Valve. This valve is a brass, spring loaded, check valve which is designed to check against a rapid change of air pressure in one direction, and to open when air pressure is applied in the other direction. One vented check valve is installed in each transmission line from a HSD with the direction of flow arrow pointing toward the PRP. The check valves prevent the rapid increase in air pressure created in an individual or HSD from pressurizing the entire system. The check valve body contains a vent installed in a bypass around the main valve. The vent permits a slow backflow of air to equalize system pressure in response to normal changes in ambient temperature.

555-3.4.7.4 Pneumatically Released Pilot Valve (PRP). The PRP is a normally closed, spring loaded, pilot valve which opens automatically to actuate the sprinkler system in response to a pneumatic signal from one or more thermopneumatic elements.

555-3.5 AQUEOUS POTASSIUM CARBONATE (APC) SYSTEM COMPONENTS

555-3.5.1 GENERAL. Shipboard galley deep fat and doughnut fryers and their exhaust systems are protected by Aqueous Potassium Carbonate (APC) fire extinguishing systems. APC fire extinguishing systems are designed and built according to NAVSEA Standard Drawing 803-6397385.

555-3.5.2 BASIC SYSTEM COMPONENTS. The basic system consists of a cylinder assembly, discharge piping and nozzles, detector assemblies, a cable release system, a pressure release control box and cartridge, and often a remote manual control box (see Figure 555-2-14). The system is designed to be activated automatically by the detector assemblies, or manually at the cylinder assembly pressure release control box or remote manual control box.

555-3.5.2.1 System Types. There are five basic systems designated as A, AA, B, modified B, and BB. The A system uses a single cylinder assembly loaded with 2-1/2 quarts of extinguishing agent to supply four appliance nozzles. The AA system uses a dual cylinder assembly loaded with 5 quarts of extinguishing agent to supply two sets of four appliance nozzles (3/8-inch discharge tubing is used to supply the nozzles). The A and AA systems are designed for use with appliance nozzles only. The B system uses a single 6 gallon cylinder assembly loaded with 4 gallons of extinguishing agent to supply two appliances, two plenum range hoods, and two duct nozzles (5/8-inch discharge tubing is used to supply the nozzles). The ″modified″ B system uses a 6 gallon storage cylinder containing 4 quarts of extinguishing agent. The BB system uses a dual cylinder assembly. Each cylinder is loaded with 4 gallons of extinguishing agent, to supply appliance, plenum range hood, and duct nozzles (7/8-inch discharge tubing is used to supply the nozzles).

555-3.5.2.2 Cylinder Assembly. The cylinder assembly is composed of a cylinder, cylinder valve, lever control head, and pressure switch.

555-3.5.2.3 Cylinder. The cylinder is used to store the system fire extinguishing agent, which is a solution of potassium carbonate and water. The cylinder is charged to 175 psi with nitrogen gas, installed in an upright position, and located near the deep fat and doughnut fryers so that it is accessible to the operator. The modified B system is charged to 100 psi. The diameter of Types B, modified B and BB cylinders provided by the vendor had a diameter before 1989 of 8-1/4 inches. The diameter increased to 8-5/8 inches around 1989 and then to 8-7/8 inches around 1995. Ships may not be able to place a new cylinder in an existing bracket. The 8-1/4 inch and 8-5/8 inch diameter cylinders are not available from stock.

555-3.5.2.4 Cylinder Valve. The cylinder valve connects the cylinder assembly to the discharge system. The valve, when opened, allows the cylinder to discharge its extinguishing agent. A pressure gage which is mounted to the cylinder valve positioned so that the dial may be easily read, is used to monitor cylinder pressure.

555-3.5.2.5 Lever Control Head. The automatic or manual discharge of the cylinder assembly is controlled by the lever control head. One-fourth inch copper tubing from the pressure release control box is connected to the lever control head used for automatic operation. The lever control head's lever handle can also be used to manually discharge the cylinder assembly once the release pin is removed.

555-3.5.2.6 Pressure Switch. Each cylinder assembly is fitted with an appliance pressure switch to interrupt power to the deep fat and doughnut fryers when the cylinder is discharged or the pressure charge leaks off. Newer systems have two pressure switches. The cylinder assembly pressure switch actuates local alarms when cylinder pressure drops. The other pressure switch is installed in the APC distribution line to actuate remote alarms, secure ventilation, and interrupt power to the fryer when APC is discharged.

555-3.5.3 DISCHARGE SYSTEM COMPONENTS. The discharge system is designed to deliver the fire extinguishing agent to the nozzles. The basic design includes 5/8 or 3/8 inch OD CRES tubing and a vent plug. The vent plug is installed in a tee positioned in the discharge line and gets rid of any static pressure buildup.

555-3.5.3.1 Nozzles. The nozzles are used to distribute the extinguishing agent onto the fire. There are three nozzle types.

555-3.5.3.1.1 The appliance nozzle discharges onto the protected appliance.

555-3.5.3.1.2 The plenum range hood nozzle is centrally located in the plenum with its discharge port directed along the axis of the plenum. Each nozzle can protect up to 10 feet along the length of the plenum.

555-3.5.3.1.3 The duct nozzle is located inside of the exhaust duct with its discharge port directed along the axis of the duct.

555-3.5.3.1.4 Each nozzle is fitted with a strainer to remove particles that could clog a discharge port. Each nozzle discharge port is also protected by a foil sealing disk to prevent clogging of the port by grease or particles from the fryers.

555-3.5.3.2 Detector Assemblies. The detector assemblies control the automatic operation of the system. Fusible links, designed to melt at 360°F, join sections of the release cable. When a link melts, it releases the tension of the cable and allows the pressure release control box to activate the system. The appliance detectors are arranged in a straight line. One appliance detector is provided for each fryer and is mounted to the hood directly over the protected fryer. A duct detector, if fitted, is located in the exhaust duct. The duct detector is arranged in scissors fashion in order to locate the fusible link out into the exhaust system. The fusible links supplied with this system take one to three minutes to melt under optimum conditions.

555-3.5.3.3 Cable Release System. This system consists of release cable sections, conduit, corner pulleys, and mounting hardware. The release cable sections are lengths of 1/16-inch cable threaded through sections of conduits. Any change in cable direction is accomplished through the use of corner pulleys.

555-3.5.3.4 Pressure Release Control Box. The pressure release control box activates the cylinder assembly during automatic operation. The system can also be discharged manually from the pressure release control box. It includes the pressure release cartridge and the control box.

555-3.5.3.4.1 The pressure release cartridge consists of a cartridge, operating release lever, valve, and pressure gage. The cartridge is charged to 300 psi with nitrogen. The operating release lever is connected to the release cable turnbuckle and the extension spring. The lever operates the piston valve which is screwed into the cartridge and which controls the flow of nitrogen to the cylinder assembly through 1/4-inch copper tubing. A pressure gage attached to the cartridge provides a means to inspect the pressure.

555-3.5.3.4.2 The control box is the mounting platform for the pressure release cartridge and consists of a box with a hinged front panel containing an extension spring, release pin, and turnbuckle. The extension spring is attached to the operating release lever and is anchored to the wall of the box. One end of the turnbuckle is pinned to the operating release lever by a release pin which is secured with a wire and lead seal. The other end of the turnbuckle is connected to the release cable by a large screw eye.

555-3.5.3.5 Remote Manual Control Box. The remote manual control box houses the anchor for the cable release system. The release cable end is anchored to a U-bracket by a release pin. A wire and lead seal secures the release pin.

SECTION 4.
MANUAL FIREFIGHTING EQUIPMENT

555-4.1 DRY CHEMICAL POTASSIUM BICARBONATE FIRE EXTINGUISHER

555-4.1.1 GENERAL. Potassium bicarbonate dry chemical (PKP) is provided in portable (see Figure 555-4-1) 18 and 27 pound fire extinguishers in accordance with MIL-E-24091.

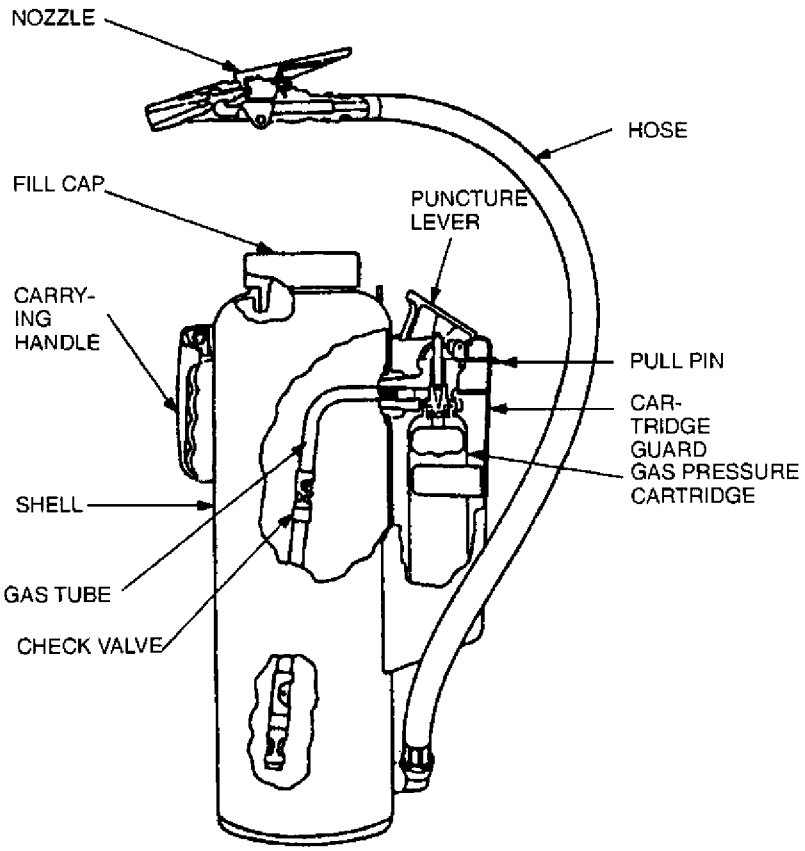

Figure 555-4-1 Typical Dry Chemical Fire Extinguisher

555-4.1.2 DESCRIPTION. The extinguishers are cartridge-operated type with the expellant gas [carbon dioxide (CO_2)] contained in a small gas pressure cartridge. The CO_2 cartridge is mounted on the outside of the extinguisher shell except the 27 pound LEHAVOT extinguisher, which has the CO_2 gas pressure cartridge mounted inside the shell.

555-4.1.3 OPERATION. The extinguisher shell, containing the charge of dry chemical is not pressurized until the extinguisher is to be used. Before approaching a fire, pull out the pull pin. Actuate the extinguisher with a sharp downward push on the puncture lever which is marked PUSH. This action causes the CO_2 stored in the small cartridge to fill the extinguisher. The squeeze grip on the nozzle may then be operated to discharge dry chemical from the extinguisher.

555-4.1.4 USE ON CLASS B FIRES. The dry chemical extinguisher is intended for use primarily on class B fires (flammable liquids). 18 pound portable PKP extinguishers have an effective range of 19 feet and minimum discharge time of 10 seconds. 27 pound extinguishers have an effective range of 21 feet and a minimum discharge time of 11 seconds in still air. The chemical discharge should be aimed at the base of the flames and applied in a rapid side to side sweeping motion chasing the flames across the surface of the liquid. In confined spaces, it is important that the dry chemical be discharged in short bursts as necessary. Unnecessarily long discharges will reduce visibility, render breathing difficult and waste the agent.

555-4.1.5 USE ON CLASS A AND CLASS C FIRES. Dry chemical should not be used on class C fires (energized electrical equipment) in place of CO_2 unless necessary, so as to avoid fouling of electrical and electronic components. This rule should also be applied to dry chemical use on internal fires for gas turbines and jet engines. Dry chemical may be used as a first aid fire control measure to effect flame knockdown on a class A fire. However, seawater or AFFF will be required to complete extinguishment.

555-4.1.6 GAS PRESSURE CARTRIDGE. The CO_2 cartridge supplies the propellant force to discharge dry chemical onto the fire. CO_2 is released through the gas tube when the puncture lever is depressed. The disk which is punctured by this operation is also a safety seal disk which will rupture at 4,050 to 4,500 psi internal pressure. This disk is held in position by a retaining nut which is hollow to accommodate the puncture pin. Consequently, discharge of CO_2 due to disk rupture or puncture of unattached cartridges will be directional and, unless precautionary measures are taken, will cause the cartridge to become a missile. For this reason an anti-recoil cap is installed for shipment and storage. This cap must remain in place until the cartridge is installed on the extinguisher.

WARNING

Do not exchange the safety disk of a CO_2 extinguisher and the CO_2 cartridge used with the PKP extinguisher. The safety disk furnished for CO_2 extinguisher cylinder valves is smaller in diameter than the dry chemical extinguisher cartridge disk and will easily go into the disk recess. The CO_2 extinguisher disk, however, is thinner and the hole in the dry chemical extinguisher cartridge retaining nut is larger. Consequently, the rupture pressure will be less than 2,650 psi. Use of CO_2 extinguisher disks as replacement for dry chemical CO_2 cartridge disks will result in an unsafe cartridge. The alteration of disks intended for use with dry chemical CO_2 cartridges to fit CO_2 extinguisher valves will result in unsafe CO_2 extinguisher cylinders.

Used cartridges should normally be returned for recharge and replacement of safety disks. If cartridges are recharged in the field, the safety disk and retaining nut must be obtained from the extinguisher manufacturer.

555-4.2 CARBON DIOXIDE FIRE EXTINGUISHER

555-4.2.1 GENERAL. CO_2 fire extinguishers and mounting brackets are installed in accordance with MIL-E-24269 (see Figure 555-4-2). One extinguisher is normally located within 30 feet of equipment with a high potential for electrical fire. Compartments that are normally outfitted with portable CO_2 extinguishers are shops, repair stations, flight deck catwalks, compartments containing electrical motors, switchboards and panels, electronic and navigational areas, weapons cleaning and fire control areas, galleys, and machinery spaces. Minesweepers have aluminum non-magnetic carbon dioxide fire extinguishers installed in accordance with MIL-E-24269, class 2, in lieu of mild-steel magnetic extinguishers. Amerex Model 331 Non-mag is the only aluminum non-magnetic carbon dioxide extinguisher approved for shipboard use.

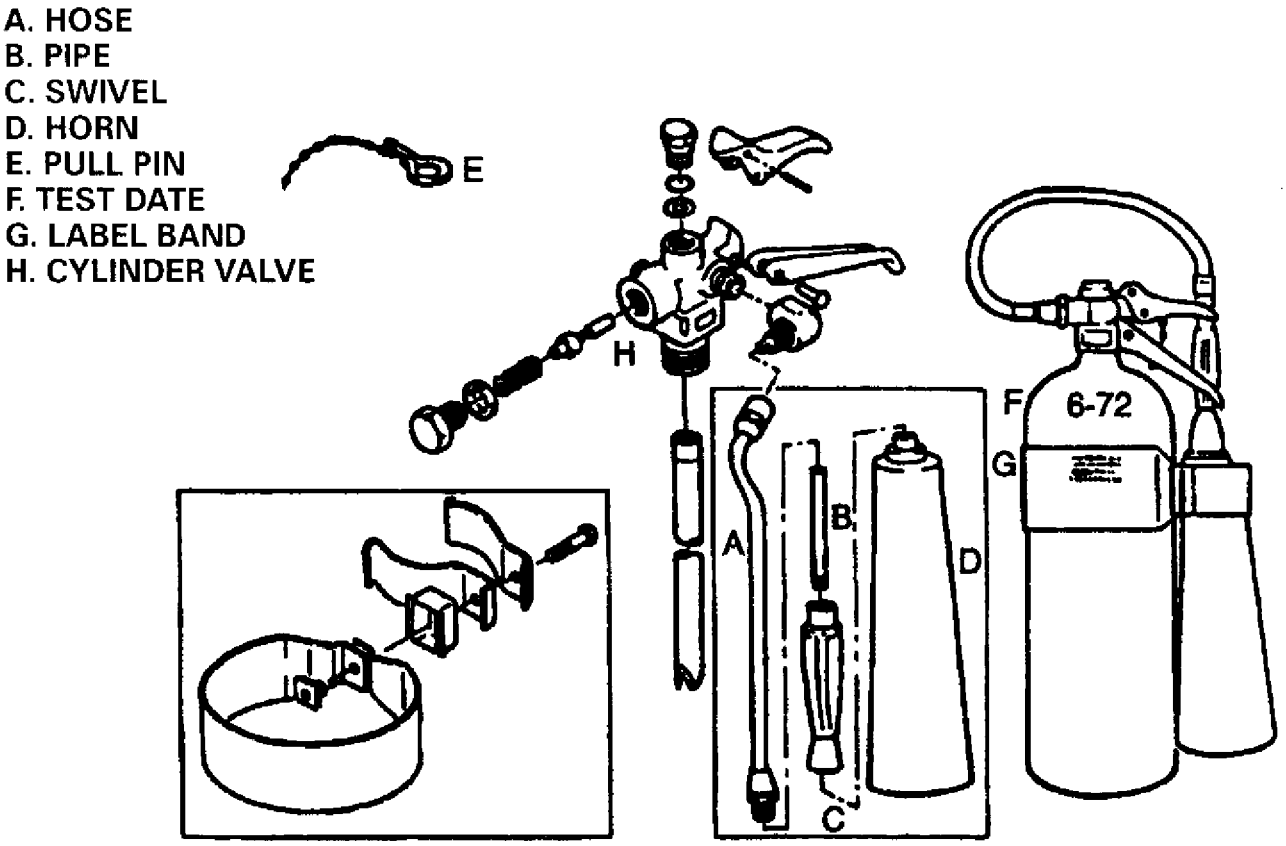

Figure 555-4-2 15-Pound Carbon Dioxide Extinguisher

555-4.2.2 DESCRIPTION. The standard Navy CO_2 fire extinguisher has a rated capacity (by weight) of 15 pounds of CO_2 . The CO_2 extinguisher is operated by removing the locking pin and squeezing the squeeze grip release valve. The squeeze grip release valve makes a tight seal when pressure on the grip is released; therefore, any unexpended CO_2 is held indefinitely without danger of leakage.

555-4.2.3 OPERATION. To operate the 15-pound CO_2 fire extinguisher, proceed as follows.

1. Carry the extinguisher in an upright position and get as close to the fire as possible.
2. Place the extinguisher on the deck and remove the locking pin from the valve.
3. Grasp the horn handle. Rapidly expanding CO_2 being expelled from the extinguisher causes the extinguisher to become quite cold. The horn handle is insulated to protect the user.
4. Squeeze the operating lever to open the valve and release CO_2 . Direct the flow of CO_2 toward the base of the fire. The maximum effective range of a 15-pound CO_2 extinguisher is 4 to 6 feet from the outer end of the horn. In continuous operation, the 15-pound CO_2 extinguisher will be expended in approximately 40 seconds.
5. When conditions permit, close the valve. Continue to open and close the valve as the situation requires. When continuous operation is necessary, or when the valve is to remain open for recharging, slip the D-yoke ring, which is on the carrying handle, over the operating handle. The operating handle should be in the depressed position when the D-yoke ring is put on it. The D-yoke permits continuous operation of the extinguisher as long as any CO_2 remains.

WARNING

To avoid shock from static electricity, ground the cylinder to the deck when discharging CO_2 , whenever practical.

555-4.2.4 USE ON CLASS B AND C FIRES. Carbon dioxide (CO_2) portable fire extinguishers are used primarily for small electrical fires (class C) and have limited effectiveness on class B fires. Their use shall be confined to class B fires no greater than four square feet. Successful operation requires close approach due to the extinguisher's characteristic short range (4 to 6 feet), see paragraph 555-10.3.2.2. See paragraph 555-8.2.2 for class C fire guidance.

555-4.2.5 STATIC ELECTRICITY EXPLOSIVE HAZARDS. High Velocity CO_2 streams are prolific generators of static electricity because of solid particles (CO_2 snow) in the stream. A jet or stream that contains solid or liquid particles and issues from a nozzle, pipe or hose, at high velocity will probably accumulate static charge after leaving the transfer line. If the discharge occurs in the presence of a flammable vapor-air mixture there will be danger of fire or explosion. The introduction of high velocity streams into tanks containing flammable vapor-air mixtures produces a serious danger of fire or explosion if such mixtures are within their various flammable limits. Grounding of the tank and/or discharge nozzle will not preclude the danger of fire or explosion.

WARNING

Use of CO_2 fire extinguishers for the purpose of inerting tanks or spaces that have contained hydrocarbon products is prohibited.

555-4.2.5.1 Inerting operations shall be in compliance with NAVSEA S6470-AA-SAF-010, U.S. Navy Gas Free Engineering Program.

555-4.2.6 WEIGHING, TESTING AND RECHARGING CARBON DIOXIDE CYLINDERS (PORTABLE 15 POUND). Once a 15-pound cylinder has been used, it should be recharged before it is returned to stowage. The

15-pound cylinders are recharged from 50-pound commercial CO_2 cylinders that are carried aboard most naval ships for this purpose. CO_2 cylinders should be recharged in a well ventilated space.

555-4.2.6.1 Weighing Cylinders. CO_2 fire extinguishers must be weighed after filling, in accordance with PMS. The 50 pound CO_2 cylinders that are used to recharge the 15 pound portable cylinders must be weighed at the required intervals and replaced when necessary.

555-4.2.6.2 Hydrostatic Testing of Carbon Dioxide Cylinders (Portable 15 Pound). Portable carbon dioxide fire extinguishers shall periodically undergo hydrostatic testing. Such testing must be done at a shore facility certified by the Department of Transportation. Forces afloat are not authorized to hydrostatic test portable fire extinguishers.

555-4.2.6.2.1 Installed (ready to use) carbon dioxide extinguishers. Installed CO_2 extinguishers are periodically examined in accordance with the planned maintenance system for the last hydrostatic test date stamped into the cylinder dome. A CO_2 extinguisher which does not require recharging will be turned in for hydrostatic testing if at least twelve years has elapsed since the last test date.

555-4.2.6.2.2 Discharged carbon dioxide extinguishers. Personnel aboard ship responsible for recharging portable fire extinguishers will examine empty discharged CO_2 fire extinguishers for the last hydrostatic test date stamped into the cylinder dome. The empty CO_2 extinguisher shall be sent ashore for hydrostatic testing if at least five years have elapsed since the last hydrostatic test date.

555-4.2.6.3 Transferring Carbon Dioxide. A CO_2 transfer unit (see Figure 555-4-3) is provided for transferring CO_2 from a 50-pound cylinder to 15-pound cylinders. The transfer unit consists of an electric motor, a pump, a high pressure hose, a control valve, adapters and fittings.

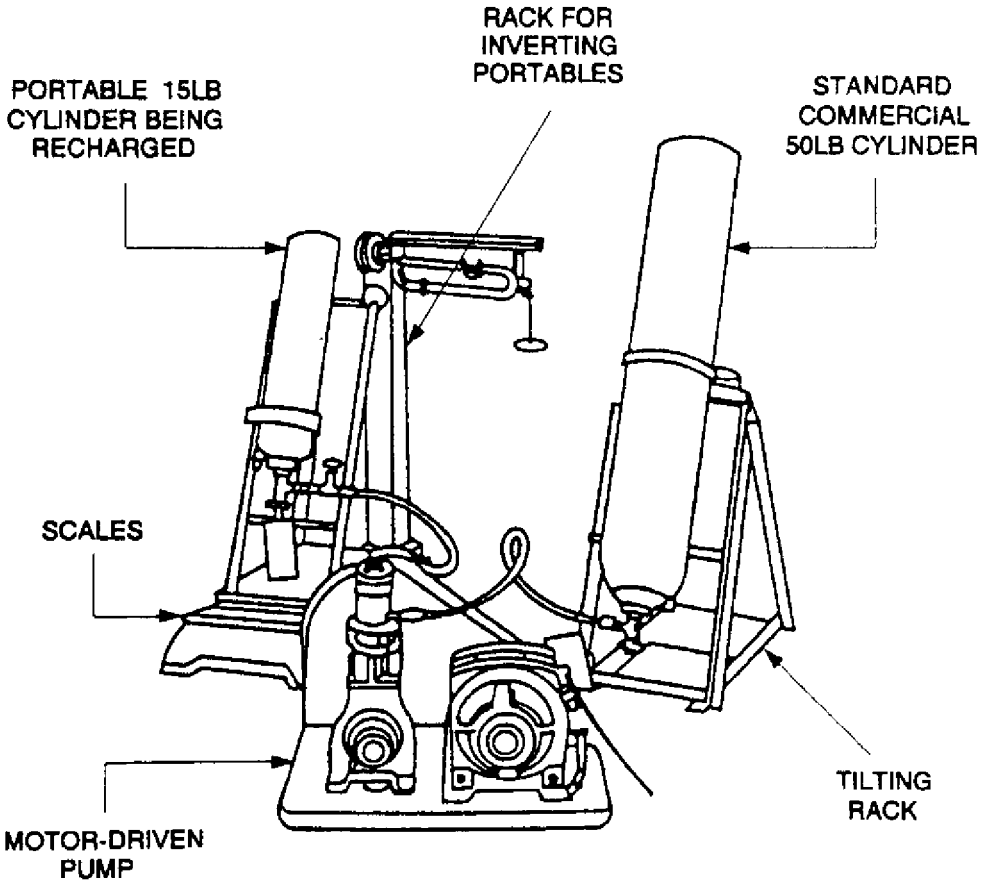

Figure 555-4-3 Carbon Dioxide Transfer Unit

555-4.2.6.3.1 Before operating the CO_2 transfer unit, be sure that the switch on the side of the motor is in the OFF position. Check the circuit from which the motor is to be energized and make certain that it is the same as that indicated on the nameplate on top of the motor. If 220-volt, 60-cycle, single phase current is available, the hookup of the motor leads should be rearranged so that the motor will operate on this circuit. A wiring diagram for operation on 220-volts is located on the motor nameplate. Check all CO_2 connections on both the inlet hose and outlet hose (the 6-foot long hose is the pump outlet hose). Make certain that all connections between the fittings are tight. This is very important, because the CO_2 is stored under high pressure.

555-4.2.6.4 Operating the Transfer Unit. To operate the transfer unit, proceed as follows:

1. With the transfer unit, scale, and tilt racks in place, check the supply cylinder. Use only the 50-pound commercial cylinders. The cylinder shall be inverted.
2. Connect the pump inlet hose to the supply cylinder outlet. The connection adapter of the hose is fitted with a screen to prevent the entrance of any foreign matter into the transfer unit or into the cylinder being recharged. Do not open the supply cylinder valve.
3. Place the empty cylinder on the scale. If a rack is used, invert the cylinder in a near vertical position; otherwise set it horizontally.
4. Connect the pump outlet hose to the recharging adapter. The pump outlet hose is fitted with a shutoff valve.

Check all connections to ensure that they are correct and secure. All connections should be made with a wrench, using a slow, steady pulling motion. Do not jerk the wrench and do not hit it with a hammer.

5. After making certain that the shutoff valve in the pump outlet hose is tightly closed, and the valve of the cylinder to be recharged is in the open position, completely open the valve of the supply cylinder.
6. Balance the scale and note the weight of the cylinder being recharged. When using beam-type scales, set the scale to the weight of the empty cylinder plus the desired charge.
7. Open the shutoff valve in the pump outlet hose and allow the CO_2 in the supply cylinder to flow under its own pressure into the cylinder being recharged.
8. When the weight of the cylinder being recharged stops increasing, the CO_2 has stopped flowing under its own pressure from the supply cylinder. At this point, start the transfer unit and watch the scale carefully. The transfer pump should be started only when all valves are verified correctly aligned; otherwise, over-pressurization in the transfer system may rupture the neoprene seal.

CAUTION

Do not close the valve of the cylinder being recharged or the shutoff valve in the pump outlet hose while the transfer unit is pumping.

9. When the full capacity of the cylinder being recharged has been reached, perform the following operations in rapid succession.
   a Stop the transfer unit motor.
   b Tightly close the shutoff valve in the pump outlet hose.
   c Close the valve of the cylinder being recharged.
10. Disconnect the hose from the cylinder being recharged. Do this very slowly to allow the escape of the CO_2 that is trapped between the shutoff valve and the cylinder being recharged. Then, remove the adapter.
11. Weigh the recharged cylinder carefully. Note the charged weight on the cylinder record card.
12. After recharging is complete, close the supply cylinder valve tightly. Open the shutoff valve in the pump outlet hose very slowly and allow all the CO_2 in the unit to be discharged to the atmosphere.

555-4.2.6.5 Planned Maintenance System. The CO_2 transfer unit should be maintained according to the manufacturer's instructions.

555-4.3 AQUEOUS FILM FORMING FOAM FIRE EXTINGUISHER

555-4.3.1 GENERAL. Aqueous film forming foam (AFFF) fire extinguishers are provided in accordance with MIL-E-24652 to vapor secure a small fuel spill to prevent a fire, to extinguish a small class B fire (including a deep fat fryer fire), to extinguish a small class A fire and for use in standing fire watch during hotwork. AFFF extinguishers are typically located throughout submarines and at Damage Control Repair Stations and near deep fat fryers on surface ships.

555-4.3.2 DESCRIPTION. The portable AFFF fire extinguisher is a stainless steel cylinder that stores 2-1/2 gallons of a premixed solution of AFFF concentrate and fresh water (see Figure 555-4-4). It is pressurized with air to 100 psi at 70°F and weighs approximately 28 pounds when fully charged. AFFF is discharged from the bottom of the cylinder, through the siphon tube, extinguisher valve, and discharge hose to the nozzle. The solu-

tion undergoes an expansion of about 6.5 to 1 when passing through the nozzle, which produces around 16 gallons of expanded AFFF and water solution (foam) after discharge. The AFFF fire extinguisher has a 55 to 65 second continuous discharge time, and an initial range of 15 feet which decreases during discharge.

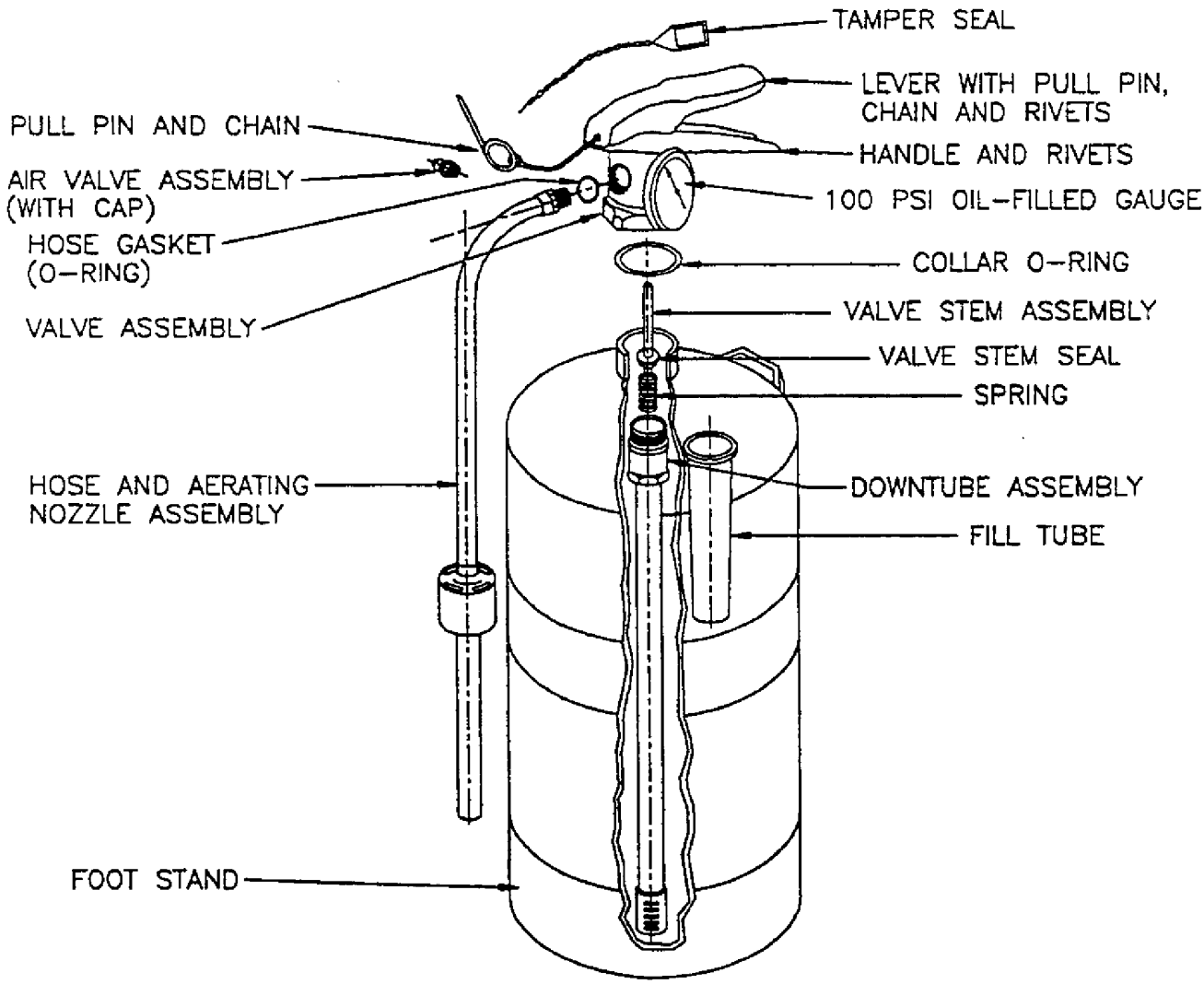

Figure 555-4-4 Typical Portable Aqueous Film Forming Foam Fire Extinguisher

555-4.3.3 OPERATION. For use against a deep fat fryer, see paragraph 555-8.4. To vapor secure a small fuel spill and for use against a small class A or class B fire, the following guidance applies:

a. The AFFF fire extinguisher is intended for use on class B pool fires. AFFF can also be used on class A fires. It is not recommended for use on class C fires. However, an AFFF extinguisher can be used on a class C fire if the nozzle is kept at least four feet from the energized electrical source.

b. Before approaching the fire, ensure that the pressure indicated on the pressure gage is within the indicated range and pull the pull pin on the extinguisher valve. Hold the extinguisher by the carrying handle with one hand and hold the discharge hose just above the nozzle with the other hand. To operate, squeeze the operating lever to the carrying handle. The extinguisher is capable of continuous operation or multiple bursts.

c. AFFF extinguishes class A fires by cooling. It is superior to water because AFFF has added wetting and penetrating ability. For small class A fires, apply the AFFF to the base (source) of the fire.

d. AFFF extinguishes a class B fire or protects an unignited fuel spill by floating on the flammable liquid and forming a vapor seal. One AFFF extinguisher will effectively extinguish 20 square feet, (4-1/2 feet by 4-1/2 feet) of flammable liquid fire. To apply, start 15 feet away and sweep the AFFF from side to side at the base of the fire. One AFFF extinguisher can be used to vapor secure a fuel spill to prevent a fire up to 40 square feet (approximately 6 feet by 6 feet) in size. The fuel spill should be confined, within direct stream reach of the AFFF extinguisher and entirely visible. A fuel spill which is spread over an area larger than 40 square feet, is not accessible or entirely visible, warrants use of a 1-1/2 inch AFFF hose or AFFF bilge sprinkling system.

555-4.4 FIRE HOSE STATIONS AND FIREPLUGS

555-4.4.1 GENERAL. A fire hose station is the location of a fireplug and associated equipment. A fireplug is the valve at a fire hose station. A fire hose station is commonly referred to as either a fire station or fireplug. Branches of the firemain system supply water to fire hose stations throughout the ship (see Figure 555-4-5). Generally, fire hose stations have size 1-1/2 inch fireplugs for frigates and smaller ships and size 2-1/2 inch fireplugs for ships larger than frigates. See Table 555-4-1, Table 555-4-2, and Table 555-4-3 for typical fire hose station equipment.

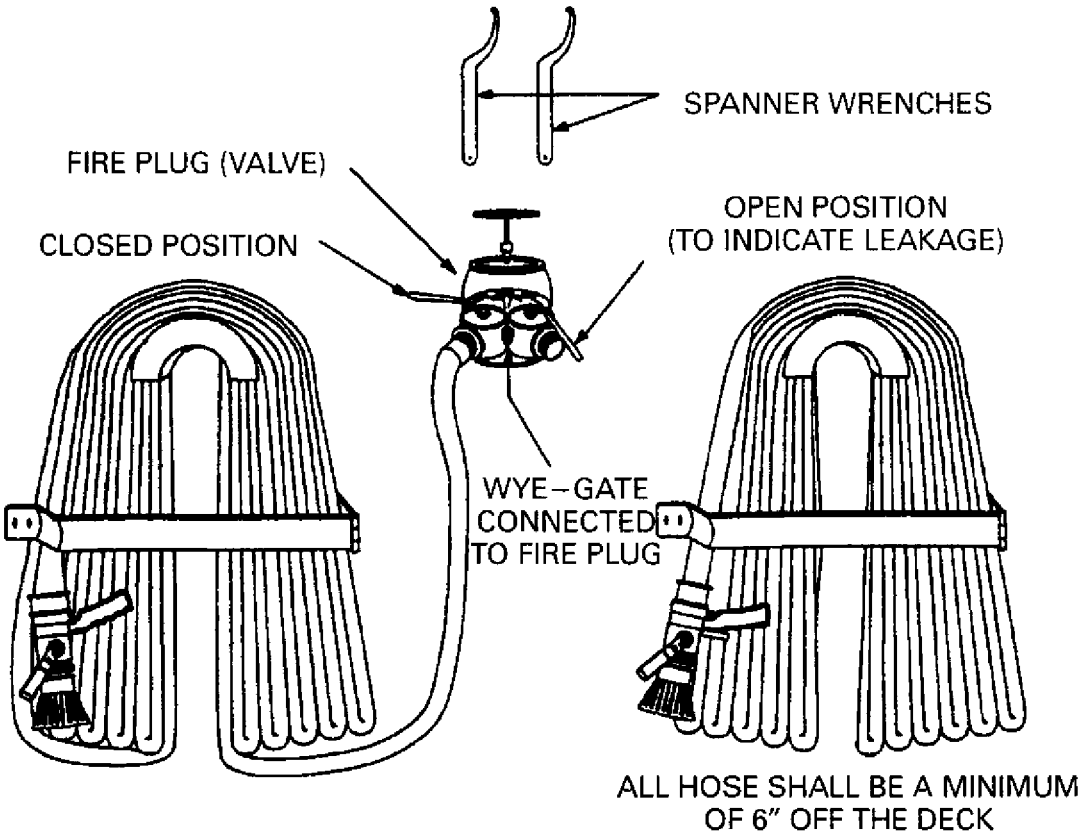

Figure 555-4-5 Typical Fire Hose Station

Table 555-4-1 TYPICAL EQUIPMENT FOR FIRE HOSE STATIONS (OUTSIDE OF MACHINERY SPACES) ON LARGE SHIPS

Item	Fire Hose Stations Location and Quantity			NAVSEA Drawing No. or Spec No.
	Weather areas of main weather deck	Lower decks	Superstructures	
2-1/2 inch hose valve (fire-plug)	1	1	1	803-1385712
2-1/2 by 1-1/2 by 1-1/2 inch Wye-gate	0	1 (note 4)	1	MIL-C-52404
2-1/2 inch hose (50-foot length)	2 (note 1)	0 (note 5)	0	MIL-H-24606
1-1/2 inch hose (50-foot length)	0	4 (note 6)	2 (note 8)	MIL-H-24606
2-1/2 inch nozzle, adjustable (vari-)	1 (note 2)	0 (note 7)	0	MIL-N-24408
1-1/2 inch nozzle, adjust-able, 95 gal/min (vari-)	0	2 (note 2)	2 (note 2)	MIL-N-24408
1-1/2 inch nozzle, all pur-pose	0 (note 3)	0	0	803-1385834
1-1/2 inch fog applicator (10 foot)	(note 3)	0	0	803-5959223
2-1/2 by 1-1/2 inch reducer	(note 3)	0	0	MIL-C-52404
hose rack (50-foot)	0	0	2	804-860089
hose rack (100-foot)	1	2	0	(note 9)
wrench, spanner	2	2	2	810-4444647
AFFF inline eductor	(note 10)	(note 10)	(note 10)	MIL-E-24759
AFFF concentrate, 5 gal. can	(note 10)	(note 10)	(note 10)	MIL-F-24385

Notes:

1. Three lengths of hose at fire hose stations on aircraft carrier flight decks in way of maximum width.
2. An adjustable (vari-) nozzle shall be attacked to the end of each hoseline.
3. A 1-1/2 inch Navy all purpose nozzle, 10-foot fog applicator, and 2-1/2 by 1-1/2 inch reducer shall be bulkhead mounted as a secondary nozzle at the fire hose station which serves a Naval gun, 3 inches or larger, with a label which reads ″NAVY ALL PURPOSE NOZZLE AND APPLICATOR - FOR HOT GUN COOLING″.
4. Wye-gate not provided on fireplugs assigned for hangar coverage.
5. Two hose lengths at fire hose stations provided for hangar coverage.
6. Two 50-foot lengths connected to one outlet for the Wye-gate.
7. One nozzle at fire hose stations provided for hangar coverage.
8. One 50-foot length connected to one outlet of the Wye-gate.
9. Rack assembly to suit size and length of hose specified.
10. Ships are authorized to pre-install an AFFF inline eductor and AFFF concentrate at fire hose stations, where they determine a need exists, for fighting class B fires (see paragraph 555-9.4). The eductor may be mounted adjacent to the fire hose station or may be pre-connected to an outlet. Two 5-gallon cans of concentrate are typically provided with each AFFF inline eductor.

Table 555-4-2 TYPICAL EQUIPMENT FOR FIRE HOSE STATIONS (OUTSIDE OF MACHINERY SPACES) ON SMALL SHIPS

Item	Fire Hose Stations Location and Quantity			NAVSEA Drawing No. or Spec No.
	Weather areas of main weather deck	Lower decks	Superstructures	
1-1/2 inch hose valve (fireplug)	1	1	1	803-1385711
1-1/2 inch hose (50-foot length)	2 (note 1)	2 (note 1)	2 (note 1)	MIL-H-24606
1-1/2 inch nozzle, adjustable, 95 gal/min (vari-)	2 (note 2)	2 (note 2)	2 (note 2)	MIL-N-24408
1-1/2 inch nozzle, all purpose	0 (note 3)	0	0	803-1385834
1-1/2 inch fog applicator (10 foot)	0 (note 3)	0	0	803-5959223
hose rack (50-foot)	2	2	2	804-860089 (note 4)
wrench, spanner	2	2	2	810-4444647
AFFF inline eductor	(note 5)	(note 5)	(note 5)	MIL-E-24759
AFFF concentrate, 5 gal. can	(note 5)	(note 5)	(note 5)	MIL-F-24385

Notes:
1. One 50-foot length connected to the fireplug.
2. An adjustable (vari-) nozzle shall be attacked to the end of each hoseline.
3. A Navy all purpose nozzle 10-foot fog applicator shall be bulkhead mounted at the fire hose station which serves a Naval gun, 3 inches or larger, with a label which reads ″NAVY ALL PURPOSE NOZZLE AND APPLICATOR - FOR HOT GUN COOLING″.
4. Rack assembly to suit size and length of hose specified.
5. Ships are authorized to pre-install an AFFF inline eductor and AFFF concentrate at fire hose stations, where they determine a need exists, for fighting class B fires (see paragraph 555-9.4). The eductor may be mounted adjacent to the fire hose station or may be pre-connected to an outlet. Two 5-gallon cans of concentrate are typically provided with each AFFF inline eductor.

Table 555-4-3 TYPICAL EQUIPMENT FOR FIRE HOSE STATIONS IN MACHINERY SPACES (ALL SHIPS)

Item	Quantity	NAVSEA Drawing No. or Spec No.
1-1/2 inch hose valve (fireplug)	1	803-1385711
1-1/2 inch hose (50-foot length)	1	MIL-H-24606
1-1/2 inch nozzle, adjustable, 95 gal/min (vari-)	1	MIL-N-24408 type I
hose rack (50-foot)	1	804-860089 (note 1)
wrench, spanner	2	810-4444647

Note:
1. Rack assembly to suit size and length of hose.

555-4.4.2 SHIPS WITH 2-1/2 INCH FIREPLUGS. Fire hose stations are installed on ships requiring size 2-1/2 inch fireplugs in quantity and location to permit reaching any weather area of main weather decks and any area

on the lower decks from at least two fire hose stations with 100 feet of hose. On superstructures, fire hose stations are installed to permit reaching any area from two fire hose stations with 50 feet of hose.

555-4.4.3 SHIPS WITH 1-1/2 INCH FIREPLUGS. Fire hose stations are installed on ships requiring size 1-1/2 inch fireplugs in quantity and location to permit reaching any main weather deck area or below deck area from at least two fire hose stations with 50 feet of hose. Coverage of all areas of the superstructure are provided from at least two fire hose stations with 50 feet of hose.

555-4.4.4 ADDITIONAL REQUIREMENTS. In addition, fire hose stations are normally at the following locations.

a. Two fire hose stations in each watertight subdivision containing ammunition transfer areas.

b. At least two fire hose stations with 150 feet of hose on ships having flight decks in way of maximum width.

c. One fire hose station in the immediate vicinity of spaces where munitions are stowed, handled or serviced.

d. In machinery spaces, fire hose stations are installed to provide coverage of all areas with 50 feet of hose from a minimum of one station.

e. Two fire hose stations are installed to facilitate washdown of anchor and chain.

f. Fire hose stations in the vicinity of the missile launcher are located to permit combatting a fire within the launcher with three hoselines, each 50 feet in length.

555-4.4.5 IDENTIFICATION REQUIREMENTS. All fireplugs and fireplug handwheels are painted red. In addition, each fireplug is identified by a three number locator. These numbers are, in order, the deck, the frame, and the transverse location. Transverse location numbers are even to port and odd to starboard, with higher number outboard of lower numbers.

555-4.5 FIRE HOSE

555-4.5.1 STANDARD NAVY HOSE. The standard Navy fire hose is a double jacketed synthetic fiber with a rubber or similar elastomeric lining. The outer jacket is impregnated to increase wear resistance. The impregnating material contains an orange colored pigmentation for easy identification. The hose is manufactured to meet the requirements of MIL-H-24606 and is available in sizes 1-1/2 through 4 inches diameter in 50 foot lengths. Navy fire hose has a maximum operating pressure of 270 psi with optimum hose handling characteristics occurring between 90 and 150 psi. Pressures above 150 psi are hazardous because excessive nozzle reaction force may result in loss of nozzle control.

555-4.5.2 NON-COLLAPSIBLE RUBBER HOSE. For the Aqueous Film Forming Foam (AFFF) hosereel system, rubber covered, noncollapsible hose is used. The noncollapsible hose is manufactured according to MIL-H-24580 and is available in 3/4-inch and 1-1/2 inch size. The length of these hoses varies depending upon application and location.

555-4.5.3 HOSE FITTING THREADS. Hose fitting threads are according to FED-STD-H28/10 as shown in Table 555-4-4.

Table 555-4-4 HOSE FITTING THREADS

Size	Threads Per Inch	Designation
3/4	11-1/2	NH (Garden Hose)
1-1/2	11-1/2	NPSH
2-1/2	7-1/2	NH
3	6	NH
4	4	NH

555-4.5.4 HOSE STOCK NUMBERS. National Stock Numbers for the various fire hoses are listed as follows:

a. MIL-H-24606 (Synthetic Jacket Soft Hose)
   1 1-1/2 inch by 50 feet, 4210-01-131-0249
   2 2-1/2 inch by 50 feet, 4210-01-131-0247
   3 1-1/2 inch by 25 feet, 4210-01-264-3871

b. MIL-H-24580 (Rubber Covered Noncollapsible)
   1 3/4 inch by 50 feet, 4210-01-076-8203
   2 1-1/2 inch by 50 feet, 4210-01-075-7324
   3 1-1/2 inch by 75 feet, 4210-01-355-3265
   4 1-1/2 inch by 125 feet, 4210-01-076-3289
   5 1-1/2 inch by 150 feet, 4210-01-075-7325

c. No specifications (rubber covered flight deck hose); 1-1/2 inch by 50 feet, 4210-00-935-5432; 2-1/2 inch by 50 feet, 4210-00-935-5433.

555-4.5.5 SUCTION HOSE FOR PORTABLE PUMPS. Suction hose for P-100 portable pumps shall be used for its intended purpose only (see paragraph 555-4.11).

555-4.5.6 FAKING AND STOWING THE FIRE HOSE

555-4.5.6.1 Fire Hose at the Fire Hose Station. Fire hose that is not in use is stowed in repair lockers or is faked on racks attached to bulkheads. When two hose lines are faked beside a fireplug at a fire hose station, the general practice is to leave one unconnected and the other connected. However, in certain small compartments, 50 feet of hose is supplied. The line is always faked in the rack with the ends hanging downward so that the couplings and nozzles are immediately at hand. The bottom of the folds should be at least 6 inches above the deck to prevent chafing the hose.

555-4.5.6.2 Stowing a Hose. Hose to be stowed is rolled into a coil and sometimes tied with a small line. The coil is made by first laying the hose out on deck and doubling it so that the male end reaches 3 to 5 feet from the female end. The rolling is started at the fold, which is rolled inward on the part of the hose leading to the male end. The completed coil then has the female end of the hose on the outside, and about 3 feet behind, the male end of the hose. The male coupling is therefore protected from damage to its thread. The double roll also allows the female couple to be connected and the hose run out without twisting (see Figure 555-4-6).

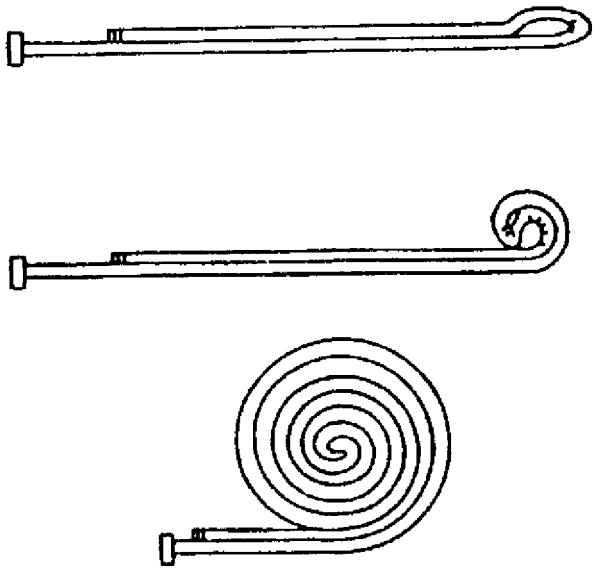

Figure 555-4-6 Preparing Fire Hose for Storage

555-4.5.7 HOSE MAINTENANCE. The synthetic jacketed soft hose (MIL-H-24606) and non-collapsible AFFF hose (MIL-H-24580) will not deteriorate due to prolonged exposure of the jacket to water. The AFFF hoses (refer to MIL-H-24580) are composed of materials which will withstand the higher ambient temperatures to which the hoses are exposed when installed in machinery spaces. Continuous exposure to fuels and lubricants will soften the rubber components of fire hose. However, these effects can be negated by washing the exposed area as soon as practical after exposure. Hose couplings can be damaged by excessive abuse such as being dropped or being dragged around the deck. Also, hose fitting threads can be damaged by cross threading. Cotton jacket fire hose, per ZZ-H-451, is obsolete; if found, replace with synthetic jacketed fire hose. The cotton jacketed hose will suffer fungus rot if it remains wet.

555-4.6 FIRE HOSE FITTINGS

555-4.6.1 GENERAL. Fire hose fittings used for assembling hose lines aboard ship consist of the female coupling, the male coupling, the double female coupling, and the double male coupling. Two reducing couplings are used, the straight reducing coupling and the wye-gate for reducing to two small lines. The straight increasing coupling is also used. All hose couplings for fire hose on navy ships are made with uniform thread dimensions. They have an unobstructed waterway that is the full diameter of the hose. Rubber gaskets in female couplings should not protrude into the waterway. The couplings are made fast to the hose ends by means of expansion rings, which are set inside the hose and forced against the coupling (see Figure 555-4-7).

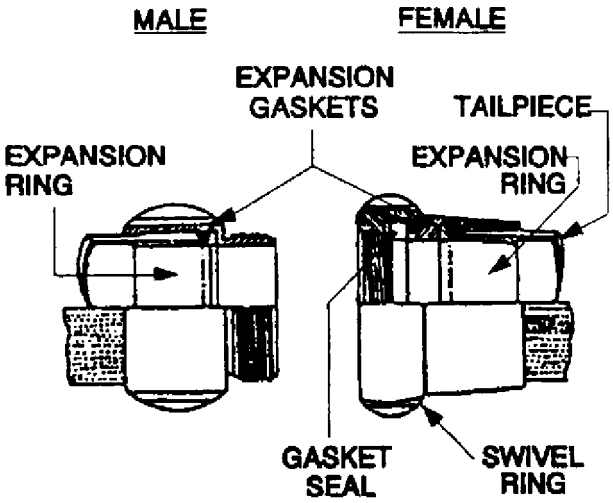

Figure 555-4-7 Fire Hose Couplings

555-4.6.2 DOUBLE FEMALE COUPLING. The double female coupling (see Figure 555-4-8), either 2-1/2 or 1-1/2 inches in diameter, is furnished to connect two male couplings, to make jumper line assemblies, and to connect a male coupling to a fireplug. Both ends are identical, with swivels and gaskets.

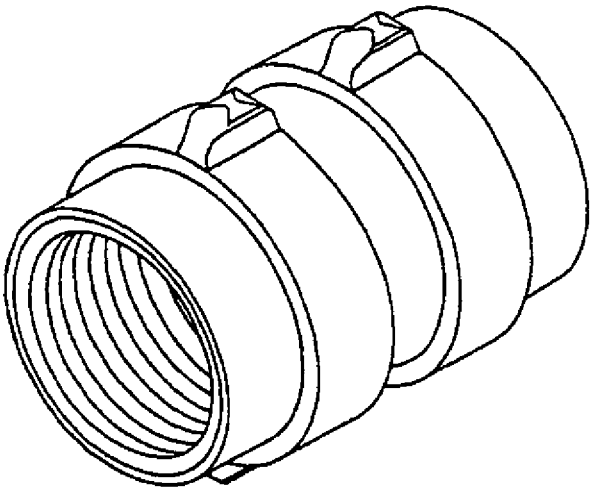

Figure 555-4-8 Double Female Coupling

555-4.6.3 DOUBLE MALE COUPLING. The double male coupling, 2-1/2 or 1-1/2 inches in diameter, is furnished to connect two female couplings, and to make nozzle connections on female outlets (see Figure 555-4-9).

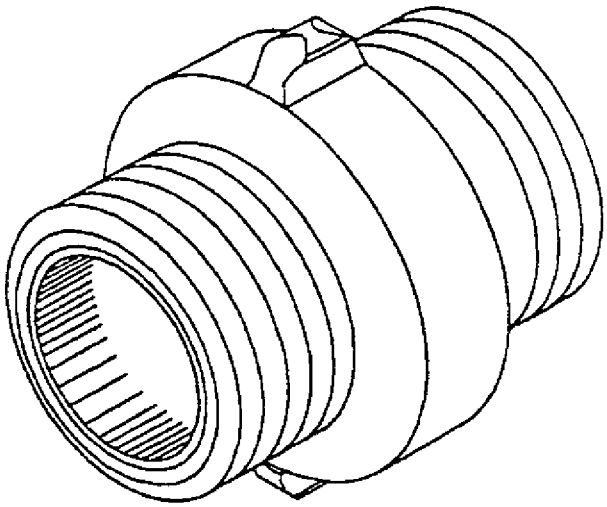

Figure 555-4-9 Double Male Coupling

555-4.6.4 STRAIGHT REDUCER COUPLING. The straight reducer coupling serves to reduce a 2-1/2 inch size fireplug or hose line to a 1-1/2 inch size. It has female threads at the large opening and male threads at the small opening (see Figure 555-4-10).

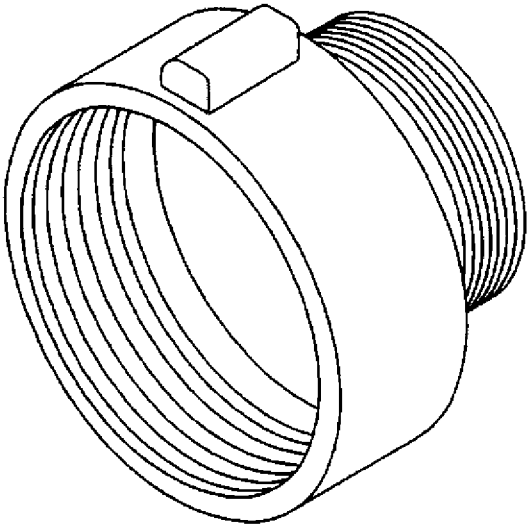

Figure 555-4-10 Straight Reducer Coupling

555-4.6.5 STRAIGHT INCREASER COUPLING. The straight increaser coupling serves to increase a 1-1/2 inch size to 2-1/2 inch size, either on a fireplug, hose line, or a pressure proportioner. It has female threads at the small opening and male threads at the large opening (see Figure 555-4-11).

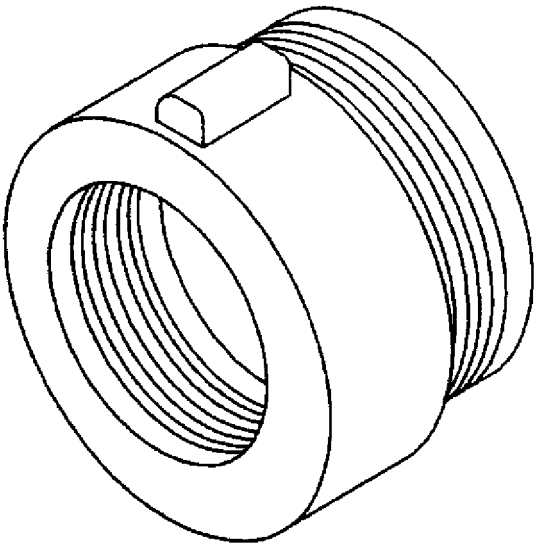

Figure 555-4-11 Straight Increaser Coupling

555-4.6.6 WYE-GATE. The wye-gate is used to reduce a 2-1/2 inch line to two 1-1/2 inch lines. The standard wye-gate is equipped with two stop valves, so that either line can be controlled independently of the other (see Figure 555-4-12). Where a wye-gate is installed on a fireplug with one hose connected, the outlet (gate) with no hose will normally be left open as a telltale for a leaking fireplug valve. Close the open outlet before opening the fireplug.

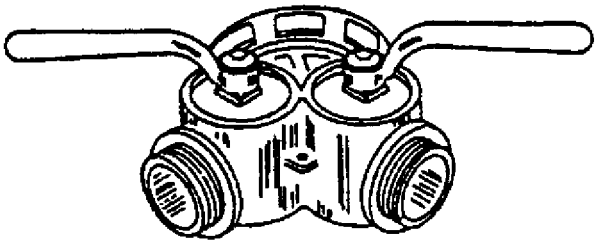

Figure 555-4-12 Wye-Gate

555-4.6.7 INTERNATIONAL SHORE CONNECTION. The international shore connection allows charging of the firemain from shore in any U.S. or overseas port. The bolt slots allow connection between flanges of different bolt circles. At least two are stored in a damage control repair station. A 2-1/2 inch NH male-threaded shore connection is available as NSN 4730-00-932-4753. Shore connections are made in accordance with ASTM F-1121, **Standard Specification for International Shore Connections for Marine Fire Applications** .

555-4.6.8 SPANNER WRENCH. To facilitate the disconnection of hoses, two adjustable (Figure 555-4-13), pin type lug, or multi-purpose (Figure 555-4-14) spanner wrenches are provided at each fire hose station.

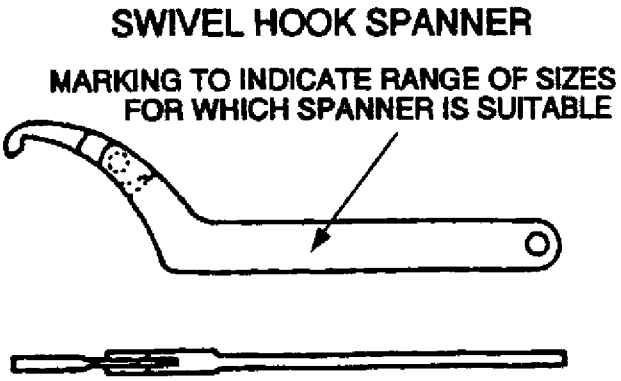

Figure 555-4-13 Adjustable Spanner Wrench

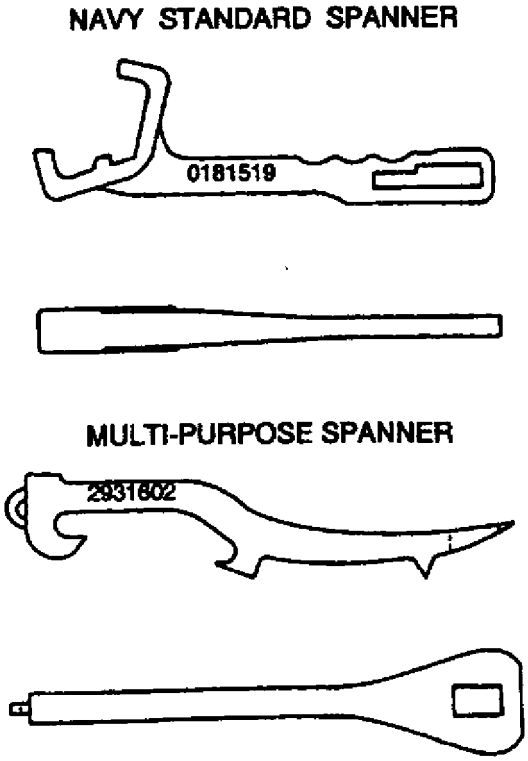

Figure 555-4-14 Navy Standard and Multi-Purpose Spanner Wrenches

555-4.7 PRESSURE LOSS

555-4.7.1 CHECKING HOSE PRESSURE At rated pressure, either the 2-1/2 or the 1-1/2 inch hose, equipped with the proper nozzle will deliver a stream of water at the proper discharge rate (see paragraph 555-4.9.1.3). If the discharge fails to conform to these criteria, the firefighter should:

1. Check to ensure that all valves are fully opened.
2. Check the hose to see whether there is a double twist or kink.

3. Inspect the nozzle tip and barrel for a possible obstruction.

4. Check for clogging in the quick-cleaning strainer at the fire hose station (if installed). In view of this possibility, especially in tropical waters where marine growth is plentiful or during battle when concussions could shake encrustation particles loose, the firefighter should open the cleanout valve on the strainer and flush it out.

555-4.7.1.1 If none of the preceding steps corrects the discharge problem, it is probable that the firemain system pressure is too low. If this is the case, the firefighter should immediately lay a line into the adjoining sectionalized firemain if possible; or in case of ruptures, the firefighter should close the stop valves and install a jumper line to furnish the affected section with water. In certain circumstances, portable pumps may be used to increase a low firemain pressure.

555-4.7.2 FRICTION LOSS. The firefighter does not have to calculate friction losses. It is only necessary for the firefighter to understand what happens when he connects additional hose, reduces a single line to two smaller lines, or makes other adjustments. Although friction loss through hose varies with the flow rate, it can be roughly estimated. For 1-1/2 inch hose, friction loss is roughly 25 psi per 100 feet at 100 gpm (one hose line). For 2-1/2 inch hose, friction loss is roughly 2 psi per 100 feet at 100 gpm, 10 psi per 100 feet at 200 gpm (200 gpm will supply two 1-1/2 hoses), 20 psi per 100 feet at 300 gpm (firemain jumpers), or 35 psi at 400 gpm (firemain jumpers).

555-4.7.3 APPRAISING THE WATER STREAM. In appraising the performance of a stream of water from the nozzle, the firefighter should take into consideration the loss of pressure in hose lines resulting from the internal friction between the moving particles of water and the lining of the hose. Increasing the length of hose lines by connecting additional hose, or reducing a single large hose line into smaller hose lines increases the overall friction losses. Friction loss, not only in the hose but in the firemain and fittings as well, accounts for much of the usual difference in pressure between the firemain pumps and the nozzles.

555-4.7.4 CAUSES FOR PRESSURE LOSS. Other causes for pressure loss include clogging, static head that results when pipes and hose are led upward (10 psi per 25 feet in height), ruptured lines, kinks in the hose, and excessive demand when too many lines are laid to a fire (or fires), thereby exceeding the capacity of that section of the firemain. If the latter situation exists, only the lines laid to the most vital positions should remain charged.

555-4.8 NAVY VARI-NOZZLES

555-4.8.1 GENERAL. The Navy nozzle used on both seawater and AFFF hose lines is referred to as the Vari-nozzle (see Figure 555-4-15 and Figure 555-4-16). The spray pattern from this nozzle can be varied from straight stream through a range up to at least a 90° fog stream pattern. Some nozzles may adjust up to approximately 110° depending on the manufacturer. Stream patterns are changed by rotating the black shroud which surrounds the last 4 to 5 inches of the tip end of the nozzle. Markings are provided to indicate position settings for straight stream, narrow fog (30°), and wide fog (90-110°). The gallons per minute flow rate remains constant throughout the pattern range. The Vari-nozzle flow rate can also be throttled from a trickle to full flow by operating the bail handle shut off. Table 555-4-5 provides vari-nozzle stream characteristics. The vari-nozzle produces an acceptable fog pattern down to 60 psi. Below 60 psi the fog pattern is not full, and radiant heat protection is degraded.

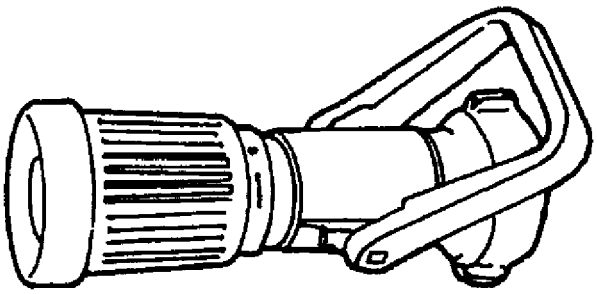

Figure 555-4-15 2-1/2 Inch Navy Vari-Nozzle

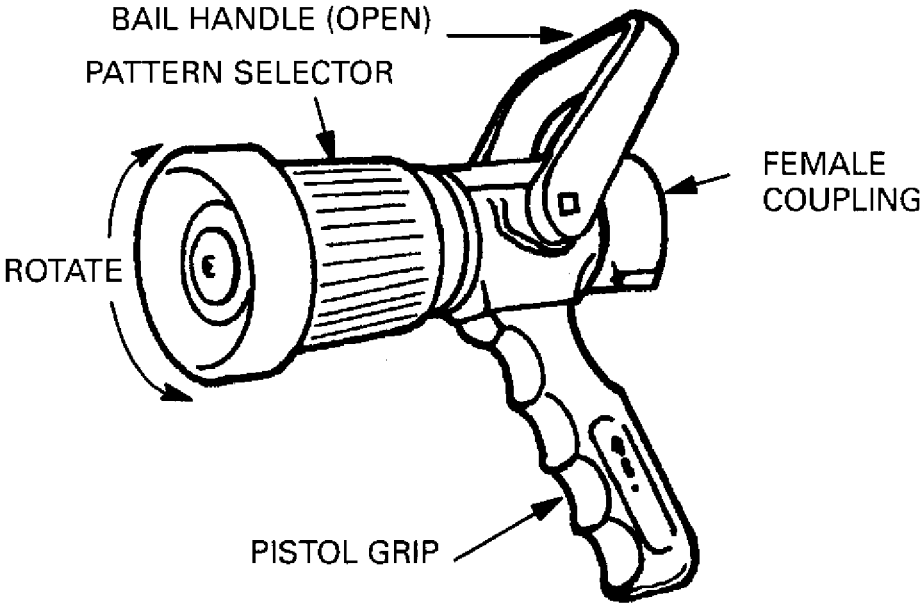

Figure 555-4-16 1-1/2 Inch Navy Vari-Nozzle (pistol grip)

Table 555-4-5 VARI-NOZZLE STREAM CHARACTERISTICS

Navy Vari-Nozzle			
Size (in.)	1-1/2	1-1/2	1-1/2
Pressure (psi)	50	60	70
Straight Stream			
Discharge (gpm)	65	70	77
Reach (ft)	58	68	70
Narrow Angle Fog			
Discharge (gpm)	64	70	77
Reach (ft)	25	25	28
Diameter (ft), (at reach)	5	5	5
Wide Angle Fog			
Discharge (gpm)	64	70	77
Reach (ft)	11	11	11
Diameter (ft), (at reach)	17	16	15

555-4.8.2 FLUSH SETTING. Vari-nozzles have a ″flush″ setting which increases the waterway clearances to pass typical firemain debris. This feature permits the nozzleman to flush out debris if the nozzle becomes partially or fully clogged. The flush setting allows a higher gpm flow in a distorted fog pattern. There are two styles of flush mechanisms depending on the manufacturer.

a. On the Akron style, ″flush″ is reached by rotating the pattern adjustment shroud past the wide fog setting until it stops at the flush marking.

b. The Elkhart style has a rotating ring about midway along the nozzle barrel with two indicated positions. The normal operating setting is indicated by a ″95,″ ″125″ or ″250″ (depending on nozzle size and rating) and the ring is held in this position by a spring loaded thumb latch. The flush position is reached by rotating the pattern adjustment shroud to wide fog and unlatching the flush ring and rotating it to the flush position.

NOTE

The pattern shroud must be in wide fog setting to achieve the maximum waterway clearance.

555-4.8.3 VARI-NOZZLE DATA. The 1-1/2 inch size nozzle has a pistol grip type handle. The sizes, flow rates, and applications of vari-nozzles appear in Table 555-4-6. Nozzle gpm rating is marked on the nozzle.

Table 555-4-6 VARI-NOZZLE DATA

Size (in.)	Rated Flow At 100 PSI (gpm)	Application	NSN Stock Number	Notes
3/4	12-23-30	Vital Electronic Space Freshwater Hose Reels	4210-01-394-3951	-
1-1/2	95	Seawater hose lines; Machinery Space AFFF hose reels; with in-line AFFF eductor	9C-4210-00-465-1906	
1-1/2	95	Same as above	not stocked	plastic construction
1-1/2	125	Flight deck, VERTREP area & hangar bay AFFF hose lines	9C-4210-00-601-0986	
2-1/2	250	All 2-1/2 in. hose lines	9C-4210-00-465-1904	

555-4.8.4 STOWAGE. Actions to Ensure Readiness:

1. During PMS, ensure that there is no apparent internal or external damage, all moving parts are free, the waterway is clear of foreign objects, and the pliable coupling gasket is in place.

2. For the Elkhart, the flush ring should be set and latched in the ″95″, ″125″, or ″250″ setting as applicable.

3. The pattern shroud should be preset on narrow fog, the pattern most often used.

WARNING

Do not use straight (solid) stream water pattern on an energized electric source to avoid shock hazards. Maintain a minimum standoff distance of 4 feet when applying water to an energized electric source.

555-4.8.4.1 The Navy vari-nozzle should be stowed with the bail handle in the closed position and the nozzle set to the narrow angle (30° pattern) fog.

555-4.8.5 GASKETS. The Navy vari-nozzle is a disposable, not a repairable item. The only component part replacement authorized is the coupling gasket. The outside diameter of a 1-1/2 inch vari-nozzle gasket is slightly different for each manufacturer. NSN's for vari-nozzle gaskets are provided in Table 555-4-7.

Table 555-4-7 VARI-NOZZLE GASKETS

Manufacturer	Nozzle Size (in.)	Gasket Outside Diameter (in.)	NSN
Akron	1-1/2	2-1/16	9Z-5310-00-728-7702*
Elkhart	1-1/2	1-15/16	9Z-5330-01-041-7548**
Akron/Elkhart	2-1/2	3-3/16	9Z-5330-00-304-9265

* This gasket is also used on Akron's Navy All-Purpose (NAP) nozzles, line gages, and inline eductors.
** This gasket is also used on Elkhart's inline eductors.

555-4.9 NAVY ALL PURPOSE NOZZLE

555-4.9.1 GENERAL. The Navy All-Purpose (NAP) nozzle is provided in Damage Control Repair Stations for indirect firefighting use and next to fire hose stations serving three inch, five inch, and 76 mm guns, for hot gun conditions, in accordance with NAVSEA SW 300-BC-SAF-010, Safety Manual for Clearing of Live Ammunition for Guns is a single valve configured for three positions; shut, fog, or solid stream (see Figure 555-4-17). The NAP nozzle comes in one standard size, 1-1/2 inches. The 2-1/2 inch size is no longer used.

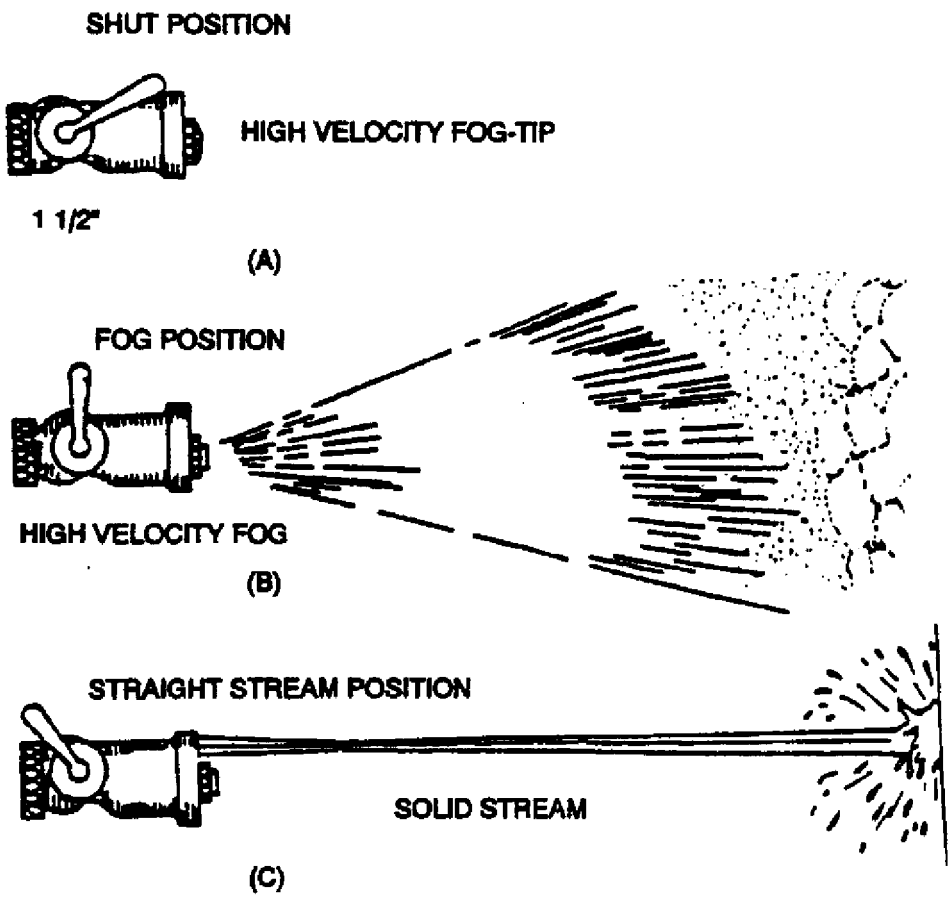

Figure 555-4-17 Operating Positions for Navy All-Purpose Nozzle

555-4.9.1.1 NAP Nozzle. The NAP nozzle should always be stowed with the control handle in the shut position. The high velocity fog tip provides a medium angle (60°) fog pattern. The high velocity fog tip is removable in order to accommodate a wide angle fog applicator equipped with an applicator nozzle. This combination will produce a wide angle fog pattern when the control handle of the NAP nozzle is set in the fog position; however, a solid stream is still available by pulling the control handle all the way back. NAP nozzles and applicators have the following stock numbers:

NSN 4210-00-392-2943, 1-1/2 inch NAP nozzle

NSN 4210-00-372-0864, 1-1/2 inch applicator, 4 foot

NSN 4210-00-372-0865, 1-1/2 inch applicator, 10 foot

555-4.9.1.2 Wide Angle Fog Applicators. There are two standard size applicators (see Figure 555-4-18). The dimensions and angles of bend are shown in the illustration. For operating applicators, the pressure at the inlet to the nozzle should be approximately 100 psi; however, they operate acceptably with an inlet pressure of as little as 60 psi. The wide angle fog applicator is provided with the large orifice applicator nozzle (see Figure 555-4-19). The low velocity fog head is no longer used.

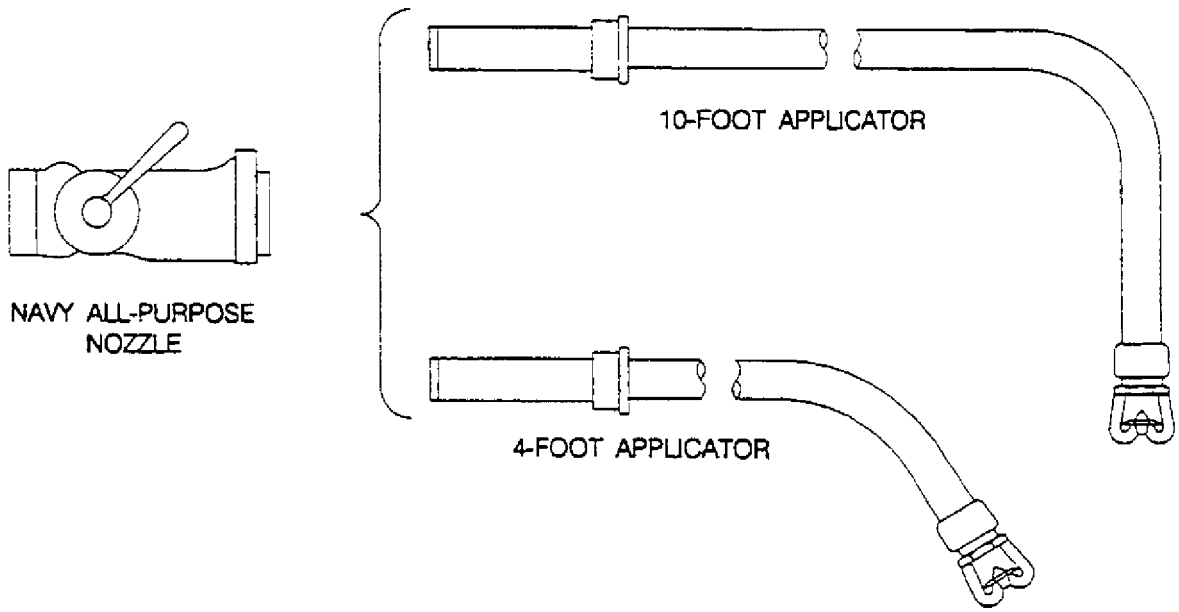

Figure 555-4-18 Navy All-Purpose Wide Angle Fog Applicators

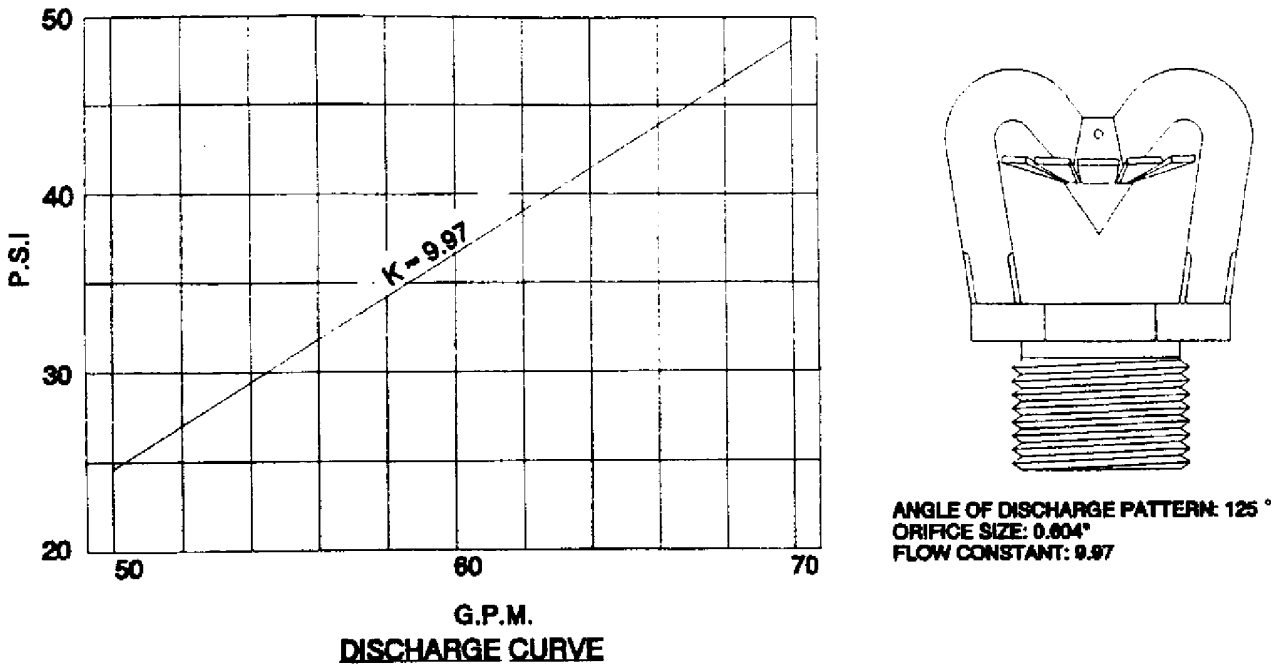

Figure 555-4-19 Large Orifice Applicator Nozzle (1-1/2 Inch NAP Nozzle Applicator)

555-4.9.1.3 Nozzle and Applicator Discharge Flow Rates. The firefighter should become familiar with the performance characteristics of the NAP nozzle in any selected position. A fireplug pressure of 100 psi results in only 70 psi at a 5/8-inch nozzle outlet at the end of 100 feet of 1-1/2 inch hose. Using these nozzle pressures and conditions, the figures shown in Table 555-4-8 have been prepared to serve as a guide when estimating various nozzle discharge capacities and stream characteristics. All figures used in the table are approximate and are cal-

culated for still air. To use the table, select the appropriate nozzle size, then move downward until you are at the proper discharge pattern title (Straight Stream, High Velocity Fog, or Wide Angle Fog). Reading the figures listed next to the subtitles (Size, Orifice, Pressure, Discharge, Reach, or Diameter), will provide the desired information. For more detailed information on the flow rates and discharge patterns for the NAP nozzles and applicator nozzles, (see Figure 555-4-19 and Figure 555-4-20).

Table 555-4-8 ALL-PURPOSE NOZZLE STREAM CHARACTERISTICS

Nap Nozzle	
Size (in.)	1-1/2
Orifice (in.)	5/8
Pressure (psi)	70
Straight Stream	
Discharge (gpm)	97
Reach (ft)	65
High-Velocity Fog	
Discharge (gpm)	54
Reach (ft)	25
Diameter (ft)	6
Wide Angle Fog Applicator	
Discharge (gpm)	83
Reach (ft)	-
Diameter (ft)	-

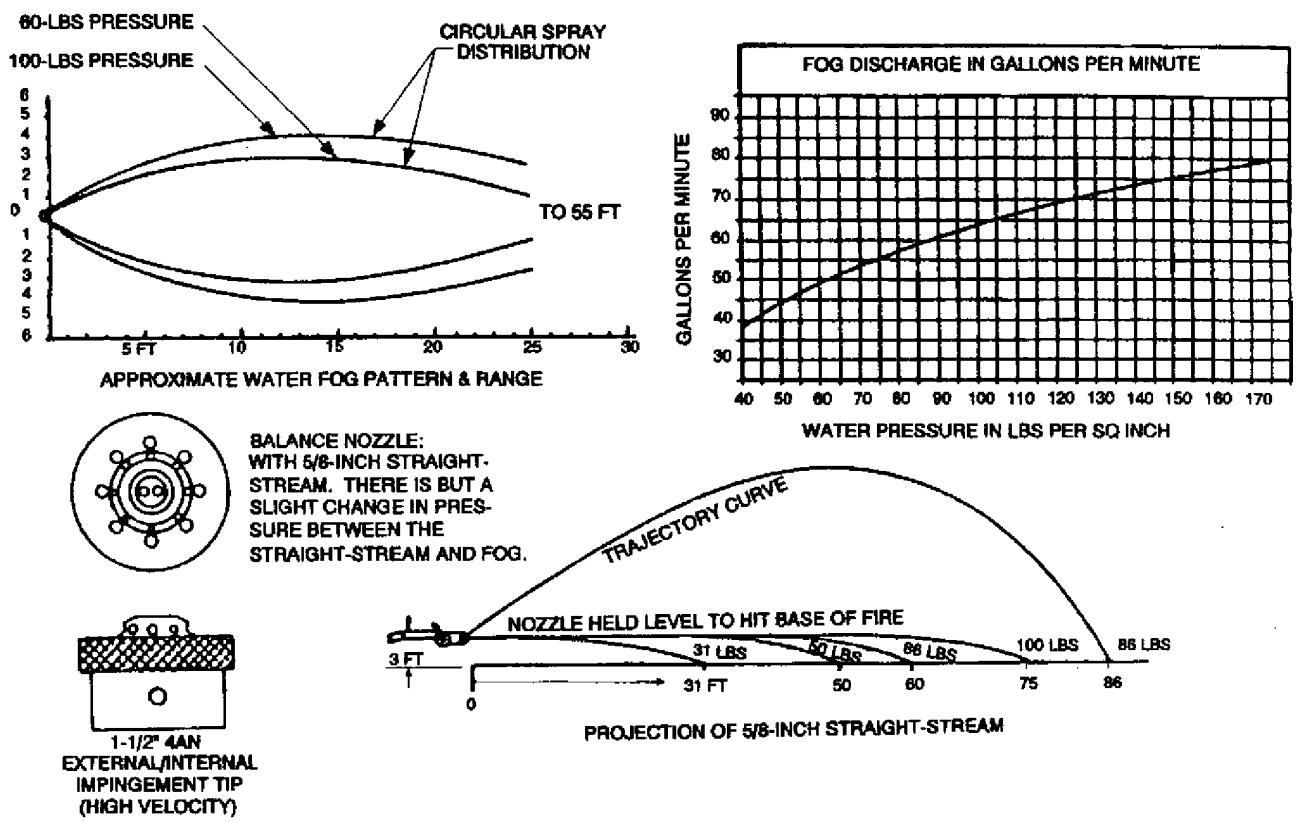

Figure 555-4-20 1-1/2 Inch Navy All-Purpose Nozzle Flow Patterns External and Internal Impingement Tip

555-4.10 PORTABLE AQUEOUS FILM FORMING FOAM INLINE EDUCTOR

555-4.10.1 GENERAL. The portable inline eductor is used to mix seawater and AFFF concentrate to produce an AFFF solution for combatting fires. The eductor (see Figure 555-4-21 and Figure 555-4-22) consists of a bronze body with an internal ball check valve and flexible pickup tube assembly. The eductor is used in conjunction with a 95 gpm vari-nozzle. The male end of the hose line feeding seawater to the eductor is threaded into the swivel female end of the eductor. Seawater passing through the eductor causes a suction in the pickup tube assembly which in turn draws AFFF concentrate from a 5 gallon can or 55 gallon drum. The eductor mixes the AFFF concentrate and seawater at approximately a 6 percent ratio when the inlet pressure to the eductor is 100 psig. Continuous use will require about 5 gallons of AFFF concentrate per minute.

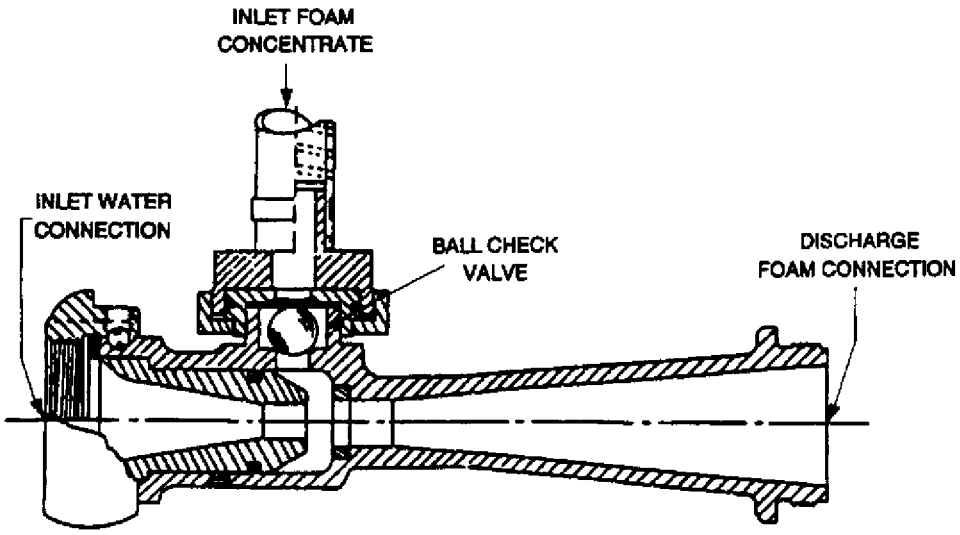

Figure 555-4-21 AFFF Foam In-Line Eductor

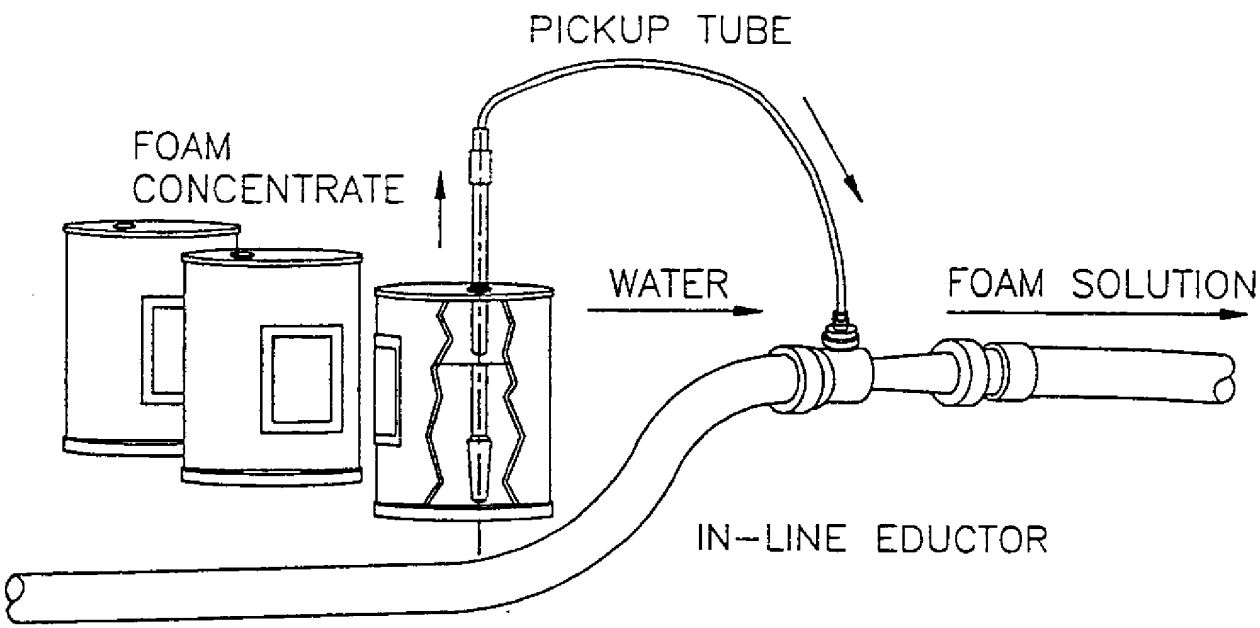

Figure 555-4-22 Setup of AFFF In-Line Eductor

555-4.10.1.1 For optimal in-line eductor operations, eductor inlet pressure should be 100 psi or greater. As inlet pressures decrease below 100 psi, hose kinking potential and nozzle stream deterioration increases. At approximately 50 psi eductor inlet pressure, pickup of AFFF concentrate stops. Therefore it is recommended that in-line eductors be connected directly to fire plugs or that hose on the inlet side be limited to one 50 foot section to minimize inlet pressure reduction due to friction loss. Friction loss downstream of the eductor can create sufficient backpressure so that the AFFF suction will cease to operate but seawater will continue to flow. Users of the inline eductor must limit the hose lengths downstream of the eductor to three (150 feet) when fighting fires in the horizontal plane or advancing up not more than one deck. When an AFFF eductor is rigged on a deck above the deck where the fire is being fought (as in machinery space re-entry), up to six lengths of hose (300 feet) may be connected downstream of the eductor. These operating parameters provide conservative guidance to maximize reliability during in-line eductor use. The operability of in-line eductors is dependent upon the combination of fire main pressure, gpm flow, eductor inlet pressure, and back pressure at the eductor outlet. These factors will vary for and during each firefighting scenario due to firemain pressure fluctuations, hose lengths, condition of hose, elevation changes of nozzleman, and kinks in the hose. Therefore, as conditions warrant, attempts to utilize in-line eductors with greater hose lengths and/or nozzle elevations are not prohibited.

WARNING

Hose kinks downstream of the eductor may cause sufficient back pressure to stop the pickup of AFFF concentrate from containers. Vari-nozzles must be completely open for proper eductor foam proportioning. Do not operate nozzles with a partially opened bail handle.

555-4.10.2 PICK-UP TUBE EXTENSION. Prior to mid-1994, AFFF in-line eductors had a 60-inch long pick-up tube assembly consisting of an 18-inch metallic tube with strainer and a 42-inch flexible hose. Aboard some ships, the 60-inch pickup tube assembly is not long enough to reach the bottom of an AFFF concentrate

can on the deck when the eductor is mounted directly on a fireplug. The eductor specification was revised in 1994 to increase the total pick-up assembly length to 72 inches. Ships experiencing reach problems with the earlier eductors are authorized to extend the flexible hose by 12 inches to a total nominal hose length of 54 inches. The extension hose material shall be spiral reinforced clear polyvinyl chloride. Clamps must be securely fastened after the new hose is installed to prevent air leaks. Extension hoses can be obtained via open purchase from eductor manufacturers.

555-4.11 PORTABLE PUMPS

555-4.11.1 GENERAL. Emergency portable pumping equipment is supplied to naval ships as part of the ship's allowance. On large ships, portable pumps should be used as an independent firefighting pump. On large ships, they have inadequate capability to augment fire-main systems. On small ships, portable pumps have limited capability to augment undamaged sections of the firemain or drainage systems. On all ships, portable pumps can be used for dewatering. The P-100 pump is the principal portable pump on US Navy ships. This section describes the P-100 pump, related equipment, and operating procedures.

555-4.11.2 P-100 PUMP. The P-100 pump, (see Figure 555-4-23), is a commercial diesel engine driven portable pump unit designed for firefighting and limited dewatering functions aboard ships. The pump unit engine can be fueled with either JP-5 or F-76 fuels. JP-5 is the preferred fuel due to the ability to operate using JP-5 over the pump unit's entire operating temperature range. The design features of the pump are described in the following paragraphs.

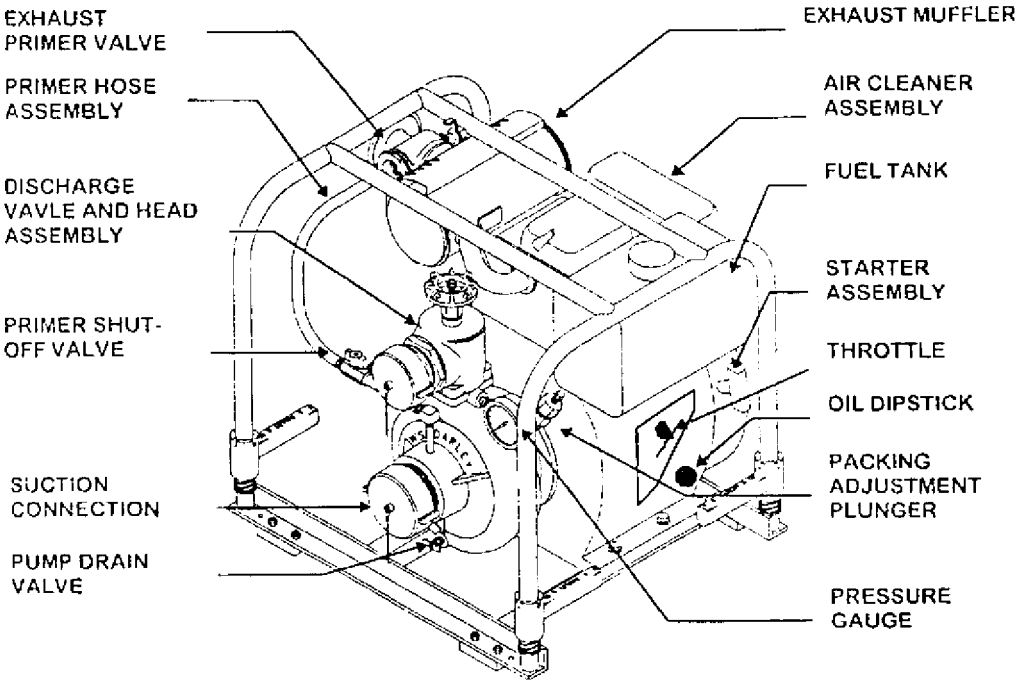

Figure 555-4-23 P-100 Portable Diesel Engine Driven Centrifugal Pump

555-4.11.2.1 Pump Performance. The rated capacity of the P-100 pump at a 20-foot suction lift is 100 gpm at 83 psi. Figure 555-4-24, shows two pump curves of pump discharge pressure versus pump flowrate. The upper curve demonstrates the relationship of the pump's discharge pressure and flowrate when throttling the pump discharge. Data was obtained at a 20-foot suction lift, and recorded at the pump discharge connection. The pump

was outfitted with 30 feet of hard rubber suction hose and a standard Navy foot valve on the suction side of the pump. The lower curve demonstrates the pump-pressure-to-flowrate relationship when the pump is configured using a 2-1/2″ discharge x 1-1/2″ inlet size (Vita Motivator) educator to achieve suction at a 35-foot lift. Data was obtained at the pump discharge connection. The pump was outfitted with 3″ hard rubber suction hose from the eductor outlet to pump suction, while the eductor charging line was 1-1/2″ cotton jacketed fire hose. A standard Navy foot valve was installed on the eductor inlet. In firefighting or dewatering situations, the pump will be outfitted with varying lengths and/or sizes of hose and may be outfitted with other accessories such as an AFFF eductor and vari-nozzle. The actual pressure and flowrate obtained at the final discharge point will be dependent on the pump suction lift, height of the accessories with respect to pump and the total number of hoses used prior to discharge.

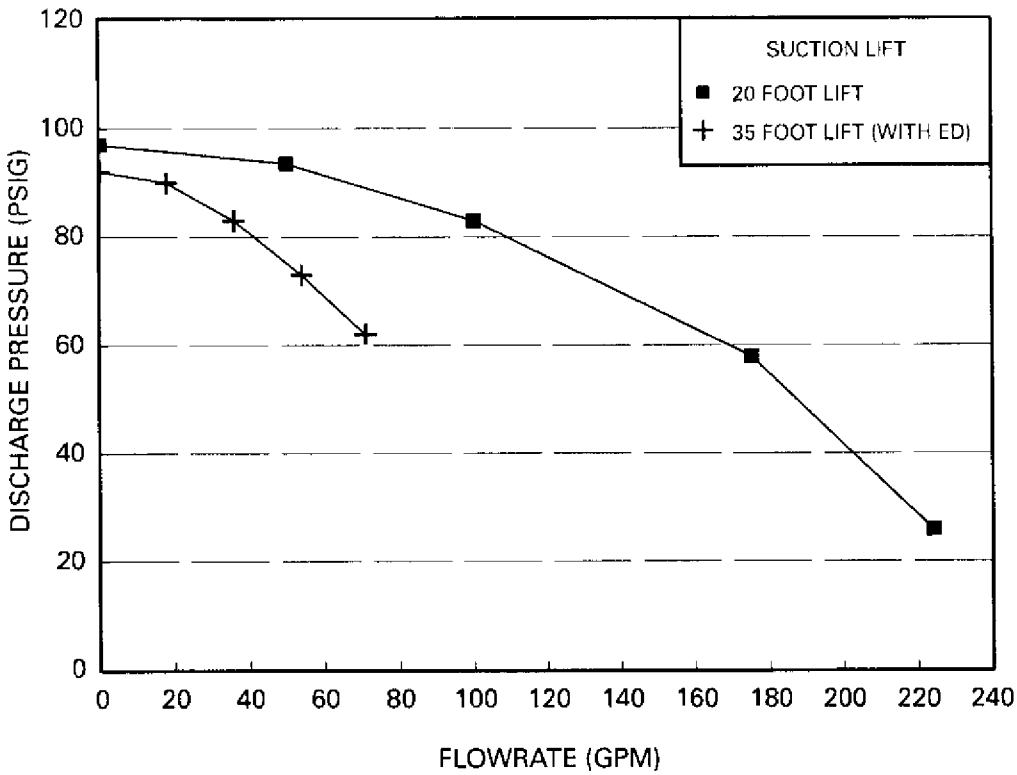

Figure 555-4-24 P-100 Discharge Pressure

555-4.11.2.2 Pump Assembly. The pump assembly consists of the engine, centrifugal pump, exhaust primer, discharge valve, recoil starter, attached 1.45 gallon fuel tank, and compound pressure gage.

555-4.11.2.3 Engine. The engine is an air cooled, one cylinder, four cycle diesel engine rated at 10 horsepower. Ignition is achieved by compression which is initially aided by a compression release lever.

555-4.11.2.4 Pump. The pump is a single suction, single stage centrifugal pump complete with a compound pressure gage, drain valve, and primer connection. The impeller is a closed design and the shaft is sealed by a unique pelletized packing gland. The suction and discharge connections have male threads which receive 3-inch and 2-1/2 inch hoses, respectively.

555-4.11.2.5 Exhaust Primer. The engine exhaust muffler is constructed to incorporate a jet type ejector and receive an insulated exhaust hose. When the primer is operated, the main exhaust port is blocked by the cylinder valve forcing the exhaust flow through the priming jet. The vacuum developed by the exhaust jet evacuates the air from the pump casing and suction hose. Because of the vacuum developed, atmospheric pressure forces water up through the suction hose and into the pump casing.

555-4.11.2.6 Fuel Tank. The 1.45 gallon capacity fuel tank is mounted to the engine. The tank assembly consists of the tank, fuel filter, isolation valve, injection valve, level sight tube, and a fuel tank cap.

NOTE

For complete information concerning operation and maintenance of the P-100 pump, consult manufacturer's technical manuals, S6226-NM-MMC-010.

555-4.11.2.7 Preparation of the P-100 Pump. Before operating the P-100, be sure that all suction hose connections between the foot valve and the pump are tight, and that the strainer is completely submerged in water. If the exhaust primer fails to lift water, or if the discharge shows an uneven stream, the most probable cause is air leaking into the suction through a poor connection. Be sure to support the suction hose so that the weight of the hose will not be borne by the pump casing. Make certain that the foot valve is completely submerged during the entire period of pump operation, otherwise severe damage to the equipment may result.

555-4.11.2.8 Operation of the P-100 Pump

WARNING

Do not operate the pump in an enclosed area without the engine exhaust hose connected and routed safely to atmosphere. Exhaust gases contain carbon monoxide, which is odorless and poisonous, and can cause injury or death when inhaled.

WARNING

High temperatures exist in the vicinity of exhaust components, connections and exhaust hose discharge. Wear firefighter gloves at all times when handling exhaust hoses.

1. Connect hoses to suction and discharge connections and where required, connect the exhaust hose. Check coupling gaskets and ensure proper tightening of all connections.
2. Close the pump drain valve and all other openings into the pump casing.
3. No lubrication is required except for the engine. Check engine lube oil for proper level prior to attempting to start.

4. Close the pump discharge valve until it is only partially open.
5. Open the primer line shut-off valve located between the primer jet and the pump suction.
6. Open the fuel tank isolation valve located under the fuel tank.
7. Set the engine throttle control to the ″START″ position.
8. Slowly pull on the recoil starter checking engine and pump for freedom of movement. Depress the compression release lever ensuring that it remains depressed. The compression release lever will spring shut when the engine rotates during starting attempts.
9. Start the engine by pulling the recoil starter rope. A strong deliberate pull is required to prevent engine kickback and possible starting in the reverse rotational direction. If this does occur, immediately shut down the engine. Operation in the reverse direction is characterized by the evidence of exhaust gases coming out of the intake filter. Reverse operation does not allow full power operation, positive priming, and will cause damage to the unit.
10. Once the engine is running, set the engine throttle control to the ″RUN″ position.
11. Shift the exhaust valve to the prime position blocking the main exhaust opening.
12. When a steady stream of water appears at the discharge of the priming jet, close the primer line shut-off valve and return the engine exhaust valve to the normal position. Open the pump discharge valve.
13. Repeat the priming operation if the pump fails to hold its prime. If the pump does not deliver water within one minute, stop the engine and check for air leaks at suction connections and/or the pump packing gland, or failure of the priming jet to produce vacuum.

CAUTION

The gland adjustment nuts should be kept sufficiently tight to prevent excessive leakage only. Slight leakage is always required during operation to cool the packing and prevent damage to the impeller shaft.

14. While the pump unit is running, occasionally monitor the pump discharge gage and fuel tank level. For periods of extended operation, refueling may be necessary. Extreme caution is required when refueling a hot or running engine. An additional crew member must standby with a portable Aqueous Film Forming Foam (AFFF) fire extinguisher or a portable dry chemical (PKP) fire extinguisher in the event that fuel is inadvertently spilled on hot engine parts.
15. To stop the pump unit, reduce engine speed to an idle speed and allow the engine to cool down for two minutes. Return the engine throttle control to the ″STOP″ position. If engine continues to run, shut the fuel tank isolation valve.

555-4.11.2.8.1 After Operating the P-100 Pump. If the pump has been used to pump seawater, the seawater must be drained from the pump by opening the pump casing drain valve. The pump must be flushed with fresh water to prevent corrosion and salt crystals from forming on close toleranced pump internals. After flushing the pump, apply a spray silicone compound to pump internals and replace hose connection caps.

555-4.11.2.9 Accessories. Accessories for portable pumps are listed in the appropriate AEL's. The major accessories include a foot valve, wye-gate, tri-gate, peri-jet eductor, 3 inch hard suction hose, 4 inch hose, 1-1/2 inch fire hose, 2-1/2 inch fire hose, and engine exhaust hose.

555-4.11.2.9.1 Foot Valve. The foot valve is attached to the male end of the 3 inch hard suction hose. It consists of a wire strainer, housing, and flapper valve which is spring loaded to the closed position. The foot valve allows water to enter the suction hose freely and prevents the water from draining back, therefore keeping the fire pump primed if it should be shut down temporarily. The wire strainer serves to prevent larger foreign matter which might damage the pump from entering the suction hose. The foot valve is provided with a valve release for draining the suction hose and reducing the weight when recovering the suction hose and foot valve.

555-4.11.2.9.2 Illustrations. Accessories are shown in Figure 555-4-25 through Figure 555-4-27.

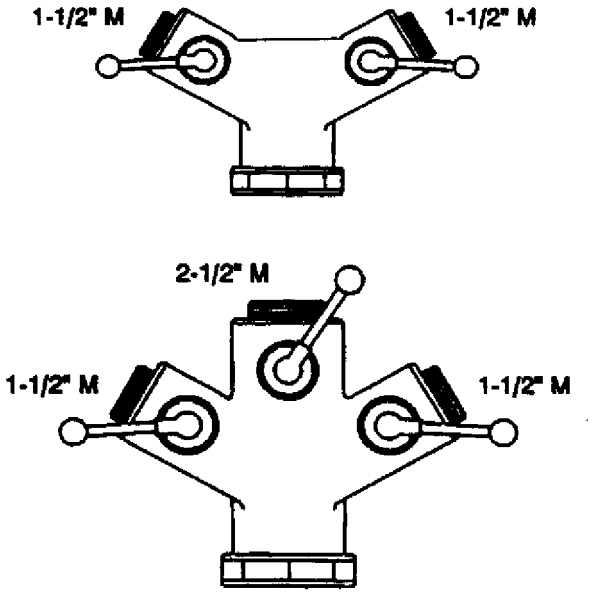

Figure 555-4-25 Wye-Gate and Tri-Gate Valves

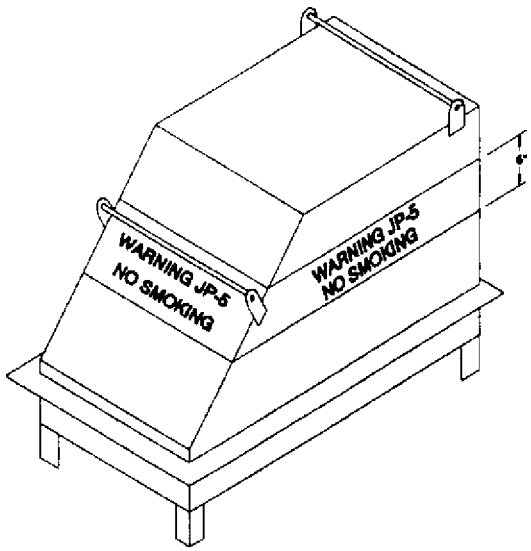

Figure 555-4-26 P-100 Stowage

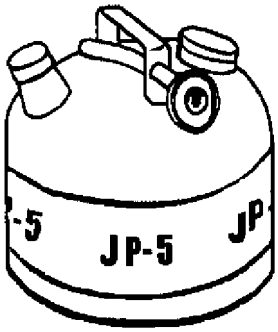

Figure 555-4-27 P-100 Spare Fuel Can

555-4.11.2.9.3 Stowage. The P-100 pump and all accessories shall be located on the damage control deck or above with no more than one pump stowed in a main watertight subdivision. One pump, with all accessories, shall be stowed for ready transfer off the ship for rescue and assistance mission in port or at sea.

555-4.11.2.9.4 Fumetight Cover. The fumetight cover (Figure 555-4-26) for the P-100 pump shall be marked with a 6 inch wide purple (color No. 17142) band with the words ″WARNING JP-5/F-76 NO SMOKING″ stenciled on the purple band with 2 inch high white letters (color No. 17886).

555-4.11.2.9.5 Spare Fuel. One spare fuel can per pump to be stowed with pump unit is authorized. Safety precautions and hazard warning shall be in accordance with **NSTM Chapter 542, Gasoline and JP-5 Fuel Systems** .

555-4.11.2.9.5.1 Fuel Can. The Spare Fuel can for the P-100 is a commercially available galvanized steel utility can. The fuel can NSN is 7240–00–878–7217. The red can shall have a 4 inch wide purple (color No. 17142) band painted horizontally around the fuel can with the word ″JP-5″ stenciled on the purple band with 2 inch high white (color No. 17886) letters on four sides (Figure 555-4-27).

555-4.11.2.10 Portable Pump Hookup for Firefighting. When used as a fire pump, as shown Figure 555-4-28, the engine throttle should be adjusted to the maximum pressure obtainable without overfueling of the engine, as is evident from black engine exhaust smoke. When using a single 1-1/2″ hose equipped with a vari-nozzle and at suction lifts up to twenty feet, the pump unit should maintain a minimum pressure between 75 and 83 psi. Use of a second 1-1/2″ hose is not recommended. The reduction in discharge pressure when flowing two hoses will increase hose kinking and deteriorate nozzle stream performance.

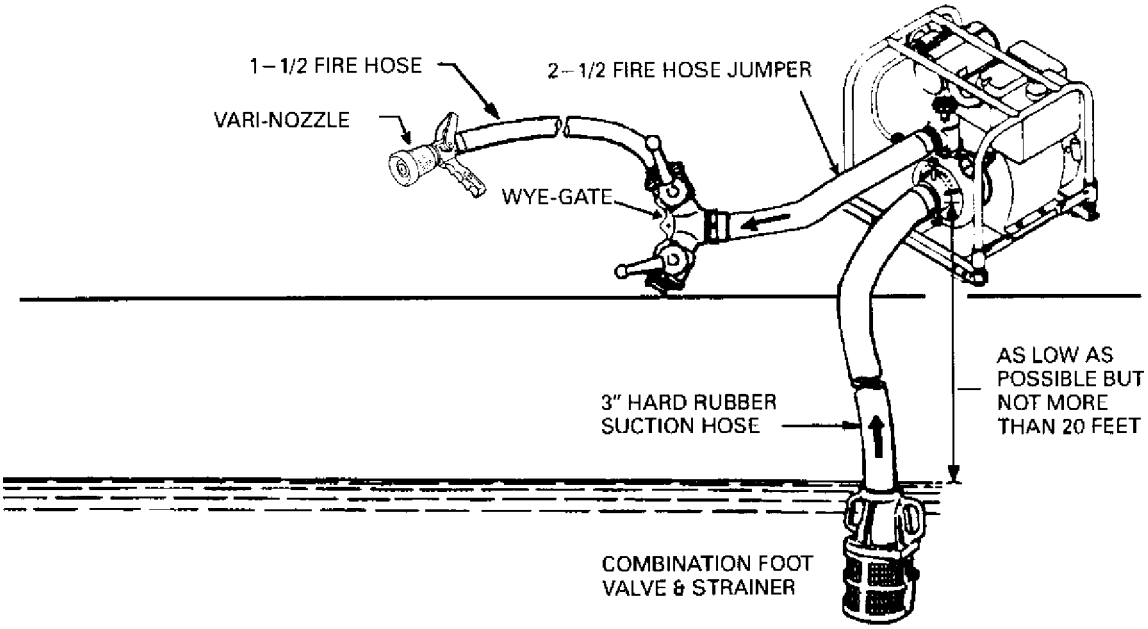

Figure 555-4-28 Firefighting Hookup

CAUTION

Operation of the pump unit at high speeds without discharging water will result in rapid heating of the water in the pump and damage to the pump unit.

When operating with a single hose, and after securing the hose nozzle, a means to maintain a minimum water flow through the pump is required. Bleeding water through a second hose or from the unused wye-gate or tri-gate valve fitting is sufficient to maintain a flow of water from the pump. When use of hose lengths greater than 100 feet is required, a length of 2-1/2″ hose and a wye-gate attached at the pump discharge should be used to extend the hose to reduce friction loss.

555-4.11.2.10.1 Pump Suction. Straight suction to maximum of 20 feet may be taken either from overboard or from a flooded compartment. A combination strainer and foot valve at the lower end of the suction hose prevents foreign matter from entering and permits priming of the suction line and pump (centrifugal pumps must be primed when operating with a suction lift).

555-4.11.2.10.2 Use with AFFF Inline Eductors. A P-100 pump operating at full discharge capacity can provide Aqueous Film Forming Foam (AFFF) using the AFFF inline eductor. However, reduction in pressure when flowing through the eductor will increase hose kinking and deteriorate nozzle stream performance. The P-100 pump has been shown to produce the proper percentage of AFFF when operating at the pumps rated discharge pressure of 83 psig at a sixteen foot suction lift, with one 50 foot section of hose on the inlet side of the AFFF eductor and two 50 foot sections of hose on the discharge side fitted with a 95 gpm vari-nozzle, resulting in 60 gpm and 40 psi at the nozzle. With extended hose lengths (greater than 100 feet) or advancing the hose up multiple decks, the AFFF inline eductor may stop educting AFFF concentrate.

555-4.11.2.10.3 High Suction Lift. For scenarios involving high suction lift, water trapped in the firemain may be used for rapid priming of the pump and the suction hose by running a fire hose from the nearest fire hose station to an available port on the wye-gate attached to the P-100 pump and using the water that drains from the fire hose station riser. For firefighting where lifts are greater than 20 feet, but not more than 39 feet, consider the technique illustrated in Figure 555-4-29. In this procedure, the wye-gate is connected to the pump discharge, 1-1/2 inch hose is run to an eductor below the water surface, a 3 to 2-1/2 inch adapter is installed on the eductor discharge, and a 3 inch suction hose is run back to the pump suction. This will provide a flow rate of 68 gpm at 45 psi through a 95 gpm rated 1-1/2 inch vari-nozzle, located 30 feet above the pump with 50 feet of hose. Above a 39 foot suction lift, the flow stops completely for this configuration. Additionally, on some ships it may be possible to obtain emergency firefighting water by rigging the P-100 to take suction from water ballast tanks. Figure 555-4-30 demonstrates P-100 pump discharge pressures and discharge flowrates over the full range of working suction lift when configured with a 2-1/2″ outlet x 1-1/2″ inlet eductor (Vita Motivator) as in Figure 555-4-29. The pump final discharge was directed through a wye gate to a 1-1/2″ fire hose, elevated to a height of approximately 30 feet above the water surface and through a 95GPM vari-nozzle. Two sections of 1-1/2″ fire hose were used for the eductor charging line. Six 10-foot lengths of 3″ hard suction hose and a 3″ to 2-1/2″ adaptor were used between the eductor outlet and pump suction connection. In high lift firefighting situations, the pump may be outfitted with varying lengths and/or sizes of suction and discharge hoses. The graph shows that pump pressures and flowrates do not vary significantly over the entire suction lift range up to approximately 39 feet, where pump flow stops. The actual pressure and flowrate obtained at the final discharge point will be dependent on the number and types of hoses used. The curves demonstrate that pump performance in the high lift configuration is nearly independent of suction lift until approximately 39 feet. Efforts to minimize suction lift in the high lift configuration should only be made to ensure the 39-foot suction lift is not exceeded. A P-100 pump operating in the high suction lift configuration will not provide AFFF when using the AFFF inline eductor.

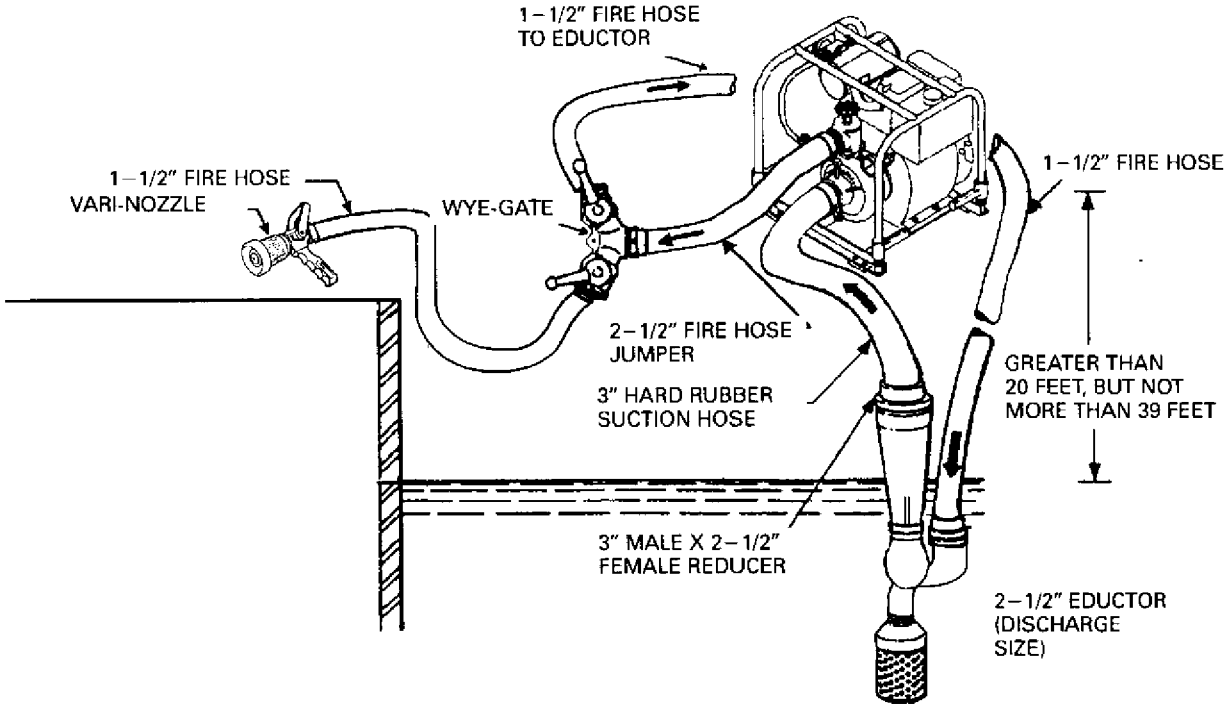

Figure 555-4-29 Firefighting Hookup for Suction Lifts Greater Than 20 Feet

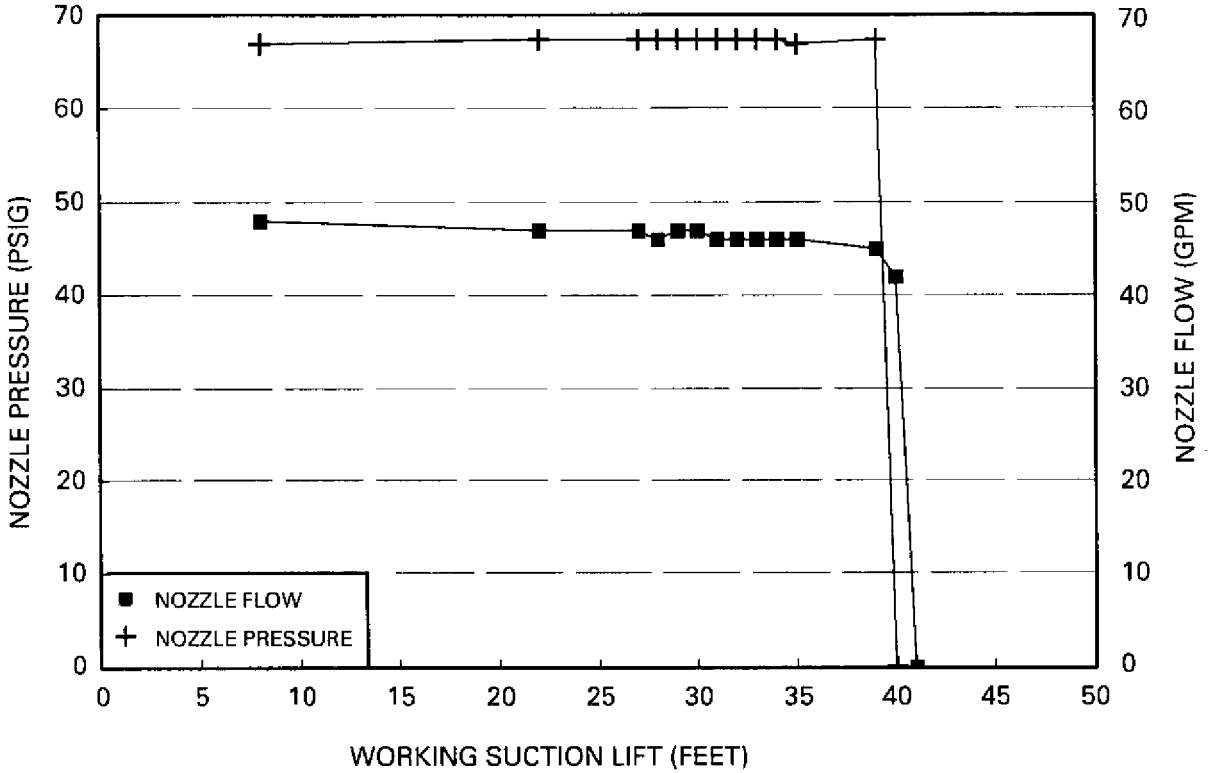

Figure 555-4-30 P-100 Performance in High Lift Configuration

555-4.11.2.10.4 Portable Pump Hookup for Dewatering. When the portable P-100 pumps are used for dewatering compartments, the discharge pressure that the pump is required to develop is considerably lower than the pressure required for effective firefighting. Only enough pressure is needed to move water from the elevation of the pump to the elevation at which the water is discharged (this is known as the static head, 2.31 feet in the vertical elevation is equal to 1 psi pressure) plus the friction head caused by the resistance to flow of water. Maximum discharge flow will be obtained by adjusting the engine to the full throttle setting, without overfueling the engine, as is evident from black engine exhaust smoke, and using the largest size hose or combination of hoses available to discharge from the eductor.

555-4.11.2.10.5 Dewatering with Eductors. For dewatering operations involving very low static heads where the difference in level between the liquid surface of the compartment to be dewatered and the point of discharge is 55 feet or less, another method is available which is more efficient than the nozzle discharge method described in the preceding paragraph. This method which permits a greater discharge capacity, utilizes eductors as pumps, with the eductor actuated by the output of the P-100 pump as depicted in Figure 555-4-31. The P-100 pump takes suction in the usual way from the flooded compartment, raising the water overboard through the 2-1/2 inch fire hose, the hose is led to an eductor located in the flooded compartment. In the eductor, the velocity of the high pressure water jet creates a difference in pressure which allows additional water to be pumped from the flooded compartment. The eductor output consists of the entire capacity of the P-100 pump being used and the water picked up from the compartment by the eductors. While at first glance it appears as if something was obtained from nothing, it actually represents a conversion process in which a high pressure water stream of certain volume contains sufficient energy to move a water stream of larger volume against a low pressure. While this process in not 100 percent efficient, when compared with straight pumping, it results in increased dewatering capacities at static heads of 55 feet or less. The discharge capacity of an eductor increases with a decrease in static head. It is recommended that the discharge outlet be placed at the shortest practicable distance above the discharge level.

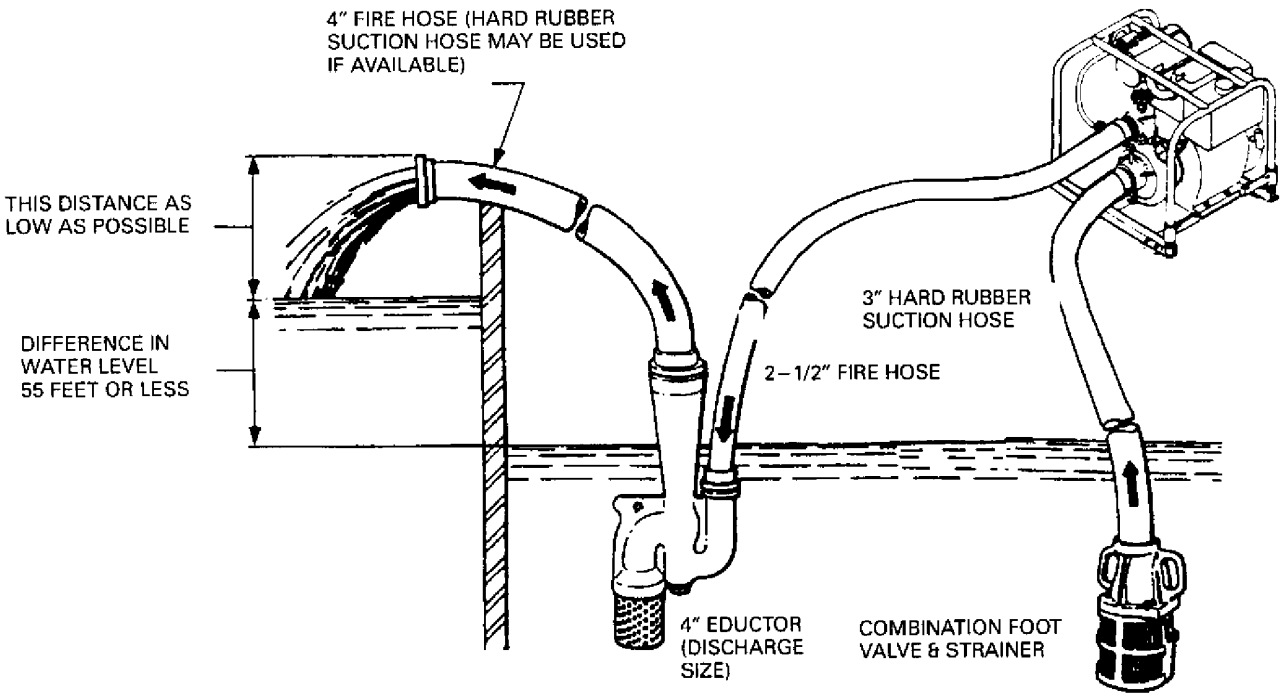

Figure 555-4-31 P-100 Pump Dewatering

555-4.11.2.10.6 Dewatering Contaminated Liquids. An eductor actuated by the P-100 pump also provides a ready means of pumping liquids which cannot be moved directly with the pump. In pumping liquids such as fuel oil, gasoline, or a mixture of oil and water with an eductor, the P-100 pump takes water from any available supply and uses the water to actuate eductors as shown in Figure 555-4-32.

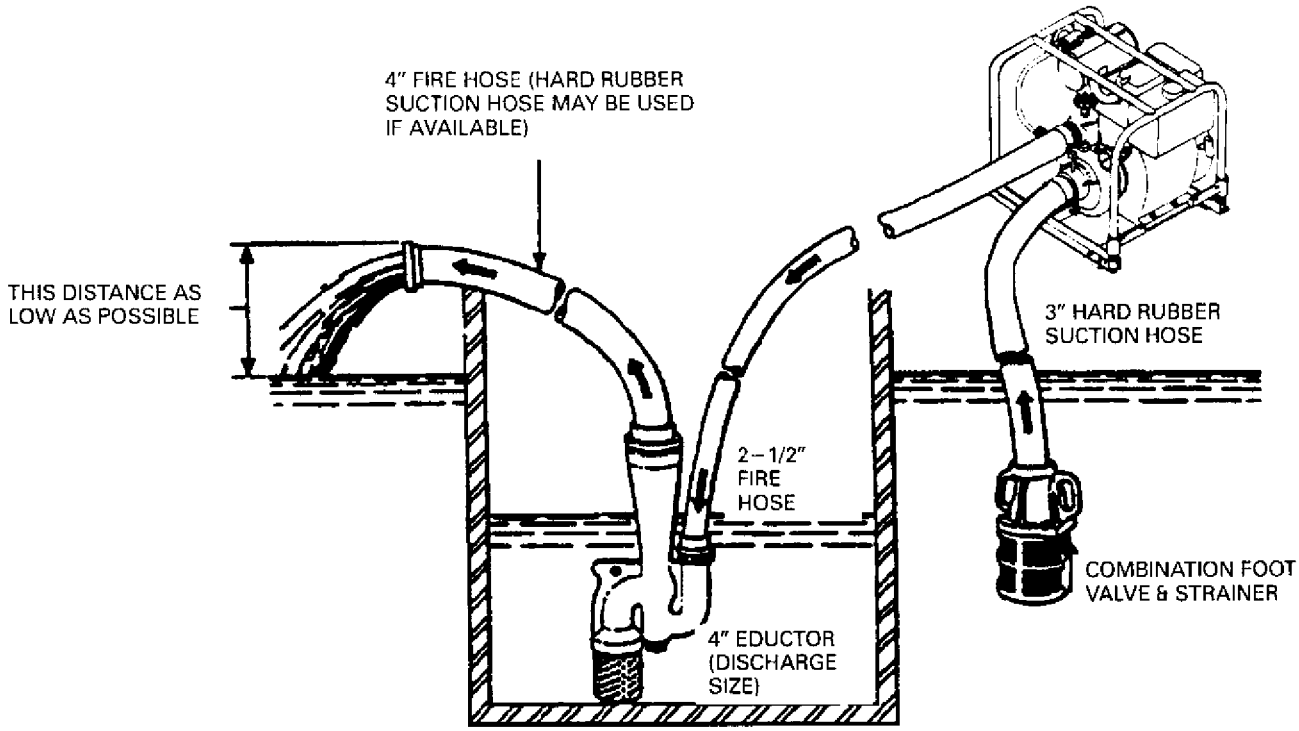

Figure 555-4-32 Dewatering Contaminated Liquids

555-4.11.2.10.6.1 For information on dewatering with other equipment, see **NSTM Chapter 079, Volume 2** .

555-4.12 FRESHWATER HOSE REEL SYSTEM

555-4.12.1 Freshwater hose reels are provided on aircraft carriers and newer surface ships to combat fires in vital electronic spaces, including inside electronics cabinets, above false ceilings and under false decks. They are installed adjacent to accesses to vital electronic complexes. Each hose reel is equipped with 50 feet of 3/4-inch diameter hose and an adjustable flow, variable pattern nozzle.

555-4.12.2 The fresh water hose reel system is supplied from a fresh water source such as the potable water system. The hose reel service line typically contains, in order going downstream, an isolation valve, a reduced-pressure backflow preventer to prevent contamination of the potable water supply, a dedicated booster pump, a drain, a riser, and piping to a ball type cut out valve at each hose reel's inlet. The water supply is available during material condition Zebra.

555-4.12.3 A pushbutton station containing a ″pump-on″ push button, a ″pump-off″ push button, a ″power-available″ light (white lens) and a ″pump-running″ light (green lens) is installed in the vicinity of each hose reel's cut out valve. See paragraph 555-8.8.4.4 for guidance on using the fresh water hose reel. See paragraph 555-8.2.2 for procedures on fighting an electrical panel fire.

SECTION 5.

FIREFIGHTING ORGANIZATION

555-5.1 INTRODUCTION

555-5.1.1 GENERAL. Naval ships are designed to absorb and recover from all types of damage. A well structured and knowledgeable damage control organization will extract the maximum utility from the survivability

features designed into the ship. The ideal organization will provide for continuity of critical functions, while allowing a flexible attack against different types of fires under various circumstances. The ship's fire bill establishes a firefighting organization and assigns responsibilities for its direction and execution. The organization, procedures, and responsibilities set forth in this bill are based on provisions and responsibilities described in OPNAVINST 3120.32 (series), **Standard Organization and Regulations of the U.S. Navy** , the latest Naval Warfare Publications (NWP), and the Damage Control Organization outlined in the ship's battle bill. The ship's watch, quarter, and station bills assign personnel by name to the various duties required for effective firefighting. A complete description of the duties, responsibilities, and authority of personnel in the damage control chain of command is found in NWP 3-20.31, **Surface Ship Survivability** .

555-5.1.1.1 Engineer Officer. The engineer officer is the damage control officer responsible, under the commanding officer, for the care and maintenance of the main propulsion plant, auxiliary machinery and piping systems; for control of damage; for the operation and maintenance of electric power generators and distribution systems; for repairs to the hull; and for repairs to material and equipment of other departments which require the special attention of the engineering department. See NWP 3-20.31 for more detail.

555-5.1.1.2 Damage Control Assistant. The damage control assistant (DCA) is responsible, under the engineer officer, for ship's survivability systems to include control of damage, control of stability, list, trim, fighting fires, restoration of damage and CBR measures. See NWP 3-20.31 for more detail.

555-5.1.1.3 Gas Free Engineer. The Gas Free Engineer is the properly trained, qualified, and designated individual authorized to decide when all necessary and effective precautions have been taken to eliminate the risk of fire, explosion, exposure to toxic substances, suffocation, or asphyxiation before entry into questionable atmospheres or closed spaces. See Section 2 for post-fire duties of the Gas Free Engineering Petty Officer. See NWP 3-20.31 for more detail.

555-5.1.1.4 Fire Marshal. The Fire Marshal is an assistant to the Engineer Officer and aids the DCA in the training of personnel and the prevention and fighting of fires. The Fire Marshal shall proceed directly to the fire scene to direct efforts of the rapid response team. If the fire is beyond the capabilities of the rapid response team, the fire marshal shall turn his duties over to the scene leader of the at sea fire party and assume other duties as directed. These duties may include:

a. Overall command of at-sea fire party

b. Supervising the establishment and maintenance of communications

c. Posting of boundaries

d. Directing logistic support to the at-sea fire party. The fire marshal assumes a "big picture" role upon being relieved by the scene leader providing particular attention to the potential for vertical fire spread. The fire marshal makes recommendations for additional personnel or GQ as required by the magnitude of the casualty.

e. If General Quarters is called away and the at-sea fire party is relieved, the fire marshal may be assigned other duties such as repair party leader.

555-5.2 CONDITION I — GENERAL QUARTERS

555-5.2.1 During general quarters, Condition I, the ship has its maximum capability to withstand and recover from damage. Many ships routinely set general quarters upon notification of a fire, others defer the decision until after an initial estimate of fire size and severity is received.

555-5.3 CONDITION V — IN PORT

555-5.3.1 In-port duty sections must be chosen to preserve the capabilities required of the duty fire party. Depending on the number of people assigned, some people may have to perform multiple functions.

555-5.3.2 When at Condition I, a particular fire party can request assistance from a different damage control repair station. In-port, however, this option may not exist. The in-port fire party may be able to request assistance from other members of the duty section, a base fire department, or other ships, as necessary.

555-5.4 REPAIR PARTY

555-5.4.1 GENERAL. A Repair Party is a part of the damage control organization as specified in NWP 3-20.31. A damage control repair station is a location of a ship which contains damage control equipment, including firefighting equipment and serves as the control location for the repair party. When at general quarters, all damage control repair stations are manned by the repair party and the crew assigned to each repair party will typically be organized to provide one fire party. In a major fire, other members of the repair party will be formed into relief fire parties. During conditions other than general quarters, the fire party will typically go to the damage control repair station nearest the fire and use the equipment which is there. The number of repair parties aboard a ship depends on the size and arrangement of the ship. Not all ships will have all repair parties that are shown in the list below and some ships will split a repair party into multiple locations to better respond to the ship's arrangement.

REPAIR PARTIES

Cognizance	Designation
Main deck	1
Forward	2
Aft	3
Amidship	4
Propulsion	5
Ordnance	6
Gallery Deck & Island	7
Elex & Combat Systems	8
Aviation Fuel Repair	No number
Crash & Salvage Team	No number
Ordnance Disposal	No number

555-5.4.1.1 Except for Repair 6, Repair 8, Aviation Fuel Repair, and Ordnance Disposal Repair, each damage control repair station provides the following:

a. Firefighting and damage control equipment

b. Personal protective equipment

c. Communications

555-5.4.1.2 Each ship's Coordinated Shipboard Allowance List (COSAL) lists the equipment required for a damage control repair station. Most of the equipment is listed in the Damage Control Allowance Equipage List (AEL). The rating specialties assigned should reflect the primary responsibilities of the repair party. For example, engineering ratings should be assigned to Repair 5, and ordnance ratings to Repair 6. Each repair party has other specialists such as an electrician or corpsman, and some non-designated personnel.

555-5.4.2 REPAIR PARTY LEADER (RPL). The repair party leader coordinates all firefighting actions in his assigned area of the ship. He receives reports from the scene leader and investigators. At a minimum, the RPL shall:

a. Receive reports from the scene leader and investigators.

b. Ensure all boundaries are established and maintained, with particular attention given to the potential for vertical fire spread.

c. Ensure mechanical, electrical, and hull isolation is established to the degree required by the situation.

d. Provide logistic support to the scene.

e. Ensure an accurate DC diagram plot is maintained and necessary status reports are made. The RPL must take an active role in the training of assigned personnel and must be aware of logistic (personnel and material) deficiencies within the repair party's area of responsibility.

555-5.4.3 REPAIR PARTY. The number of people in the fire party assigned to a repair party will vary, depending on the nature of the fire and the number of people available. As a minimum, the following functions as defined in NWP 3–20.31 shall be performed:

- Be in charge at scene
- Direct and coordinate nozzlemen
- Operate the NFTI
- Operate nozzles
- Tend hoses
- Operate fire plugs and rig jumper hoses
- Open accesses and use forcible entry tools
- Determine location of fire and nature of casualty
- Set and man fire, smoke and chemical, biological and radiological (CBR) boundaries as necessary (CBR boundaries are discussed in Section 555-7.13)
- Carry messages
- Carry and supply to the scene AFFF concentrate, OBA's or SCBA's, OBA canisters or SCBA cylinders, equipment, and material as required
- Deenergize circuits and rig power cables as required
- Perform first aid

- Desmoking

- Man Foam Station when operated

The manning for each repair party will determine the size of the fire party. Some people may have to perform multiple functions.

555-5.4.4 SCENE LEADER. The scene leader is in charge of firefighting at the scene of a fire. He sizes up the fire. He determines the method of attack and directs the attack against a particular fire, see paragraph 555–5.4.5 below. He determines the protective clothing requirements for the fire party based on assessment of conditions found. He should be normally located outside the primary fire boundary in order to best control the fire party. He directs the deenergizing of electrical equipment and requests setting of boundaries in the immediate area. He communicates with the repair party leader and receives coordinating instructions from him.

555-5.4.5 ATTACK TEAM. In accordance with NWP 3-20.31, the scene leader decides what resources are needed for an attack team, including the need for a separate individual as attack team leader, a back-up hose, and a NFTI. The attack team consists of an attack team leader (when a separate individual is assigned by the scene leader), and one or two fully manned hoses. Each manned hose consists of a nozzleman and hosemen (as required). An attack team leader should not be responsible for more than one attack team.

555-5.4.5.1 Attack Team Leader. Attack team leader responsibilities shall be assigned by the scene leader for every fire to either the nozzleman or to a separate individual whose only function is that of attack team leader. A separate individual is necessary as attack team leader if a NFTI is used. A separate individual as attack team leader is desirable to direct the rotation of attack team personnel. The attack team leader directs the nozzleman in employment of the hose, directs the hosemen, directs that the hose be charged or secured, selects the spray pattern to be used, directs the rotation of attack team personnel, and communicates as he deems necessary with the scene leader. When two manned hoses attack the fire together, the attack team leader directs and coordinates the two nozzlemen. If two manned hoses attack a fire area independently, they are considered to be two separate attack teams and require separate attack team leaders.

555-5.4.5.2 The scene leader determines the number of hosemen necessary to man each hose. Minimum hose manning, in addition to the attack team leader (when assigned separately), is a nozzleman, and two hosemen for a 1-1/2 inch hose line or four hosemen for a 2-1/2 inch hose line. The last hoseman operates the fireplug as required. Minimum manning is based on a 100-foot hose run with the hose in a line of sight. Manning may increase due to hose runs around sharp turns and on ladders along the route. See section 555-7.3 for more guidance. Use of a P-100 portable pump or AFFF inline eductor, in support of an attack team, will require a dedicated operator.

555-5.4.5.3 Generally, the nozzleman works the hardest and will need to be relieved before the hosemen. Rotating the nozzleman and the hosemen can extend the endurance of the attack team.

555-5.4.5.4 The organization and functions of fire party members should be determined by the scene leader to suit conditions on scene. When fighting a severe fire, the attack team should have no functions to perform other than attacking the fire with a hose line, and the fire party should be organized with a separate support team to perform functions such as access, boundary cooling and correcting equipment problems.

555-5.5 AT-SEA FIRE PARTY

555-5.5.1 Some ships, particularly larger ships, have chosen to dispatch an at-sea fire party to reported fires and defer a decision to go to general quarters until receiving a report from the at-sea fire party. For additional information, see NWP 3-20.31. The advantages of this scheme are:

a. Highly trained firefighters make initial response.

b. Cross training will provide greater flexibility when forming a response team.

c. Less disruption to the ship's routine for small fires.

d. Rapid access to the scene without interference of passing through Zebra doors or hatches and busy passageways.

555-5.6 RAPID RESPONSE TEAM

555-5.6.1 Except for condition I, a rapid response team is an element of the fire party organization. For further detail, see NWP 3-20.31.

555-5.7 OTHER FIRE PARTY FUNCTIONS

555-5.7.1 INVESTIGATORS. The investigators constantly search for fire, damage, and personnel casualties. They monitor fire and smoke boundaries. They make reports to the repair party leader or fire marshal as appropriate, using the best available means (WIFCOM, where available). See **NSTM Chapter 079, Volume 2** , Section 40 for more information on investigators.

555-5.7.2 FIRE BOUNDARYMEN. Fire boundarymen proceed directly to the scene when a fire is called away and set primary and secondary fire boundaries as directed by the repair party leader or fire marshal. They secure all doors, hatches, and openings in the boundary of the fire area. They remove or relocate combustibles as required. They cool boundaries with hoses as required. They are normally monitored by and report to the roving investigators.

555-5.7.3 COMMUNICATOR. The communicator (phone talker/messenger) operates the designated DC communications circuits. He may use a computer system, WIFCOM, ships telephone system, sound powered phones, or message blanks as necessary.

555-5.7.4 ELECTRICIAN. The electrician secures electrical power as directed by the scene leader and checks for electrical damage as required.

555-5.7.5 NFTI OPERATOR. Acts as assigned by the attack team leader.

555-5.7.6 ACCESSMAN. The accessman opens doors, hatches, and scuttles and clears routes as necessary to provide access to the fire when directed by the scene leader. He may use forcible entry equipment such as dogging wrenches, pry bars, bolt cutters, or exothermic torch.

555-5.7.7 REFLASH WATCH. The reflash watch is posted after the fire has been reported out with the appropriate extinguishing agent. The reflash watch is positioned where best able to provide initial response to reflash and assists in overhaul of the fire.

555-5.7.8 OVERHAULMEN. The overhaulman works together with the reflash watch to cool hotspots and secure potential re-ignition sources.

555-5.7.9 SMOKE CONTROLMAN. As directed by the repair party leader, the smoke controlman operates dampers in the ship's ventilation system, sets smoke contol boundaries and rigs portable smoke curtains, implements active desmoking as a member of the active desmoking team, and implements post-fire desmoking. He coordinates these actions with the scene leader.

SECTION 6.

FIRE PARTY EQUIPMENT

555-6.1 PERSONNEL PROTECTION

555-6.1.1 GENERAL. If a fire has been burning for any length of time, it can reach temperatures exceeding 2000°F (1100°C) and produce dangerous concentrations of smoke and toxic gases. Steam created by water application to burning materials or hot surfaces will easily penetrate gloves and firefighter's hoods/anti-flash hoods and often poses the greatest hazard to the firefighter. Firefighters who are not sufficiently protected against these hazards can not press their attack against the fire and may have to retreat, or may be burned or overcome by smoke. If they become casualties, then they reduce an already limited firefighting force. The scene leader makes the decision to request the firefighter's ensemble (FFE). Factors he considers are tenability of the area, stage of the fire, success of the initial attack and other factors such as the need for protection from potential CBR contamination. The scene leader should also consider the time required for personnel to dress out in protective clothing and equipment. The greater time required to completely dress out allows time for the fire to grow. In certain situations, rapid response of less protected personnel may result in quick knockdown of a fire. For large, well established fires (e.g., machinery space fuel fire or missile-induced conflagration), adequate protection of personnel is generally required before a sustained attack is made. The optimum time to don the firefighter's ensemble is about 2 minutes, with another 1 to 2 minutes required to don breathing apparatus. Under these conditions, the time to don full personnel protection will range from 2 1/2 minutes to 5 minutes. Under these conditions, standby personnel should assist repair party personnel in donning protective equipment. This reduces response time.

555-6.1.2 PROTECTIVE EQUIPMENT. Personnel protection for the fire party required during general quarters should be in accordance with **NSTM Chapter 077** . Members of the fire party not required to wear a firefighter's ensemble (FFE) should have long sleeved uniforms and/or fire resistant engineering coveralls, firefighter's helmet, breathing apparatus (OBA or SCBA), antiflash hood, and protective gloves. If the firefighter's ensemble is not available, multi-layered clothing will provide improved protection when compared to battle dress. Additional clothing presently available on ships that can be layered for use includes fire retardant coveralls, rain gear, cold weather gear, and flight jerseys. Rubber coats, or unlined rubber or plastic gloves should not be worn next to bare skin as this commonly invites burns. Fire retardant coveralls are provided at damage control repair stations for fire party members not wearing the firefighter's ensemble. The most important aspect is to protect all normally exposed areas of the body with some type of clothing. Areas particularly susceptible to steam burns include hands, wrists, neck, knees, ankles, and feet.

555-6.1.3 FIREFIGHTER'S ENSEMBLE. The firefighter's ensemble, shown in Figure 555-6-1, consists of firefighter's coveralls, firefighter's hood, damage control/firefighter's helmet, firefighter's gloves, and fireman's boots, all designed to protect the firefighter from the heat generated by a growing (pre-flashover) fire. For a flashover or fully developed fire, the FFE provides only a few seconds of protection for escape. The firefighter's glove size should be selected for a loose hand and finger fit to reduce heat transfer from continuous material contact and allow glove adjustment at hot points. Additional hand protection can be gained by wearing a flash glove as an extra inner liner to an over-sized firefighter's glove. While waiting to enter the fire area, the FFE coveralls should only be donned to the waist, tying the coverall arms around the waist.

NOTE

Naval message COMNAVSEASYSCOM 020319Z MAR 99 authorized the use of a single new and improved firefighter's hood as a phased replacement to the two anti-flash hoods previously worn with the FFE. The firefighter's hood is more durable, offers more protection, is lengthened for better neck and shoulder protection, and has a larger face opening to accommodate the SCBA/OBA face-mask. The firefighter's hood is distinguished by its gold color, similar to the color of the fire fighter's coverall, whereas the anti-flash hood is beige.

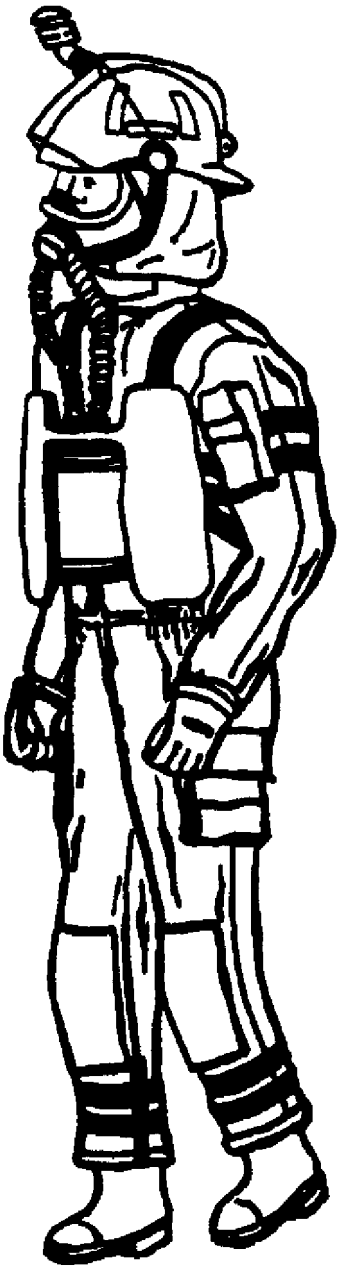

Figure 555-6-1 Firefighter's Ensemble

555-6.1.4 ENTERING FIRE AREA. Breathing apparatus should be activated before fire hoses are advanced into the fire area. In fighting major fires, firefighters should leave the fire area after 30 minutes (in conjunction with the breathing apparatus alarm) and ensembles recycled to fresh personnel to minimize personnel heat stress. In a high heat environment, personnel endurance in an FFE may be 10 minutes or less. Personnel in an FFE may be forced to evacuate due to hot hands, hot feet or other local hot spots on the body. In training, common sense should be used to judge how long a firefighter should be kept in the suit.

555-6.1.5 ADJUSTING PROTECTION. The scene leader may adjust personnel protection as the situation changes. For example, as progress is made during the attack, the fire is under control, and spaces are cooled, endurance of relief personnel will be improved by wearing only engineering coveralls rather than the FFE coveralls, as part of the firefighter's ensemble.

555-6.1.6 EXCESSIVE HEAT EXPOSURE. When clothing in contact with skin becomes wet, the water or water vapor formed may become heated enough to cause severe discomfort and burns. A firefighter reaching this condition should immediately retreat to a safe area and be treated in accordance with paragraph 555-7.5.10.g. If rapid escape from heat is not possible, he should be wetted down on site to prevent or reduce burns. Great care should be exercised in the decision of wetting down the firefighter to prevent or reduce burns. If the firefighter's clothing is dry and hot enough to burn the man, initial wetting could scald him. If clothing is already wet and burning the man, additional wetting probably will help. However, emphasis should be placed on remaining dry for as long as possible and switching to dry clothing after leaving the fire area for relief. When compartment fires have reached ″flashover″ the firefighter's ensemble will only offer sufficient protection to permit time to escape. Fortunately, flashover fires are not common (see paragraph 555-1.9.1.2). For a complete description of all Navy personal protection equipment, see **NSTM Chapter 077** .

555-6.1.7 BW/CW THREAT. When a Biological Warfare/Chemical Warfare (BW/CW) threat exists, apply the fire party personnel protection guidance in this section. Detailed guidance on evaluating the BW/CW threat and on appropriate protective measures is included in **NSTM Chapter 470, Shipboard BW/CW Defense and Countermeasures** ; such guidance is not repeated here. This Section addresses only those aspects of BW/CW defense that are unique to the firefighting environment.

a. In a BW/CW environment, the firefighter's ensemble (FFE) is preferred in lieu of the chemical protective ensemble (CPE) for fire party personnel designated for the FFE in NWP 3-20.31. The CPE does not provide adequate protection from the high temperature and steam exposure which occurs near an intense fire.

WARNING

The FFE does not offer complete protection against BW/CW effects.

When BW/CW contamination is present, care should be taken not to soak the FFE with water as that might allow BW/CW contaminants to reach the skin. If the FFE becomes wet when BW/CW contamination is present, the wearer should retreat to a decontamination station by a designated route.

b. In a BW/CW environment which normally requires use of the CPE, as specified in **NSTM Chapter 470** , fire party members not wearing the FFE should wear the CPE. Exposure to hot smoke and heavy exertion during firefighting can increase heat stress for fire party personnel wearing the CPE. See **NSTM Chapter 470** for guidance on use of the CPE.

c. In a BW/CW environment, breathing apparatus should be worn for protection from smoke and heat from a

fire. Breathing apparatus provides eye and breathing protection from BW/CW contaminants. The MCU-2/P protective mask does not provide protection against fire gases such as carbon monoxide and carbon dioxide, nor does the MCU-2/P protective mask provide protection against oxygen deficient atmospheres found in a fire environment.

d. When the BW/CW threat in the assembly or staging area is such that only eye and breathing protection is required for BW/CW protection, personnel who have been relieved can cool down in such an unprotected area by opening their outer garments while continuing to use their breathing apparatus. Standby personnel can assemble in such an unprotected area and leave their outer garments open while using their breathing apparatus for eye and breathing protection. Standby personnel should completely don their protective suits (FFE or CPE) and switch to a fresh OBA canister or SCBA cylinder before proceeding into the firefighting area. See **NSTM Chapter 077** for guidance for switching OBA canisters or SCBA cylinder while in a BW/CW threat environment. Tests indicate that switching OBA canisters is simpler and involves less risk than switching from an OBA to an MCU-2/P protective mask and then back to an OBA.

e. Firefighting personnel will not be able to cool down sufficiently to avoid heat strain while fully suited up in protective gear. Consequently, when the BW/CW threat in the assembly or staging area requires more than just eye and breathing protection, firefighting personnel must move to a protected area to cool down and avoid heat stress. Generally, such a situation would require the firefighting personnel to go through decontamination prior to entering the protected area.

f. Considering the decontamination time and the time that firefighters can remain on scene, more than two teams may be needed to maintain an uninterrupted attack on the fire. For example, one team would be on scene attacking the fire, a second team would be going through decontamination and a third team would be in standby to relieve the attack team.

g. The standby team should remain in a protected area so that their protective clothing need not be completely donned. If the assembly or staging area is only partially protected so that eye and breathing protection is required, breathing apparatus should be used.

h. The allowance of firefighter's ensembles must be monitored and the use of firefighter's ensembles controlled since the ensembles may be destroyed by the decontamination process. Refer to **NSTM Chapter 470** for decontamination procedures for outer garments.

i. The allowance of OBA canisters or SCBA cylinders must be considered in determining where firefighters will be staged and the type of eye and breathing protection to be used by standby personnel.

555-6.2 NAVAL FIREFIGHTER'S THERMAL IMAGER (NFTI)

555-6.2.1 GENERAL. The Naval Firefighter's Thermal Imager (NFTI), English Electric Valve Inc, Model P4428, is a device that allows the user to see through dense smoke and light steam by sensing the difference in infrared radiation given off by objects with a temperature difference of at least 4 degrees Fahrenheit. (see Figure 555-6-2). A TV-like black and white image is displayed on the rear of the NFTI. When looking through the NFTI the image presented looks like a negative picture, with hotter objects appearing lighter than cooler objects. It can be used to:

a. Investigate reported fires.

b. Locate the seat of the fire.

c. Locate and guide rescuers to injured personnel.

d. Set and maintain fire boundaries.

e. Locate ignition sources during fire overhaul.

A training video is available, titled **Improved Shipboard Firefighting Using the Naval Firefighter's Thermal Imager** , as PIN 805433.

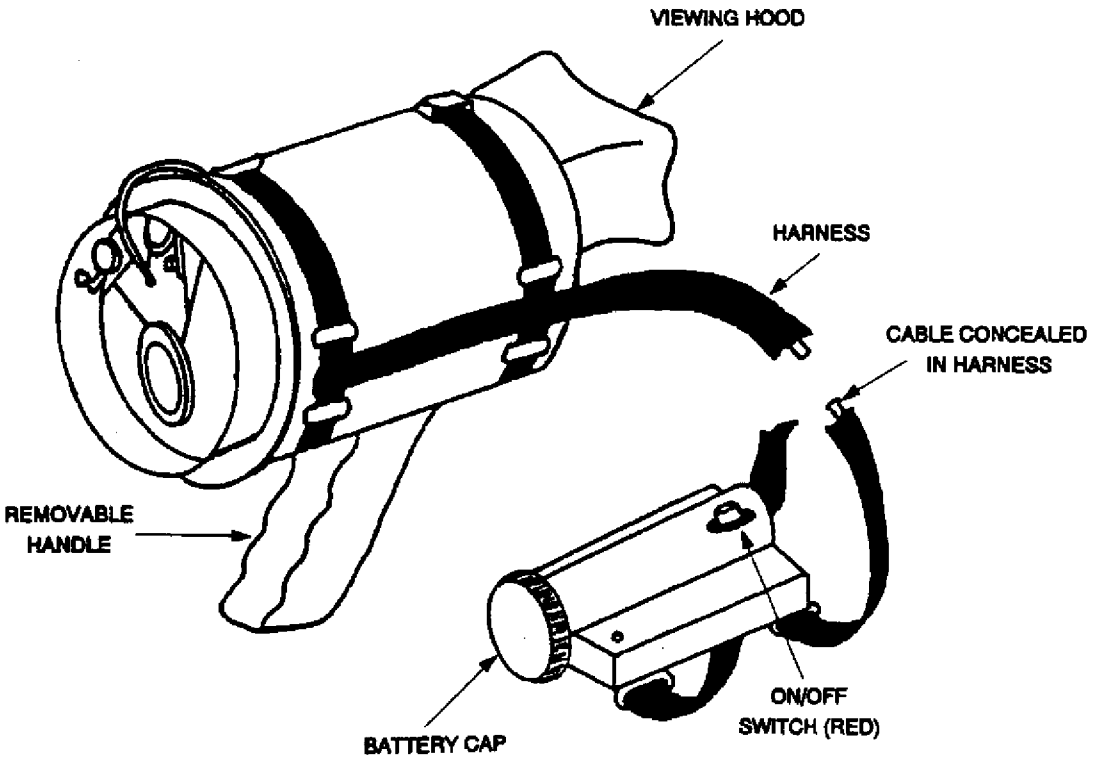

Figure 555-6-2 Naval Firefighter's Thermal Imager

555-6.2.2 STOWAGE. The NFTI should be stowed in its box in a cabinet or strapped down to the deck to protect it from shock. One NFTI should be stowed in Damage Control Central (DCC) or a damage control repair station and the second unit, if available, should be stowed in Secondary DCC or another convenient, far separated, secure space. It is important that the imager be stowed at moderate temperatures. Prolonged exposure to temperatures in excess of 140 F will severely damage the NFTI unit. Nevertheless, the NFTI can be used in high temperature spaces.

555-6.2.3 DEPLOYMENT. The primary function of the NFTI is to help locate the fire when smoke or darkness restrict visibility. The NFTI also may be useful in assessing temperatures from outside a compartment. Following knockdown of the fire, the NFTI can be useful to the reflash watch and to personnel overhauling the fire to locate any remaining hot spots. The NFTI should be brought to the scene whenever initial size up reports heavy smoke or whenever requested by the scene leader. The NFTI is deployed as directed by the scene leader. The NFTI should be operated only by qualified personnel. If the attack team is directed to use the NFTI, it should be carried by the attack team leader.

555-6.2.4 OPERATION. The NFTI operator (as designated by the scene leader) should turn on the NFTI (red button) and check the battery status lights before entering a smoke-filled space. With fresh batteries, five L.E.D. lights should be illuminated in the lower left hand corner of the viewing screen. As batteries weaken, lights will go out. It is good practice to change the battery pack when more than one light is out. In addition, verify that the

NFTI is operating in ″chop″ mode, not in ″pan″ mode, by checking the status of the blue button on the front of the NFTI. The ″chop″ mode is best for firefighting. The ″chop″ mode allows the user to focus on one area, while holding the unit still, but provides a less than sharp image. The ″pan″ mode provides greater sensitivity to small differences in temperature, but the NFTI must be kept in motion or the image will fade out.

555-6.2.4.1 When using the NFTI, it has been found that slow, steady advancement, along with periodic scanning of the scene during an approach, helps the operator to judge distances better. A side-to-side scan also provides important information on hazards in the area and the best direction in which to proceed. An occasional vertical scan will detect hazards above deck level, i.e. cable way or overhead fires.

555-6.2.5 LIMITATIONS. Water, dirt or soot will distort the NFTI's image if deposited on the viewing lens. If this should happen, wipe the lens carefully with a soft, clean cloth. If the unit's internal temperature gets too high the picture degrades and gets lighter. The screen will turn uniformly gray or white if the unit is exposed to excessive heat. The NFTI, if not otherwise damaged, will return to normal operation when removed to a cooler area.

555-6.2.5.1 A battery pack requires 10 ″AA″ alkaline batteries. With fresh batteries, a battery pack has a life of approximately 60-90 minutes. To conserve power, turn the NFTI off when it is not in use. Allow one minute for warmup when it is turned back on. Spare battery packs should be stored with the NFTI. The NFTI operator should carry at least one spare battery pack with him. If viewing images are distorted, gray or dark to the extent that the NFTI's performance is not satisfactory, it is good practice to (a) verify that the lens and viewing screen are clean and, if not, wipe them with a dry, clean, soft cloth, (b) check the battery pack to ensure adequate charge, (c) operate in a cooler place such as closer to the deck, or (d) move out of the fire area to a cooler location. The NFTI may not be fully operable topside due to electromagnetic interference. Consider this possibility when operating the NFTI topside. The NFTI should not be pointed at the sun. Doing this will temporarily saturate its sensor and the viewing screen will white out. The NFTI can not be used to locate fires by viewing through glass windows. The NFTI will sight heat reflection from some surfaces which could be misleading to the operator. Glass is opaque to infrared radiation and thus the NFTI can not see through the window.

555-6.2.5.2 The NFTI operator should stay low to avoid hot gases high in the space and to maintain a clear image with the NFTI. When pointed directly at a large fire, the unit's sensor may become temporarily saturated. The picture will return if the camera is pointed toward a cooler scene. A better image is given if the fire is kept at the edge of the camera's field of view. The spray from a fire hose nozzle may form an optical barrier which the thermal imager can not penetrate. This is sometimes a problem when fan patterns are used by the nozzleman. On the NFTI screen, this appears as an opaque, black curtain. If the nozzleman temporarily redirects the spray away from the fire, the NFTI's field of view is improved. When approaching a large fire, hot gases flowing out of the fire space and along the passageway overhead will appear as white flashes through the camera. The operator must be aware of this and not mistake these flashes for flames.

SECTION 7.

FIREFIGHTING TACTICS

555-7.1 INITIAL ACTIONS

555-7.1.1 The initial actions by the person who discovers a fire can make the difference between a controllable fire and one which threatens the very life of the ship. Even a small fire can create untenable conditions within a space in as little as two minutes. Any crew member discovering a fire or indication of a fire must sound the alarm immediately. The report of fire and its location (compartment number and name) must reach the Officer of The

Deck by whatever method available, such as messenger, telephone, or announcing system. Following that, the discovering crewman or Rapid Response Team must decide whether to attack the fire or start containment and isolation actions.

WARNING

Personnel not wearing breathing apparatus should evacuate smoke-filled spaces.

If the fire is small and appears capable of being controlled, then an attack on the fire would be reasonable. The initial attack can be made by personnel with limited or no protection. Incipient fires should be attacked by personnel in the immediate area using portable fire extinguishers. Portable PKP and carbon dioxide extinguishers are provided for class B and class C fires, respectively. However, the immediate use of any of these extinguishers on an incipient class A fire while hose lines are being advanced may control a fire and prevent a major incident. The simultaneous discharge of two portable extinguishers onto a fire is more than double the effectiveness of discharging one after the other. Where installed, sprinkler systems should be actuated to extinguish fires which are large enough to force the space to be abandoned. If the area is contaminated with CBR agents, appropriate personnel protective gear may be necessary to stay in the area and fight the fire. Generally, in a BW/CW threat environment, personnel already would be wearing appropriate protective gear. The level of protection depends on the situation and should be based on BW/CW threat and guidance in NWP 3-20.31 and **NSTM Chapter 470** . If the fire is large, or the compartment of fire origin is unknown, or fed by a pressurized fuel source, then initial actions should be towards isolation and containment of the fire. If additional personnel are available, firefighting and fire containment can proceed together. All non-essential personnel shall leave the fire area.

555-7.2 FIRE ATTACK

555-7.2.1 REPORTS FROM FIRE SCENE. The fire characteristics, fire location, resources available, and fire growth all determine the overall plan of attack. Reports to be made from the scene are (1) location of fire, (2) class of fire, (3) action taken to isolate and combat the fire, (4) fire contained, (5) fire out, (6) reflash watch set, (7) fire overhauled, (8) compartment ventilated, (9) compartment tested for oxygen, (10) compartment tested for flammable gases, and (11) compartment tested for toxic gases. If a CBR threat exists, reports should include the nature of any CBR contamination and the condition of CBR boundaries (CBR boundaries are discussed in Section 555-7.13). Refer to the glossary of terms for definitions of ″Fire Contained″ and ″Fire Out.″

555-7.2.2 FIRE ATTACK STEPS. Whether one manned hose or multiple manned hoses attack a fire, the steps are the same.

a. Size up (evaluate) the fire.

b. Attack the fire.

c. Isolate affected equipment, systems and spaces.

d. Protect compartments exposed to the fire.

e. Set Fire and Smoke Boundaries and, if necessary, CBR boundaries (CBR boundaries are discussed in Section 555-7.13).

The following paragraphs discuss each step, and some of the judgment factors that come into play when formulating a plan for attacking a fire.

555-7.2.3 SIZE UP THE FIRE. Determine the location of the fire. For large fires involving significant smoke spread, often only a general location can be determined initially. More precise definition will require men with breathing apparatus and thermal imagers to investigate further. Discolored or blistered paint, or smoke puffing from cracks or penetrations are indications of fire on the other side of the bulkhead. Determine what is burning (the class of fire) and what other combustibles are at risk of igniting. Determine if the fire size warrants portable extinguishers, hoselines, or fixed systems such as sprinklers or Halon. Paragraph 555-7.2.4 provides guidance on selecting the appropriate tactic to attack the fire. Determine if and where boundaries should be set to contain the fire, and what systems should be isolated. For large fires, consider the need for a staging area from which to mount the attack. The staging area should include the following characteristics:

a. Communications capability with Damage Control Repair Station.

b. Smoke free, safe haven for firefighters.

c. Adequate room for firefighters and their equipment.

d. If a CBR threat exists and the fire area is exposed to contamination, personnel protection must be considered in selecting the staging area. Section 555-7.2.4 addresses factors concerning personnel protection when fighting a fire in a CBR threat environment.

555-7.2.4 ATTACK THE FIRE. The attack should begin as soon as possible, to gain immediate control and to prevent or minimize the spread of fire. During fire size up, see paragraph 555-7.2.3, the scene leader and attack team leader must evaluate the fire space conditions and select the appropriate tactic to control and extinguish the fire. If access to the fire space is available, a direct attack should be conducted. Direct attack options include direct attack on the seat of the fire, fog attack, or direct attack from access. If conditions in the fire space prevent access, actions should be taken to improve conditions to permit a direct attack. Options include indirect attack and venting the fire space.

555-7.2.4.1 Selecting the Appropriate Tactic.

a. Direct Fire Attack. In a direct attack, firefighters advance into the immediate fire area (fire space) and apply water directly onto the fire. Direct attack can also include a fog attack into the overhead gases or direct attack from the doorway. See paragraph 555-7.5 for direct fire attack procedures.

b. Venting the Fire Compartment. Venting involves opening an access in the overhead above the fire or cutting a hole in the overhead above the fire to allow hot gases to escape from the fire space. The fire space should be vented only directly to weather or to very large spaces that lead directly to weather. See paragraph 555-7.5.13.

c. Indirect Fire Attack. During an indirect attack, conditions in the fire space prevent firefighters from advancing into the immediate fire area. Water fog is discharged into the space through a cracked open door or a bulkhead or overhead penetration. See paragraph 555-7.6 for guidance on an indirect attack. Following an indirect attack, the space is entered and the fire is attacked directly.

d. Active Desmoking. Active Desmoking during the fire attack can aid the fire party and reduce smoke spread in the ship. See paragraph 555-7.7 for guidance on active desmoking.

555-7.2.5 ISOLATE EQUIPMENT, SYSTEMS AND SPACES. Every effort should be made to secure and isolate those systems and equipment that are the root cause of a fire or have the potential to feed the intensity of a fire. Fires fed by pressurized fuel normally can not be extinguished until the fuel source is secured. In general, when a class A or class C fire occurs that does not force the space to be abandoned, affected equipment and systems are to be isolated except for firefighting equipment and lighting. When a space is abandoned to fire, the affected space should be mechanically and electrically isolated to the greatest extent possible. A Commanding Officer may choose not to isolate such spaces or systems if they are essential to the safety, mobility, or fighting capability of the ship.

555-7.2.5.1 Electrical Isolation. Complete electrical isolation will be very difficult due to the number of cables terminating within and traversing a space. To the extent possible, all electrical equipment, except lighting and ventilation, Halon IC circuits, AFFF Bilge sprinkling SOPV's, vent motor shut down interlocks, and vent damper closures should be secured from outside the affected space at a power distribution panel, load center, or even at the ship's service generator if necessary. The purpose of securing power is to promote the safety of the firefighter, and to reduce ignition sources in the fire space. Effective firefighting may start before electrical power is secured.

555-7.2.5.2 Lighting. The decision to secure lighting must be made on scene by the scene leader. Normally the firefighting party will benefit from improved visibility and therefore lighting should be left energized. Lighting should be secured if it is determined that an actual hazard to the firefighter, such as arcing or sparking, exists.

555-7.2.5.3 Ventilation. Similarly, the decision to secure ventilation must be made on scene. Ventilation is typically left running during the initial attack on the fire with portable extinguishers. The maximum rate of air change promotes the maximum tenability. This is important for evacuating personnel and for the initial firefighters who may not be fully dressed out with breathing apparatus. Typically, ventilation should be secured when firefighters with breathing apparatus arrive on scene, or the space is abandoned by on-scene, unprotected personnel.

555-7.2.5.4 CBR Protection. On ships equipped with a Collective Protection System (CPS) (discussed in Section 555-7.13), maintaining total protection zone supply and exhaust ventilation is essential to continued CBR protection. When a CBR threat exists, the decision to secure total protection zone supply or exhaust ventilation should be made by the Damage Control Assistant, considering the effects of continued ventilation on the fire and the need for CBR protection within the total protection zone. Some of the factors to consider are:

a. Securing supply ventilation may not have an immediate effect on the intensity of the fire. However, if the affected space is relatively tight, the intensity of the fire may diminish, or the fire may be prevented from becoming more intense, once the concentration of oxygen in the space is reduced by the fire. Supplying air to the fire, through the ventilation system or open accesses, may allow the fire to grow to the maximum intensity that it could achieve.

b. On ships equipped with CPS, operating the ventilation supply and exhaust systems is essential to providing continued CBR protection to the total protection zone.

c. Ventilation recirculating systems serving the fire area or the area not protected from CBR contamination should be secured.

d. In spaces protected by Halon flooding, ventilation fans are secured automatically when Halon is discharged. Ventilation fans must remain secured to maintain Halon concentrations sufficient for extinguishing the fire.

555-7.2.6 PROTECT COMPARTMENTS EXPOSED TO FIRE. Many fires spread by heat conduction through bulkheads or decks, without a mechanical breach. If fire spreads, cascading casualties occur and damage control parties are driven away from their tasks. Ships have been lost from uncontained fire even when associated structural damage was easily survivable. In a casualty involving a flashed-over fire, ignition of combustibles located in the compartment directly above the fire may occur within as little as 3 minutes and within 5 minutes for other combustibles in the space. In adjacent compartments on the same deck, ignition of combustibles in direct contact with bulkheads may occur in as little as 7 minutes and within 20 minutes for other combustibles in the space. Unprotected personnel may have as little as 7 minutes before they must exit adjacent spaces because of heat. See Figure 555-1-11 and Figure 555-1-12 for more detail. Exposure protection involves protecting uninvolved areas surrounding the affected space, including above and below. This protection can be provided by removing combustible materials from the uninvolved areas but, when they cannot be removed, hose streams may be applied. Typical exposure protection includes hose streams to cool bulkheads and decks, wetting combustibles, cooling flammable compressed gas cylinders, moving or cooling ordnance, and cooling hatches. Cooling decks of compartments above the affected space is particularly important. A NFTI or firefinder can be used to find hot spots on bulkheads, decks and overheads. If a fire breaches a bulkhead opening, it must be blocked to prevent fire spread. Combustible material may be used as a seal if it is cooled by water fog. If the opening cannot be closed, water spray can be used to prevent heat transfer by convection.

555-7.2.7 SET FIRE AND SMOKE BOUNDARIES

555-7.2.7.1 Fire Boundaries. Any physical barrier can be a fire boundary. Fire boundaries are generally set at fire zone bulkheads or watertight subdivisions, and at decks above and below the fire. Setting a fire boundary means actions taken to close off openings, monitor the boundary for heat or smoke and applying cooling water when required to protect uninvolved areas. Isolating the fire space can reduce a class A fire to smoldering material and control the spread of smoke and hot gases to adjacent spaces. Whenever an access to a previously isolated space is left open for more than a few minutes, air is supplied to the fire, the class A material may rekindle into flaming combustion, and temperatures may increase. During repeated attempts to attack the fire, maintain space isolation and fire and smoke boundaries (except for accesses needed when conducting the attack) so that ground is not lost to the fire if the attacks do not succeed. A primary boundary is set using the bulkheads, deck, and overhead closest to and surrounding the fire. Location of secondary fire boundaries should be designated at the next bulkhead, deck, and overhead outside the primary fire boundary. The secondary fire boundaries are set if the fire spreads past the primary fire boundary. Fire insulation is installed on one side of fire zone (FZ) bulkheads and decks of newer surface ship classes (see paragraph 555-2.1.2.1). When the fire insulation is installed on the side facing the fire, the fire zone boundaries should be used for setting fire boundaries. Most fire boundaries are not protected with fire insulation and cooling by water spray may be required. Cooling water may be required on all sides of the compartment, particularly when the fire is fully involved. It is very important to set boundaries over the fire as quickly as possible, since fire tends to spread faster vertically than horizontally. Combustibles in contact with fire-exposed decks and bulkheads should be removed to avoid ignition and spread of fire. Refer to Figure 555-1-11, which provides ignition thresholds for materials in compartments adjacent to the fire area. It should be the repair party leader's decision to man fire boundaries with charged hoses. Deploying hoses to cool the boundaries may be delayed if boundaries show no indication of heat or extension of the fire across the boundary. Since boundary cooling does not require a sustained effort, a single person may man and operate a 1-1/2 inch fire boundary hose.

555-7.2.7.1.1 Relatively small amounts of water are required to cool bulkheads and decks surrounding flashed-over compartments. This cooling can be achieved while preventing rapid build-up of steam by intermittent applications of water to bulkheads from a 1-1/2 inch hoseline. Continuous flow from a 1-1/2 inch nozzle can create significant amounts of steam. In order to prevent rapid steam build-up and increased risk of steam burns, the firefighter should use initial bursts of water which may be as short as 1-2 seconds. Steam produced from the bulk-

head wetting should be observed and further wetting adjusted so as not to generate more steam than can be tolerated. Time of water application may vary with conditions. Another method of limiting water application is to partially open the vari-nozzle to reduce the flow rate. Initially, water should be applied slowly by directing the stream near the overhead and slowly moving the stream down the bulkhead toward the deck. The pattern should be about 4 feet in diameter. The stream should be continuously swept over the bulkhead for the 15 second period. This technique should keep hot gases and steam in the compartment overhead. Decks are easier to cool than bulkheads. A continuous thin film of water running across the deck is one technique to use. Alternatively, the deck may be cooled by applying water to a depth of 1 inch. Greater depths of water do not improve cooling and increase the risk of burns from hot water to personnel in the space.

555-7.2.7.2 Smoke Boundaries. Smoke boundaries are set to contain smoke. When exhausting smoke to the weather by active desmoking (see Section 555-7.7), smoke boundaries also are used to establish a controlled path for exhausting smoke to the weather. The smoke boundary nearest the fire is designated as the inner smoke boundary and normally coincides with the primary fire boundary. A second smoke boundary, called the outer smoke boundary and located farther away from the fire, also should be set. The area between the inner and outer smoke boundaries is called the smoke control zone. Thus, when the access to the fire space is opened by the attack team, smoke will be trapped in the smoke control zone. Only personnel wearing breathing apparatus should enter the smoke control zone. Breathing apparatus should be activated when smoke is present or when ordered by the scene leader.

555-7.2.7.2.1 The following shall be considered when selecting an outer smoke boundary:

a. The access to the fire space must be within the smoke control zone.

b. Fire plugs and hose reels used by the fire party should be within the smoke control zone to minimize penetrations of the outer smoke boundary.

   1 If active desmoking is to be conducted, it will be necessary to establish and maintain an active desmoking flow path (supply and exhaust) from the smoke control zone to weather. See paragraph 555-7.7.

555-7.2.7.2.2 The inner smoke boundary is set by closing doors and hatches to the fire space. Smoke curtains and smoke blankets can be used to maintain smoke boundaries when doors and hatches are opened by firefighting personnel. They may be used also to set smoke boundaries at doors and hatches that have been damaged and are no longer tight. If standard smoke curtains are not available, welding curtains, fire resistant blankets, wool blankets, or canvas can be used as a smoke curtain by attaching the material to the door frames or hatch edges with spring clamps, vise grips or ″C″ clamps. The least flammable materials, such as welding curtains, wool and fire resistant blankets should be used closer to the fire than the more flammable materials.

555-7.2.7.2.3 Smoke curtains or smoke blankets should be prepositioned at selected doors, hatches, archways, and hatchways.

555-7.2.7.2.4 Supply and exhaust ventilation serving the areas within the smoke boundaries shall be secured in accordance with paragraph 555-7.2.5. Closing ventilation dampers, if installed, at a smoke boundary will aid in maintaining a tight boundary. Recirculation ventilation systems that serve spaces within the smoke control zone or spaces in the smoke exhaust path shall be secured.

555-7.2.7.2.5 Smoke boundaries should be checked periodically to ensure that they remain tight, particularly where smoke curtains are used.

555-7.2.8 CONTROL VERTICAL FIRE SPREAD. A major conflagration can develop suddenly, as in the case of a weapon hit, or over a long period of time, such as when a small fire gets out of control. In both cases the fire compartment will become too hot for direct entry through hatches and doors. If intolerable heat denies access to the fire compartment, efforts on the same deck as the fire should be directed toward positioning manned hoses to establish boundaries against horizontal fire spread. Concurrently, efforts on above decks must focus on applying water by hose lines to the deck of the compartment immediately above the fire to prevent heat transmission through the deck.

555-7.2.8.1 If the space above the fire has a raised deck, as commonly found in electronics spaces, water should be applied beneath the raised deck. It should be anticipated that the ship will develop a list due to flooding or firefighting water. Ship list must be taken into account when applying cooling water to the deck. Ideally, water should be applied to the high side so water can flow by gravity across the deck. Excess water must be removed on the low side of the compartment by cutting or knocking drain holes in bulkheads or using portable dewatering equipment. If the hole will expose a protected area of the ship to CBR contamination, the potential for and consequences of allowing CBR contamination into that protected area should be considered.

555-7.3 HOSE HANDLING

555-7.3.1 GENERAL. The objective of hose handling is to accomplish a rapid placement of hose at the desired location ready for use and to provide mobility during the fire as changing conditions necessitate. The following practices can more efficiently accomplish these objectives.

555-7.3.2 ACTION TO ENSURE READINESS

a. Hose properly faked or rolled to avoid delays caused by sloppy stowage.

b. Coupling hand tight to facilitate replacing a hose length or adding a hose length without wasting time finding and using spanner wrenches. A hand tight coupling having a gasket in good condition will not leak. Gaskets should be soft and pliable.

c. Hose couplings in good condition; not out of round, no apparent hose slippage from the coupling, and no thread damage.

d. Hose reel brakes set tight enough to avoid freewheeling, but loose enough to permit hose unreeling using reasonable effort.

555-7.3.3 CONTROLLING THE HOSE

a. A 1-1/2 inch hose can be deployed and controlled by one person in an initial quick attack. Sustained operation requires one hoseman backing up the nozzleman to assist in nozzle handling, and additional hosemen to tend the hose and operate the fireplug. See paragraph 555-5.4.5 for minimum hose manning requirements.

b. A 2-1/2 inch hose can be deployed and controlled by two persons in an initial quick attack. Sustained operation requires that one or two hosemen back up the nozzleman to assist in nozzle handling, and that additional hosemen tend the hose and operate the fireplug. See paragraph 555-5.4.5 for minimum hose manning requirements.

c. The function of hosemen that back up the nozzleman is to (a) push the hose forward to compensate for the nozzle reaction force pushing opposite the direction of flow; (b) hold the weight of the hose and (c) move the hose left, right, up, down to assist the nozzleman in directing the stream. The latter requires team work as in

lifting the hose behind the nozzleman when he is directing the stream down or moving to the left when he is directing the stream to the right. The hosemen's actions should not be fighting the nozzleman's efforts. The hosemen's position is as close to the nozzleman as possible without impeding his movements.

555-7.3.4 ADVANCING THE HOSE

a. Hose is easiest to advance when the nozzlemen carries the nozzle, assisted by his backup hoseman, and additional hosemen carrying each coupling. Additional personnel, if available, should be located at the midlength of each 50 foot section of hose and at turns which the hose makes. This procedure reduces friction due to dragging on the deck and prevents couplings from being snagged on door openings or other obstructions. Additional persons can slow down the evolution, inhibit nozzleman mobility, and create higher accident potential.

b. Hose should be advanced to the nearest practical location of use prior to charging with water. A water filled hose line is heavy and bulky and slows down the advancement evolution.

c. As soon as the nozzleman is in position and the dry hose completely off the rack, the nozzleman asks for water from the last hoseman. As the water fills the hose, hosemen straighten any kinks and check hose couplings for leaks. Opening the nozzle slightly will allow air to escape.

d. Reeled, non-collapsible hose is typically stowed full or partially filled (except when drained due to freezing conditions). One person may rapidly place a reeled non-collapsible hose line in service by charging or pressurizing the line while at the reel and then advancing with the nozzle end for a quick attack. The distance one person may be able to advance a non-collapsible hose will be limited by the strength of the individual.

e. When hose lines are advanced and manned in the weather, the random staggering of personnel on either side of the hose is of little significance. For maneuvering below decks, it is best to place hosemen on the same side of the hose. This principle allows easier maneuverability in narrow areas and makes space available for equipment and personnel to pass along the hose. Similarly, to minimize interference when passing two hoses through a door, all hosemen for either hose should be positioned on the outside of the hoses so that the two hoses pass between them and the other hosemen.

f. When bringing a charged hose down an inclined ladder, one method is to carry the hose over one's shoulder with the nozzle in front in one hand. Proper hose tending by the hosemen will ensure that the nozzleman on the ladder maintains his balance.

555-7.3.5 TENDING THE HOSE

a. Once the hose is deployed and charged, the hoseman nearest the nozzle works closely with the nozzleman, helping the nozzleman to position and direct the hose. The hosemen farthest from the nozzle feeds or retrieves hose as required by the nozzleman and operates the fireplug as required; they can move along the hose as needed, or they may be stationed at a critical location, such as the door or hatch into the fire space.

b. If hose tending will allow, the hosemen farthest from the nozzle can function as a communications link between the attack team leader and the scene leader.

c. To avoid unnecessary heat stress due to added time and hose handling in the hot environment and to minimize the delays between attacks on the fire, the attack hose may be left in the fire space with the nozzle closed, rather than moved in and out as attack teams are changed. The nozzle should be left where it can be located easily and retrieved safely. The exiting attack team leader will report to the scene leader to tell him the location of the nozzle and the conditions in the space. If the attack hose is left in the fire space when the attack

team leaves, it is not necessary to close the valve at the fire plug. If the space is being abandoned, the hose should be withdrawn so that the accesses to the space can be secured.

555-7.4 NOZZLE HANDLING

555-7.4.1 The mission of the nozzleman is threefold. He must direct the stream where desired, he must do so with the appropriate pattern, and at the appropriate flow rate. All three of these actions are subject to continuous change as conditions dictate. The primary factors that affect how this mission is accomplished are type of breathing apparatus worn (interference with hose line) and the physical build, strength, and position (standing, crawling, lying, crouched) of the nozzleman. Because of physical differences between individuals and variations in fire scenarios, there is no specific nozzle handling method required to accomplish the nozzleman's mission. The correct way for a nozzleman to handle a nozzle is the method which permits him to accomplish his mission in the most physically comfortable manner. Figure 555-7-1, (A-H), shows some acceptable hose line and nozzle handling methods. See paragraph 555-4.8 for nozzle information.

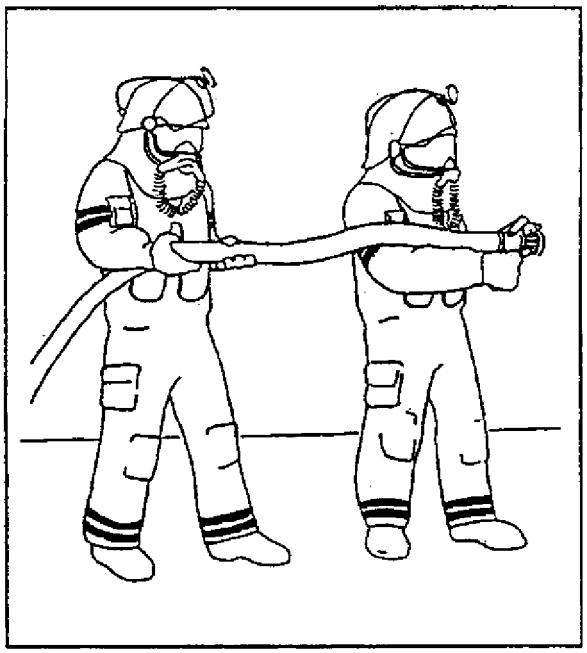

A. OVER THE ARM, USING PISTOL GRIP, GRASPING PATTERN SHROUD

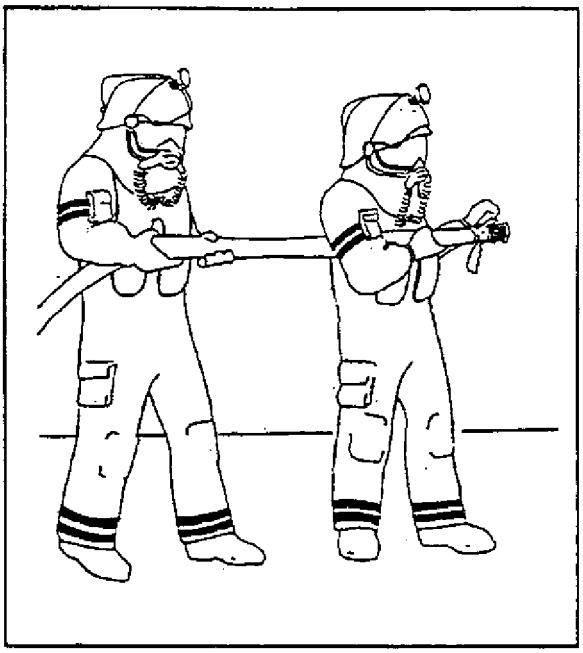

B. UNDER THE ARM, NOT USING PISTOL GRIP, GRASPING SHUT OFF BAIL HANDLE.

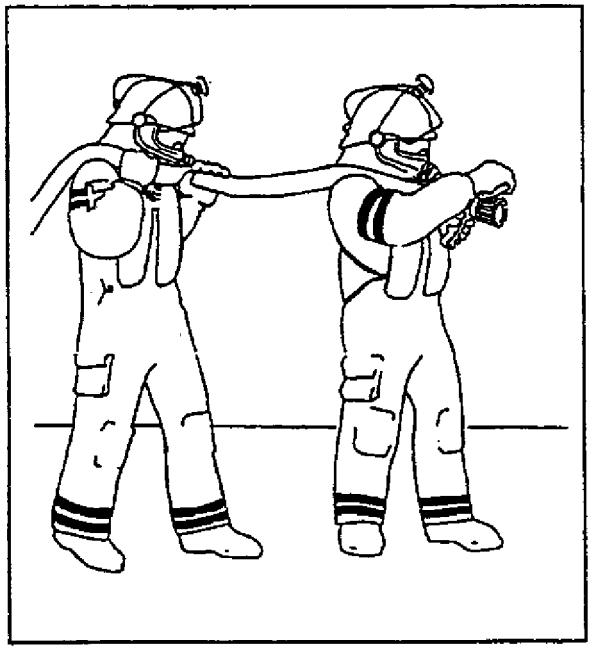

C. OVER THE SHOULDER, USING PISTOL GRIP, GRASPING SHUT OFF BAIL HANDLE.

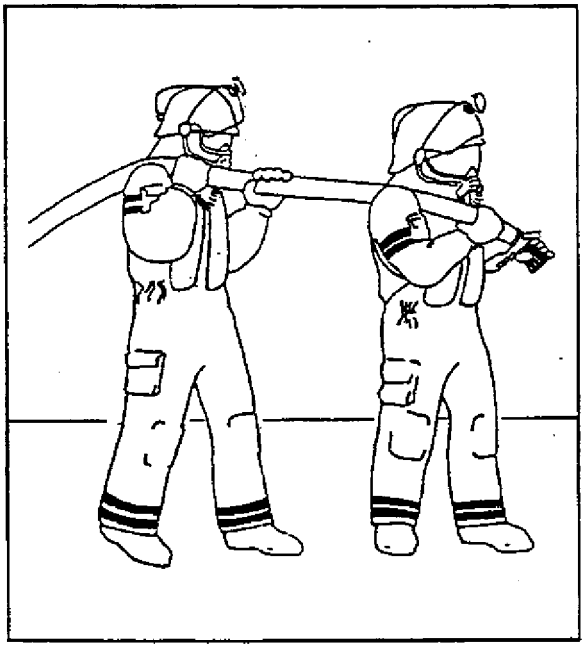

D. OVER THE SHOULDER, NOT USING PISTOL GRIP, GRASPING PATTERN SHROUD.

Figure 555-7-1 (A-D) Hose Line and Nozzle Handling Methods (Sheet 1 of 2)

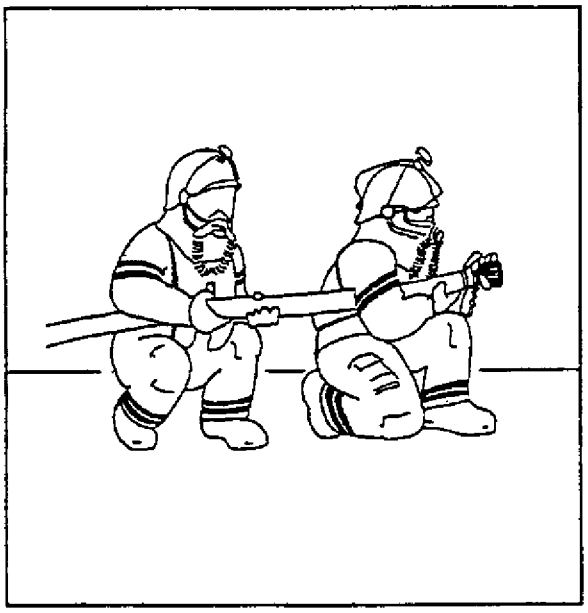

E. UNDER THE ARM, NOT USING PISTOL GRIP, GRASPING THE PATTERN SHROUD.

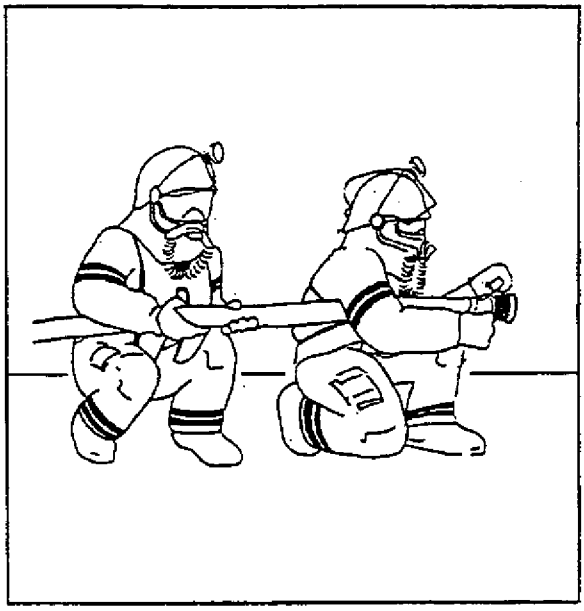

F. UNDER THE ARM, USING PISTOL GRIP, GRASPING THE SHUT OFF BAIL HANDLE.

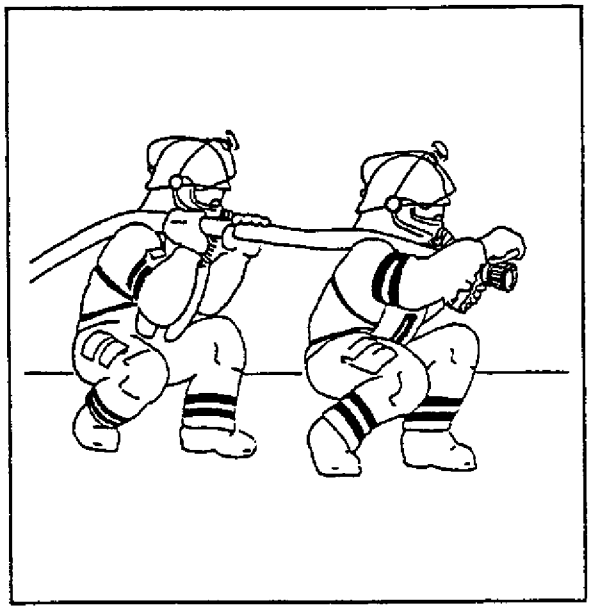

G. OVER THE SHOULDER, USING THE PISTOL GRIP, HAND ON PATTERN SHROUD, DIRECTING STREAM DOWN.

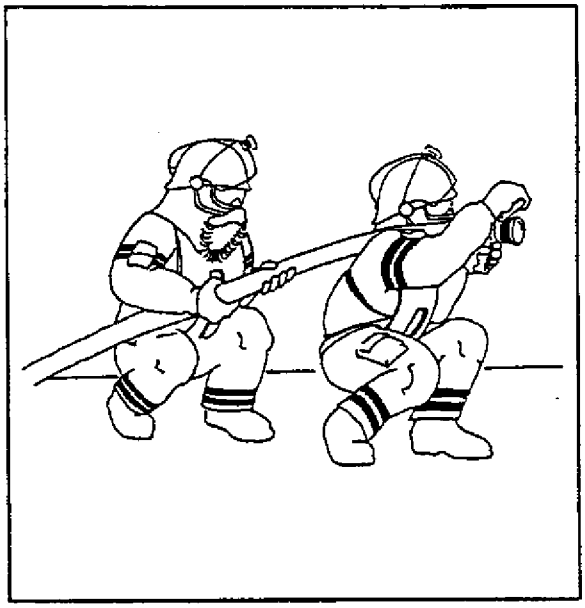

H. NOZZLEMAN OVER THE SHOULDER, BACKUP MAN UNDER THE ARM, USING PISTOL GRIP, HAND ON PATTERN SHROUD, DIRECTING STREAM UPWARD.

Figure 555-7-1 (E-H) Hose Line and Nozzle Handling Methods (Sheet 2 of 2)

555-7.4.1.1 The nozzleman should devote one hand to holding the nozzle and directing the stream. The other hand should be available to alternate between the pattern shroud and the bail shut-off handle to control pattern or flow variations as appropriate. This hand, knuckles up, on top of the nozzle is typically the most comfortable and provides for the least movement between pattern shroud and bail handle. When using a tactic of short bursts of agent, this hand would typically be kept on the bail. For continuous flow tactics, keep the hand on the shroud for instant pattern variations and to assist in aiming the nozzle.

555-7.4.1.2 The nozzle may be held with the hose line over the shoulder or under an arm, whichever works best to provide the necessary control.

WARNING

When holding the hose line under an arm, the OBA breathing bag on that side may be collapsed if the hose is pressed against it.

555-7.4.1.3 On the 1-1/2 inch vari-nozzle, the pistol grip handle may or may not be used, whichever methods works best and is most comfortable for the nozzleman.

WARNING

When fighting interior fires, prior to entry or opening up a space, preset the nozzle pattern and crack open the shut off for a moment to bleed out air and ensure that the nozzle is not clogged. When fighting fires in the weather, perform these checks and fully open the nozzle prior to entering the ″danger″ area.

555-7.4.1.4 For the safety of personnel manning a hose in addition to those nearby, it is important to keep the nozzle end of a hose line under control. Loss of control can knock the hose crew down and direct the stream on others or critical electrical equipment. Loss of hose control can create a whip capable of causing severe injuries and equipment damage. Loss of control results from excessive nozzle reaction force (greater than 100 psi at the nozzle) or from losing the hand grip (slippery gloves, muscle cramps, fatigue, another crew member lets go). When a nozzleman senses that he is losing control, he may apply several techniques to reduce reaction force and regain control. The obvious technique is to shut down. When flow must continue, the nozzleman should throttle down the flow or go to wide fog. These actions are quickly performed when keeping one hand on the bail or the pattern shroud at all times. The operation of adjusting to wide fog or throttling back should also be used when personnel manning the hose are making significant changes in position, climbing over objects, or operating on ladders, when it is not feasible or safe to shut down. The same tactic should be applied when changing nozzlemen while not shutting down.

555-7.4.1.5 If a hose crew loses their grip and a hose line becomes a thrashing whip, e.g., wild hose, three methods of regaining control are:

1. Shut off the flow at the fireplug to stop or reduce flow in order to safely approach and shut off the nozzle.

2. Take control of the hose line at the non-moving point and fold hose twice into a ″Z″ or ″Z-kink″ to stop flow (1-1/2 inch hose only).

3. Take control of the hose line at a non-moving point and advance along the line toward the nozzle regaining control of the line while advancing.

555-7.4.1.6 Nozzle pattern selection guidance. The spray pattern on the vari-nozzle can be varied through a range of settings from straight stream, narrow angle, medium angle and wide angle fog. The Navy All Purpose Nozzle has two positions for fire attack, solid stream and medium angle (60 degree angle pattern) high velocity fog.

a. Straight stream - Used in direct attack method to wet burning material; for reach and penetration into or stirring up class A material; when deflecting streams off an overhead into a space.

WARNING

Do not use straight stream on a class C fire. See paragraph 555-8.2 for safety precautions when using water on energized electrical equipment.

b. Narrow Fog - The vari-nozzle narrow angle pattern (30 degree) provides good reach but reduced heat absorption. The narrow angle pattern is also effective in providing a forceful push to flame fronts and allows the firefighter to work fires in given directions. It is also used for application of AFFF and as the general firefighting pattern.

c. Wide Fog - The medium and wide angle patterns do not provide as much reach, but do improve heat absorption in the fire area. Used for hose line personnel protection; cooling bulkhead, decks, and overheads.

555-7.4.1.7 The reach of hose streams is controlled by position of the bail handle, nozzle pressure, nozzle pattern and wind. As a rule of thumb, a nozzle in zero wind, fully open, and at 100 psi will reach approximately 100 feet in straight stream, 50 feet in narrow fog, and 5-10 feet in wide fog. Shipboard nozzle pressures are typically less than 100 psi but can vary significantly with total fire main demand and the number of pumps on line. High winds in the weather can render fog streams ineffective and reduce straight streams effective range by 25 to 50 feet. Since the nozzleman cannot control wind or nozzle pressure (both subject to continuous change), he must exercise skill, judgment, and caution in his mission to properly apply agent on the desired target.

CAUTION

When operating with an inline AFFF eductor, the 95 gpm 1-1/2 inch nozzle must be used and the bail operated shut off must be in the full open position. Throttling the flow rate will cause loss of AFFF concentrate being educted into the salt water stream. Using 125 gpm 1-1/2 inch vari-nozzles will decrease hose stream reach.

555-7.4.1.8 Flow rate of the vari-nozzle can be controlled by throttling the bail handle to a partially open position. In a direct fire attack, this can reduce the formation of steam and help maintain tenable conditions for the attack team.

555-7.4.1.9 When a scenario calls for continuous application of AFFF or salt water on a fixed target and the required nozzle location has a high danger potential, there are two methods to secure a hose line and permit retreat of the nozzle crew. One method is to use the ″hose control device″ (1-1/2 inch and 2-1/2 inch) issued to aircraft carriers and large amphibious ships. These units snap to a deck tie down and have a lockable universal swivel to set the nozzle stream on the target. The nozzle may be set at whatever pattern is appropriate; typically the bail shut off would be set at the full open position for flight deck use. The second method is to use lanyards to secure the hose line to a fixed object. The difficulty in this procedure is being able to make ties that will hold the nozzle stream on target and to make the ties secure enough so that the hose does not work loose as a result of nozzle reaction.

555-7.4.1.10 When a scenario calls for sustained application of agent from a fixed location and nozzle crew fatigue becomes a factor, the ″hose control device″ or lanyard tie down may be used. These devices should take up nozzle reaction and hose weight so that the nozzleman can easily direct the stream and control the pattern and flow rate. A variation of the lanyard tie down can be applied for this scenario. Make approximately a 10 ft diameter circle with the hose and tie it together where it crosses leaving about 2 feet from the tie to the nozzle. The tie will take up the reaction force, and the short stub to the nozzle will allow movement for the nozzleman to direct the stream.

555-7.5 DIRECT ATTACK

555-7.5.1 GENERAL. This section addresses compartment fires that involve predominantly class A material. These compartments include living spaces, administrative and support spaces, shops, and storerooms. Other portions of this chapter deal with compartment fires where class B and class C fires are of major concern. Many spaces that contain a predominant amount of class A material may also contain limited quantities of flammable liquids. For fully involved compartment fires, the contribution of limited quantities of flammable liquids to a fully involved compartment fire will not change class A firefighting tactics. In spaces such as shops and cleaning gear rooms, class B materials may exist in aerosol spray cans. When exposed to fire, these containers may explode and be propelled into the air, spreading burning fluids and creating a safety hazard to the firefighters.

555-7.5.2 SHOCK HAZARD. Nearly all spaces contain electrical cables and fixtures. However, the shock hazard to the firefighter is low. This is due to frequent use of watertight or spraytight enclosures, cable insulation, electrical circuit protection devices and low voltage (120 volt) electrical service. Historically, the primary shock hazard is caused by direct contact between the firefighter or hose nozzle and an electrically energized object and not by electrical conduction via the hose stream. See paragraph 555-8.2.

555-7.5.3 SPACE REENTRY. Before opening a hot door that swings inward or outward, all firefighters should position themselves on the non-hinged side of the door, and have the hoseline ready (crack open nozzle to bleed off air trapped ahead of the water). Crouch low to allow any rush of heat, smoke, and flames which might occur to pass overhead. When the door is cracked opened, if fire shows or rolls out, direct water fog at the doorway overhead for cooling and control of escaping heated fire gases.

a. When conditions permit entry into the space, the attack team leader typically should be the first man into the space (either the space adjoining the fire or the fire space) to look for fire and assess conditions. He should enter without a hose so that if conditions do not permit entry of the attack team, there will be fewer people and less equipment to back out.

b. Whether attacking from the doorway or entering the space, remain low at all times to take advantage of the cooler air and greater visibility near the deck.

c. Where mission requirements force quick entry under severe conditions, crawling into the fire compartment may be required. Before entry sweep the deck with the hose stream to clear debris, cool hot surfaces and burning materials, prevent burns to hands and feet, and prevent damage to the hose lines.

d. Heat expansion or warping may cause dogs on scuttles, hatches, and doors to jam. Joiner doors may also warp and jam in their frames. Hand tools such as a crow bar may be required to open jammed closures. Wearing flash gloves under firefighters gloves or use of hot mats may be required to protect hands when contacting hot surfaces.

555-7.5.4 DETERMINE DIRECT ATTACK TECHNIQUE. There are three distinct techniques available during a direct fire attack: direct attack on the seat of the fire, fog attack to control the fire, and direct attack from the access. After assessing the fire space condition, the team leader must determine the best technique to use.

a. Direct Attack at the Seat of the Fire. When direct access to the seat of the fire is available, the preferred method is to advance to the seat of the fire and apply water directly onto the seat of the fire for extinguishment (see Figure 555-7-2 and paragraph 555-7.5.5). Access to the fire may be straight forward in the early stage of the fire, but heat, gases, gases, and smoke from an advanced fire make access increasingly difficult.

b. Fog Attack (to Gain Control of Fire). When entry can be made into the fire space, but direct access to the seat of the fire is not possible, firefighters may use a fog attack to gain control of the fire (see Figure 555-7-3 and paragraph 555-7.5.6) and delay or prevent flashover. The following conditions indicate the use of fog attack to gain control:

1 Where overhead gases are burning (known as rollover)

2 Where the seat of the fire is obstructed and water streams cannot be applied directly to the seat

3 Where multiple seats of the fire are growing within a compartment such that one seat of the fire would grow out of control while water is being applied to another seat of the fire

c. Direct Attack from Access. If high temperature denies access to the fire space but the burning material can be reached by a hose stream from an access, water can be applied to the seat of the fire from the access. See Figure 555-7-4 and paragraph 555-7.5.7.

d. If conditions become too severe for these direct attack techniques, the attack team must withdraw and use other techniques, such as indirect attack or venting to improve conditions to allow a direct attack.

PREFERRED METHOD

ENTER SPACE AND
APPLY WATER TO THE SEAT OF THE FIRE

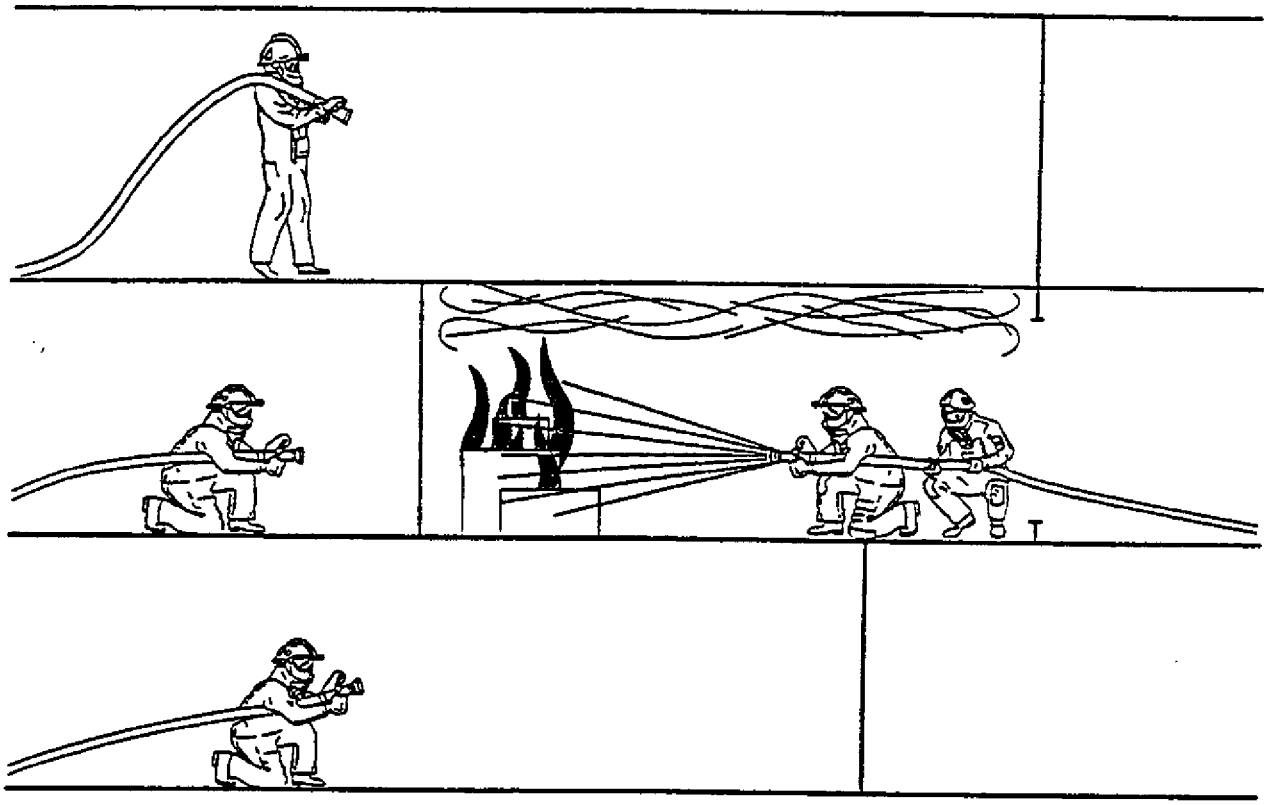

- Keep low and try to keep dry.
- Use short bursts of narrow fog/straight stream to minimize steam. Hit the seat of the fire.
- Don't hit overhead or bulkheads.
- Set fire boundaries - cool as needed.

Figure 555-7-2 Fire Attack - Direct Attack on the Seat of the Fire

IF DIRECT APPLICATION OF WATER
TO THE SEAT OF THE FIRE IS NOT POSSIBLE

ENTER SPACE AND
APPLY FOG BURSTS INTO UPPER GAS LAYER

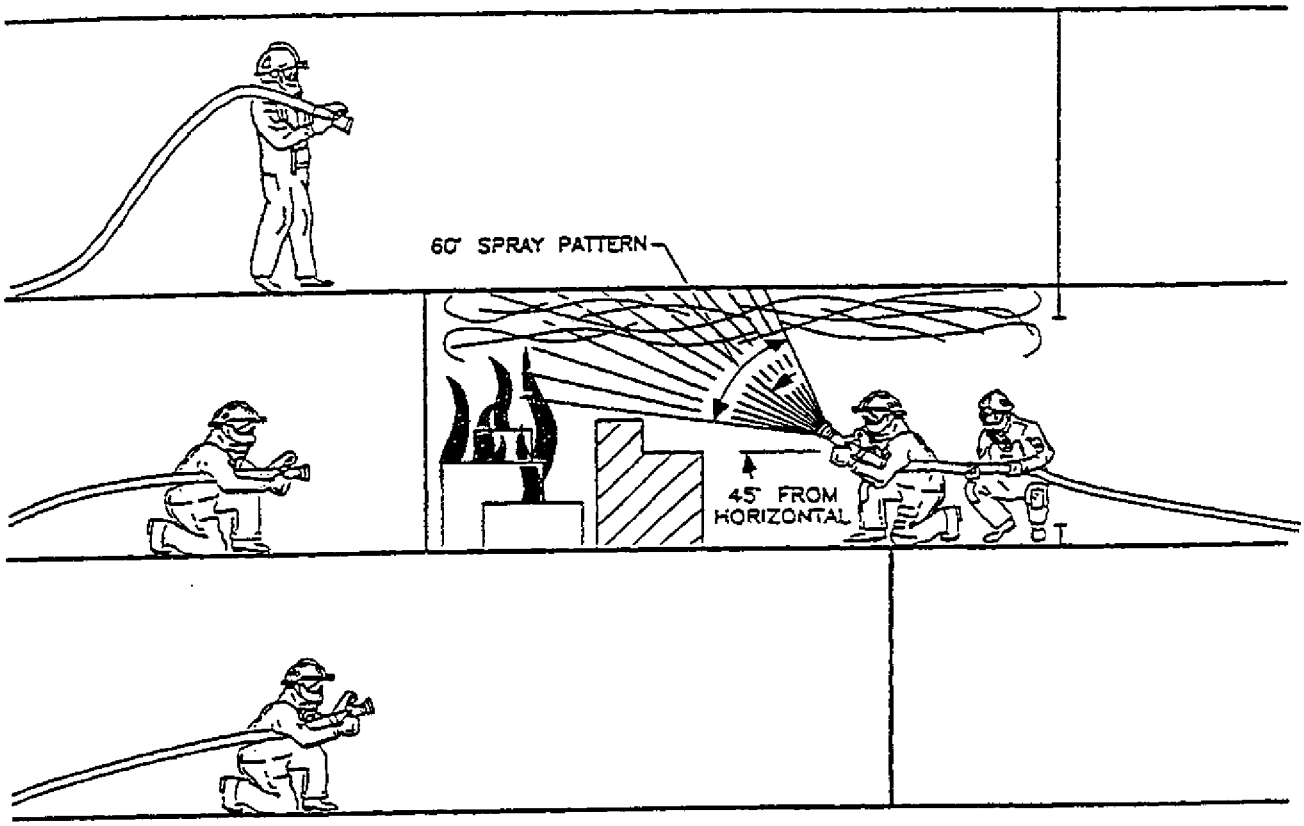

- Keep low and try to keep dry.
- Use short fog bursts, directed at hot gas layer over the seat of the fire to control fire space conditions.
- Pause several seconds between short fog bursts to ensure steam generation is not excessive and to check for flames.
- Advance to the seat of the fire. Adjust nozzle to narrow fog/straight stream. Hit the seat of the fire.
- Set fire boundaries - cool as needed.

Figure 555-7-3 Fire Attack - Fog Attack To Control Fire

IF HIGH TEMPERATURE
DENIES ACCESS

ATTACK FROM AN ACCESS WHEN FIRE CAN
BE REACHED WITH HOSE STREAM

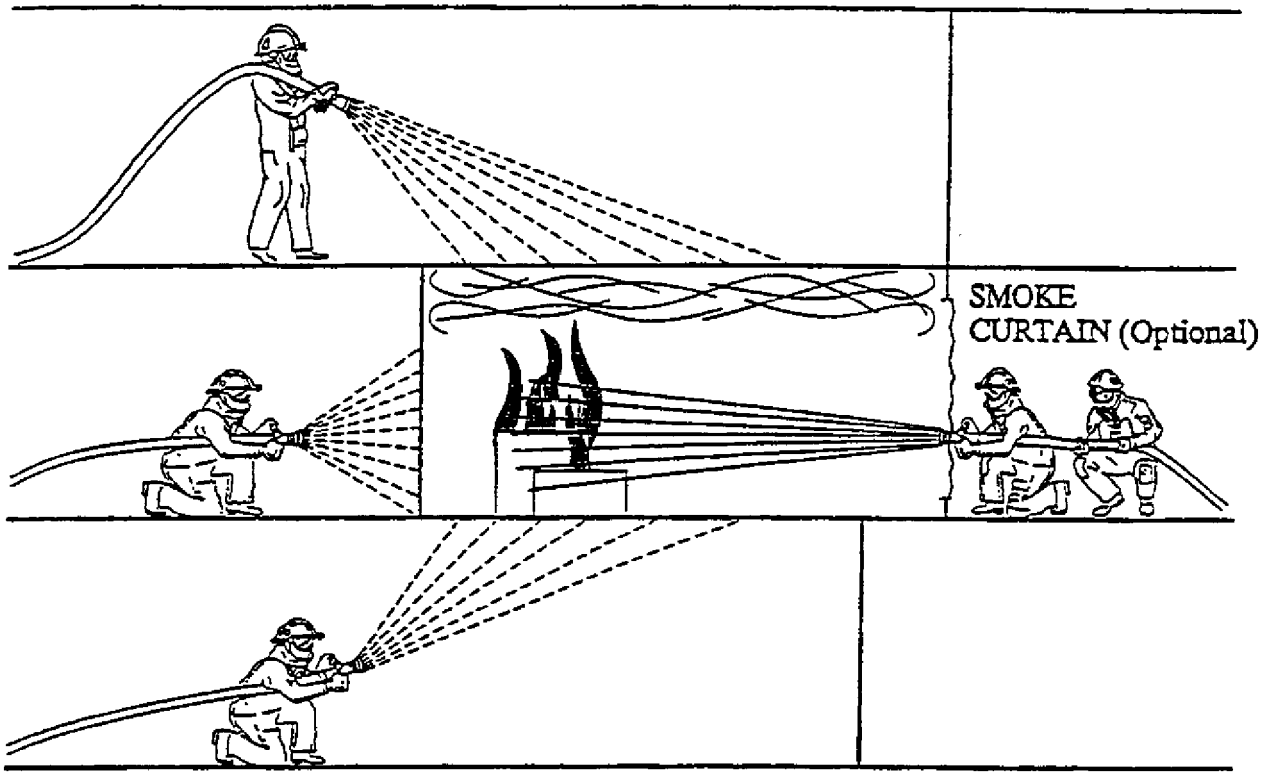

If able to reach fire with hose stream, attack from the access.

- Keep low and try to keep dry.
- Use narrow fog/straight stream. Hit the seat of the fire.
- Fog attack if needed.
- When conditions permit, advance into fire space.
- Set fire boundaries - cool as needed.

Optional: Use smoke curtain to protect nozzleman from heat and steam.

Figure 555-7-4 Fire Attack - Attack from an Access

555-7.5.5 DIRECT ATTACK ON SEAT OF THE FIRE. When direct access to the seat of the fire is available, firefighters advance into the immediate fire area and apply water directly onto the seat of the fire (see Figure 555-7-2).

a. The direct attack technique involves application of short bursts (several seconds) of water with a narrow angle fog or straight stream nozzle pattern onto the seat of the fire. The nozzleman pauses and lets the resultant steam pass over and subside. During this pause, the firefighter listens for noise to help locate fire. After the steam has subsided, water is again applied in a short burst. The duration of the short burst is a function of the amount of steam production. As steam production lessens, a greater duration water burst may be used as the firefighter moves forward and attempts to directly attack the fire or heat source. This technique may be used for boundary cooling (see paragraph 555-7.2.7). Water should only be used when the firefighter is faced with the fire or when the firefighter can not approach closer due to radiant heat. The practice of using continual water flow from all hoses when making interior entry should be discouraged. This does nothing more than disturb the thermal balance in the compartment, which causes large amounts of steam to be produced before the firefighter has a chance to advance on the fire, reduces visibility to the point where he can not see where he is going or where the source of the fire is, and creates potential flooding and stability problems.

b. Full water flow from all nozzles during compartment entry has the additional drawback of wetting the firefighters outside and inside their fire suits. In general, firefighters should avoid getting wet inside their garments since any contact with hot fire gases when wet will result in a water vapor burn as the moisture inside the garment is heated.

c. Hose streams should be directed at the area of combustion, not blindly into smoke. The fire area may be visible, particularly once a space has been vented, if the thermal balance of rising smoke and gases has not been disrupted. Flames and smoldering areas may be located by the use of the Naval Firefighters Thermal Imager with the operator providing directions to the nozzlemen. Burning areas may also be located by trials and error using short bursts of water into the suspected fire location and listening for the crackling, popping sound of water hitting the fire.

d. Overhead fires, such as in cab les, fed from burning combustion gases generated from the fire below will be quickly extinguished as soon as fires at deck level are extinguished. A straight stream or fog stream less than 30 degrees is most effective if energized electrical equipment or cables are not involved. See paragraph 555-8.2. Where the hot upper gas layer is burning, a fog attack (see paragraph 555-7.5.4.b) should be considered before extinguishing the fires below.

e. When the fire is knocked down, shut down the nozzle. Look and listen for flare ups and flame crackling, hitting these areas with sufficient bursts of water for knockdown. When the fire is out, perform overhaul and apply water only as necessary to complete extinguishment. Unnecessary and prolonged application of water adds to ship damage and to weight, stability, and dewatering problems.

f. Along with entry into the suspected or known fire compartment, check all adjacent spaces above and below for fire.

555-7.5.6 FOG ATTACK (TO GAIN CONTROL OF FIRE). When entry can still be made into the fire space, but direct access cannot be gained safely to apply water to the seat of the fire, firefighters may use a fog attack to gain control of the fire, and delay or prevent flashover. Paragraph 555-7.5.4.b. describes the conditions where use of fog attack is desirable.

a. Fog attack is the application of short bursts (several seconds) of water with a medium angle fog nozzle pattern into the overhead gas layer to control the fire. Fog bursts applied directly over the seat(s) of the fire will reduce fire space temperatures and radiant heat and will knock down flaming combustion.

b. In a fog attack, adjust the nozzle to medium angle (60 degree) pattern and point the nozzle upward approximately 45 degrees above horizontal (halfway between floor and ceiling), see Figure 555-7-3. Apply a short fog burst (2 to 3 seconds) with bail handle fully open into the upper gas layer followed by a 2 to 3 second pause. During the pause, the team leader checks for flames and directs additional fog bursts until the flames are knocked down.

c. Use of short fog bursts followed by short pauses will maintain acceptable conditions in the space for firefighters. If the initial fog bursts are too long, the wrong fog pattern is selected, or the nozzle is not directed properly, then too much water may be applied onto the hot steel overhead or the hot upper portions of a bulkhead and excessive steam is generated. This excessive steam could force firefighters to withdraw. Do not use the Navy all-purpose nozzle for fog attack.

d. The flame knock down allows the attack team to advance for direct water spray into the seat of the fire. See paragraph 555-7.5.5 for the technique of a direct attack on the seat of the fire.

555-7.5.7 DIRECT ATTACK FROM ACCESS. If high temperature denies access to the fire space, water may be applied to the seat of the fire from the access. See Figure 555-7-4.

a. The nozzleman may use the bulkhead at the access as a shield. If the seat of the fire can be reached by a hose stream, then the nozzle should be set to straight stream or narrow angle fog directed at the seat of the fire. A smoke curtain can also be hung at the door to shield the attack team.

b. If the seat of the fire cannot be extinguished by direct attack, a fog attack may be used to reduce the fire space temperatures and knock down flaming combustion. See paragraph 555-7.5.6.

c. When conditions permit, the attack team should advance into the immediate fire area and apply water directly onto the seat of the fire.

555-7.5.8 BACKUP HOSE. The decision to layout, charge, man, or bring the back-up hose to the immediate scene of the fire shall be made by the scene leader considering the following:

a. The need for a coordinated second attack line working the fire.

b. The need to control burning combustion gases in the overhead.

c. The need to protect combustible materials exposed to heat from the fire.

d. The need to provide protection for, or aid in the rescue of, the initial attack team in the event of a rapid spread of fire or explosion.

e. The need for back-up in the event of a ruptured hose, loss of firemain pressure to the initial attack hose, or some other unexpected event.

If the back-up hose is laid out, position it so that it does not add unnecessarily to the congestion in the fire space or the adjoining space.

555-7.5.9 MULTIPLE HOSE COORDINATION. Special coordination is required when operating with multiple hose lines. Each hose should be operated as an attack hose, or alternatively as a back up hose if needed. It is the duty of the attack team leader to coordinate this effort in a safe and effective manner and to report status and progress to, and receive direction from, the scene leader. Each manned hose must strike a balance between greater mobility and greater risk brought on by separation. Firefighters must ensure they do not force flames and heat onto another manned hose. This is of particular concern when firefighters attack from different directions. When assigned by the scene leader, the attack team leader (NFTI Operator) should be in a position where he can

best see the fire, observe the operation of the nozzle and urge the nozzleman forward at the proper time. He should ensure the nozzle is being operated properly. The repair party leader keeps track of breathing apparatus operating times, and requests reliefs for nozzlemen and hosemen. The repair party leader ensures that firefighters are available for relief. When at general quarters, the repair party leader will form fresh fire parties and rotate personnel and equipment to reduce fatigue and heat stress.

555-7.5.10 RELIEFS. To compensate for fatigue and heat strain during a prolonged attack, additional personnel should be provided to relieve hose crews. In a high heat stress environment, personnel endurance in a firefighter's ensemble may be limited to less than 10 minutes. The maximum time for personnel to function in a firefighter's ensemble is 30 minutes. If personnel are relieved before becoming completely exhausted, they may be able to return to firefighting duties after a brief rest.

a. The primary objective of orderly reliefs is to maintain an uninterrupted attack on the fire. A secondary objective is to relieve personnel frequently enough to avoid losing personnel to heat strain for the duration of the firefighting effort. The repair party leader, scene leader, and attack team leader plan ahead and work together to provide for and rotate teams and individuals as dictated by the situation.

b. In severe situations, the attack team leader probably will not give any advance notice before being forced to evacuate. The scene leader and repair party leader must anticipate the need for reliefs, without communication from the attack team leader, and have relief personnel don their FFE shortly before they are needed on scene.

c. The attack team may be relieved as a unit, or individuals may be relieved one at a time. A procedure that works well in many situations is to relieve attack team personnel one at a time, keeping the attack hose functional throughout the relieving process. This maintains an uninterrupted attack on the fire and eliminates the extra work and delay from backing a hose out of the space or bringing a hose into the space. It is often helpful for the attack team leader to assume temporary control of the nozzle to reduce confusion when the nozzleman is being relieved.

d. Using personnel being relieved to carry messages and status information from the team leader to the scene leader may help maintain good communications.

e. Reliefs shall be managed by a single point of contact identified by the Damage Control Assistant.

f. Standby or relief personnel should take measures to minimize heat strain experienced while waiting to enter the fire area.

   1 Personnel standing by outside the firefighting area should don the firefighter's ensemble only to the waist until called to relieve personnel on scene.

   2 When staged on weather decks, standby personnel should stay out of the sun and be kept cool.

   3 Drinking water prior to donning the ensemble and breathing apparatus use may increase endurance on the scene.

   4 In the firefighting area, the scene leader should station standby personnel in areas as cool as practical.

g. Relieved crews should leave the scene for an adequate break to reduce their core (inner) body temperature before reassignment to duty. Personnel returning from the scene will need rehabilitation from heat strain. The rehabilitation area may be the same area in which standby personnel are staged. The following guidance applies to rehabilitating personnel returning from the fire area:

   1 Be prepared to help them remove the firefighter's ensemble.

   2 When staged on weather decks, keep personnel out of the sun.

   3 Put them in a cool area exposed to a breeze, or provide a fan to move air. The RAMFAN water mister may be used, if available.

   4 Moisten them down with a wet, cool towel over their head, on their face, wrists, etc.

5 Ensure that each person drinks about 1/2 to 1 liter (about 1/2 to 1 quart) of cold water, such as melted ice water, or other fluid meant to replace bodily fluids.

6 Monitor personnel during the recovery period for signs of heat exhaustion or other problems.

555-7.5.11 WITHDRAWAL. Hose team withdrawal will normally consist of backing out the hose in the reverse order of entry. However, if the attack team leader determines that the hose must be abandoned in place due to an immediate threat to life and the exit is not visible, firefighters should follow the hose by feel back to the exit. It is very easy for even the most experienced personnel to become lost in smoke.

555-7.5.12 CHEMLIGHTS. Portable chemical light sticks can be useful under smoky or dark conditions for marking repair party members, stairs, ladders, exits and equipment.

555-7.5.13 VENTING THE FIRE COMPARTMENT. Additional actions that should be considered when topside, or in a large area open to the weather, such as a hangar or well deck, include cutting holes above the fire to vent heat to the exterior of the ship, and the indirect application of water to the fire compartment via a hole cut in the overhead decks or surrounding bulkheads. If heat can be vented from the overhead of the fire compartment, the resultant temperature reduction and smoke removal will permit attack teams to advance horizontally toward the fire. If there is a weather deck directly above any portion of the fire compartment, heat venting should be attempted by cutting holes at least one foot square in the deck (Figure 555-7-5 and Figure 555-7-7). The larger the hole the quicker the heat and smoke will be vented from below. Similarly, fog nozzles or applicators can be inserted in holes cut into the fire compartment. For safety of hole cutters and firefighters, full protective clothing, including the firefighter's ensemble and hot-work goggles for hole cutters, shall be worn. Holes should only be cut from weather decks or large areas open to the weather, such as hangars and well decks, so personnel will not be engulfed in heat, smoke, and steam that will rapidly escape from the vent hole. Wind direction across the deck must be considered to prevent heat and smoke from affecting other vital activities and vital control areas such as the bridge. **NSTM Chapter 079** provides detail guidance in the operation of cutting units.

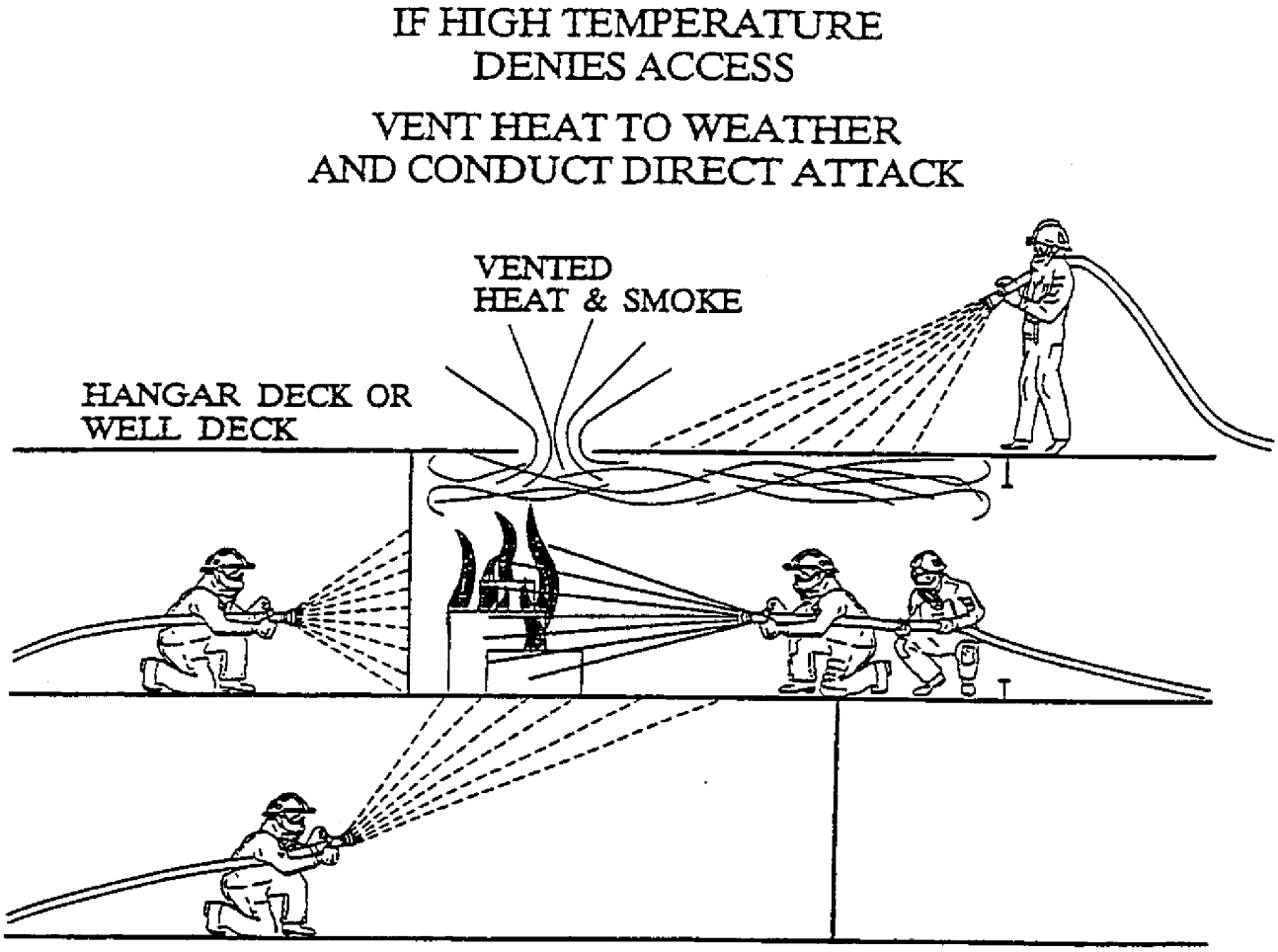

- Cut hole in overhead above fire. Minimum one square foot holes should be cut from weather deck or compartments open to weather (can include hangar decks and well decks).
- Fire boundaryman above fire avoids directing water into vent hole.
- As temperature drops, hose team enters and attacks fire. See Figure 555–7–2.

Figure 555-7-5 Fire Attack - Direct Attack with Vent to Weather

IF HIGH TEMPERATURE DENIES ACCESS

CONDUCT INDIRECT ATTACK

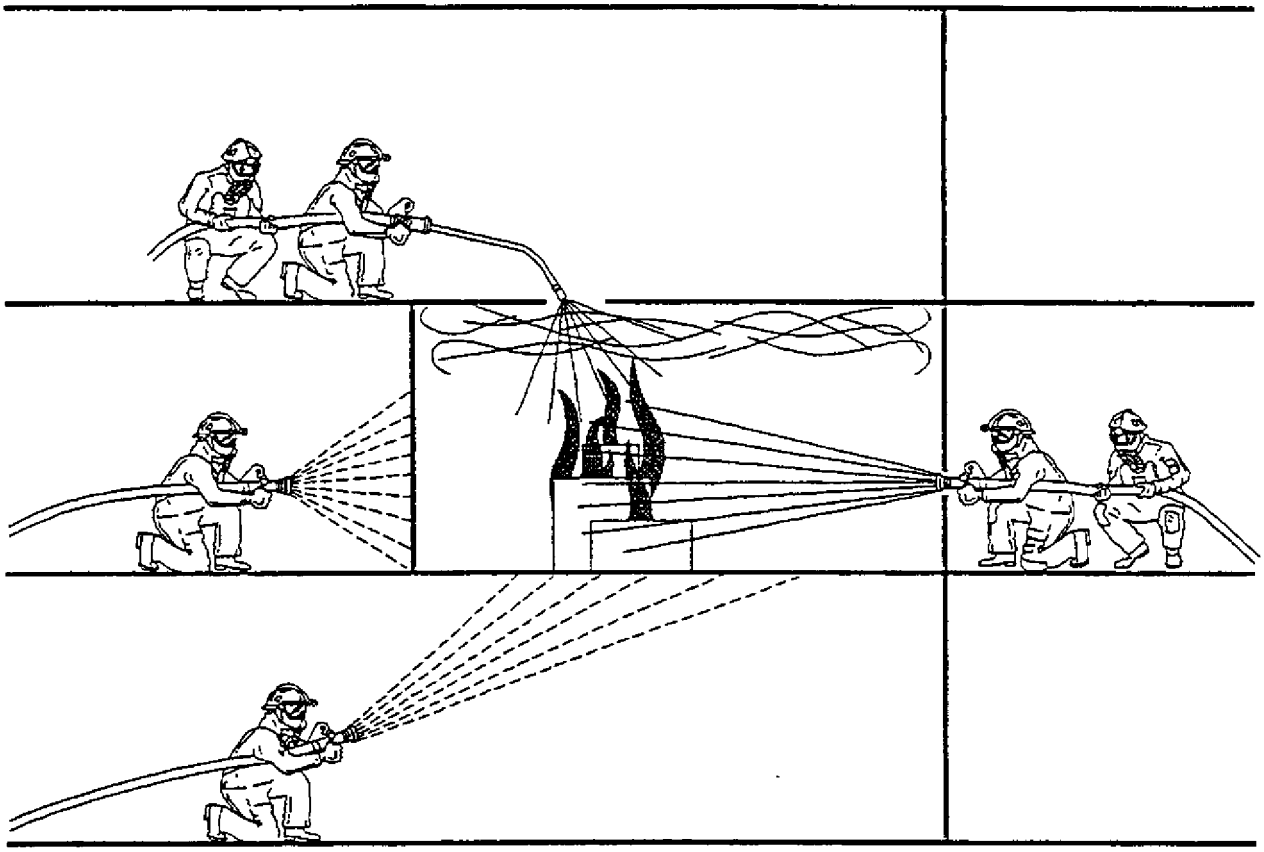

- **To cool fire space, apply water fog into the fire space from a cracked open access or a hole cut in the bulkhead or overhead. See paragraph 555–7.6.**
- **Follow immediately with direct attack. See Figure 555–7–2.**
- **Cool boundaries as needed. See paragraph 555–7.2.7.1.**

Figure 555-7-6 Indirect Attack

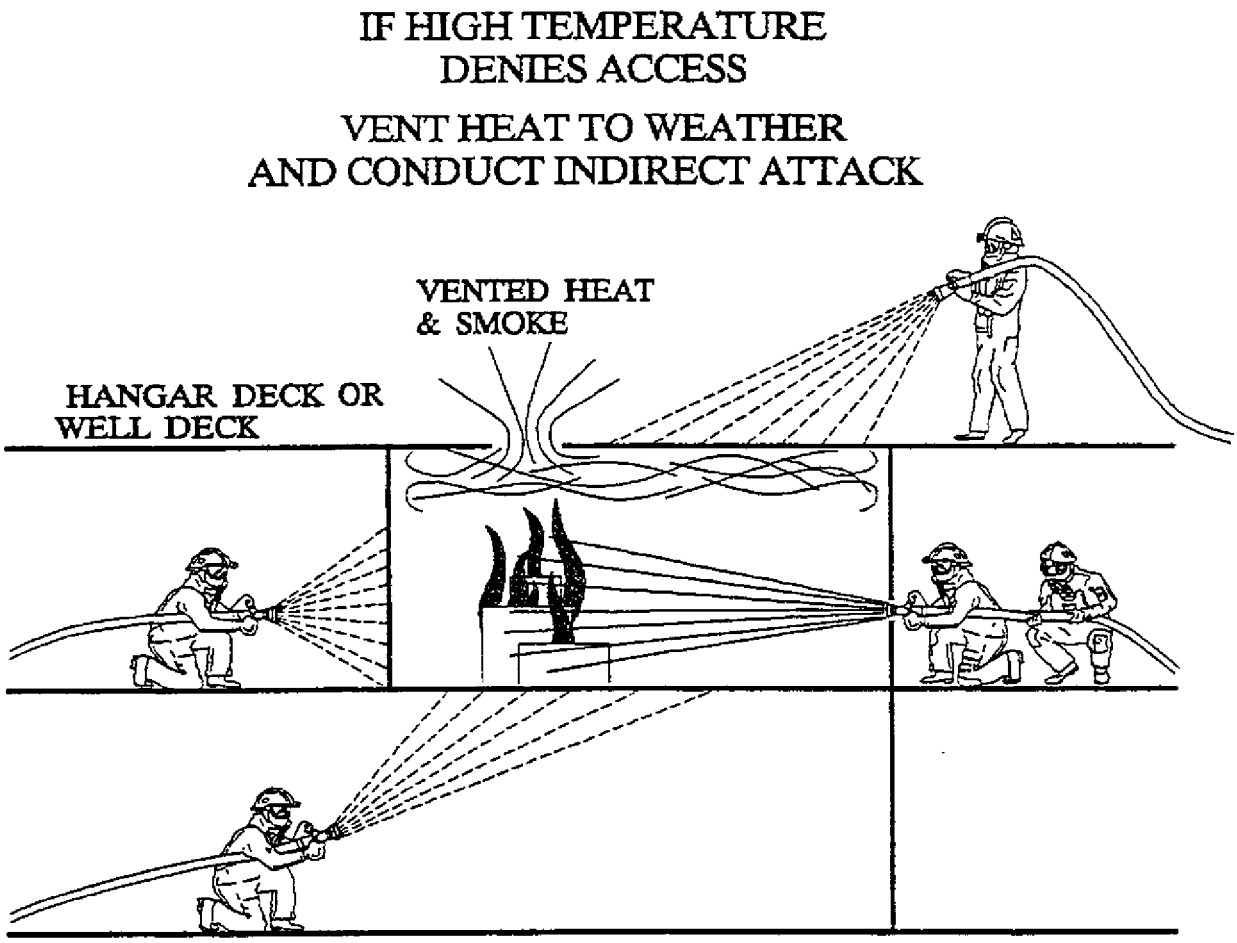

- Cut hole in overhead above fire. Minimum one square foot holes should be cut from weather deck or compartments open to weather (can include hangar decks and well decks).
- Hose team above fire avoids directing water into vent hole.
- To cool fire space, apply water fog into the fire space from a cracked open access or a hole cut in the bulkhead or overhead. See paragraph 555–7.6.
- Follow immediately with direct attack. See Figure 555–7–2.
- Cool boundaries as needed. See paragraph 555–7.2.7.1.

Figure 555-7-7 Indirect Attack with Venting

555-7.5.13.1 If the hole will expose a protected area of the ship to CBR contamination, the potential for and consequences of allowing CBR contamination into that protected area should be considered. See Section 555-6.1 regarding personnel protection and see Section 555-7.13 regarding ships equipped with CPS.

555-7.6 INDIRECT ATTACK

555-7.6.1 GENERAL GUIDANCE. An indirect attack is the application of water fog into the fire space through an existing access or through a hole cut in a bulkhead or overhead (Figure 555-7-6 or Figure 555-7-7). When heat or other conditions deny access to the fire space, an indirect attack may improve conditions to permit reentry for a direct attack. The following guidance applies only to attacking a class A fire.

a. The basic technique for an indirect attack is to apply water fog to the fire space for some time, then stop the water flow, and then assess conditions in the fire space through a cracked open access. Conditions in the fire space can be assessed by using a NFTI to monitor temperatures or by the severity of heat and steam that blow out of the access to the fire space. If it appears that the space can be reentered and the direct attack team is ready to enter the space, immediately reenter the space and conduct the direct attack. Otherwise, continue with the cycle of indirect attack and assessing conditions until the space can be reentered. The attack team leader should adjust water fog application times and indirect attack points based on his assessment of conditions.

b. Do not conduct an indirect attack when people are in the fire space or when a direct attack is underway.

c. Isolate the fire space during the indirect attack. Keep the fire space isolated between indirect attacks.

d. A 4 ft. applicator is effective for an indirect attack, but a vari-nozzle with wide angle fog may be preferred for indirect attack to allow for quick reentry and minimal hose handling to mount the direct attack.

e. If the location of the fire is known, conduct the indirect attack from a point that allows application of water to the fire. Obstructions around the fire should be considered.

f. If the fire space is large, it may be desirable to conduct simultaneous indirect attacks from multiple points. If the fire is spread out or its location is uncertain, separate the attack points to maximize coverage of the fire space by water spray. Communications between attack teams is important.

g. Apply water fog continuously for approximately five to ten minutes for the initial attack.

h. Since the indirect attack may not extinguish the fire, temperatures in the fire space may begin to increase after the indirect attack is stopped. After the final indirect attack, enter the fire space as quickly as practical, within one or two minutes. If practical, use the final indirect attack to cool the access route inside the fire space.

555-7.6.2 INDIRECT ATTACK THROUGH AN EXISTING ACCESS. When attacking through an existing access, crack open the door or scuttle just enough to admit the nozzle. It may be difficult to contain the steam blowing out of the access using a smoke curtain or smoke blanket. Once the nozzle is in place, the attack team should position themselves as far away from the access as they can to reduce their exposure to steam, while still maintaining control of the nozzle. When attacking through a scuttle, one method is to put the scuttle down to help hold the hose (and restrict the steam flow out of the fire space) while the nozzleman directs the nozzle by holding the hose about four to six feet back from the nozzle. Only a few inches of hose should extend beyond the scuttle into the fire space.

555-7.6.2.1 Maintain the water spray until steam blowing from the access forces the firefighters back, or until water has been applied for approximately five to ten minutes. If steam forces the firefighters back before the indi-

rect attack is completed, close the access and retreat. After waiting one or two minutes, crack open the access to assess conditions in the fire space. Based on the conditions found, either reenter the fire space and conduct the direct attack or conduct another indirect attack.

555-7.6.3 ATTACK THROUGH A HOLE CUT IN THE BULKHEAD OR OVERHEAD. Compared to using a cracked open access for the indirect attack, attacking through a hole cut in a bulkhead or overhead will reduce the amount of heat and steam blowing out of the fire space.

555-7.6.3.1 Cut a hole in a bulkhead or in the overhead of the fire space. **NSTM Chapter 079** provides detailed guidance in the operation of cutting units. The hole should be no larger than necessary to accommodate the nozzle or applicator. Insert the nozzle into the hole, see Figure 555-7-6, and apply water fog into the fire space continuously for approximately five to ten minutes. Then, secure the water flow and assess conditions in the fire space through a cracked open access. Based on the conditions found, either reenter the fire space and conduct the direct attack or conduct another indirect attack.

555-7.6.3.2 Under some conditions it may not be possible to man the nozzle continuously for the desired duration of the indirect attack. If an applicator is used under such conditions, it may be possible to leave the applicator in the hole unmanned, with periodic monitoring, and retreat to a cool area while water is spraying into the fire space. Vari-nozzles are not recommended for use in this procedure. For example, such conditions may be encountered when attacking from the space above the fire shown in Figure 555-7-6; see Section 555-7.8.

555-7.7 ACTIVE DESMOKING

555-7.7.1 INTRODUCTION. Active desmoking is removing smoke and heat from the smoke control zone between the inner smoke boundary and outer smoke boundary prior to extinguishing the fire, to aid firefighting efforts and reduce smoke spread in the ship. Active desmoking shall not remove smoke and heat from the fire compartment inside the inner smoke boundary. Smoke and heat from a severe fire can cause mission interruption, damage vital electronic equipment, create a large demand for breathing apparatus, delay fire fighters in locating the fire and present a life threatening environment. Controlling the spread of smoke with smoke boundaries is discussed in Section 555-7.2.7.2. Active desmoking is not required for all fires and is used at the discretion of the scene leader. Generally, the initial direct attack on the fire should not be delayed awaiting active desmoking. Most fires are extinguished before active desmoking is needed. If the initial attack is unsuccessful or if it is likely that the fire attack will go on for an extended period, then active desmoking should be considered. If smoke or heat in spaces beyond the fire space is impeding the attack on the fire, then active desmoking can improve the environment for firefighters.

555-7.7.2 ORGANIZATION.

a. The scene leader requests active desmoking, considering the factors discussed in paragraph 555-7.7.3.

b. The repair party leader approves and directs active desmoking efforts that are not at the immediate scene of the fire.

c. The desmoking team implements active desmoking. The desmoking team will need communications with the repair locker and the scene leader. Desmoking team personnel shall wear breathing apparatus, when required, but, to minimize heat stress, should not wear the FFE coveralls.

555-7.7.3 TECHNIQUES. Fire and smoke boundaries shall be set prior to establishing active desmoking. Active desmoking may require breaking material condition ZEBRA, if set, along the desmoking flow path.

555-7.7.3.1 When using passageways and compartments as the desmoking flow path, the flow path for active desmoking should be in as straight a line as practical. The make up air and smoke exhaust should flow in the same direction; that is, the flow paths should not change direction or cross paths within the same space. If such an arrangement cannot be achieved, such as in a dead-ended situation, portable ducting will be needed for either the make up air or for the smoke exhaust. Rigging portable ducting will require increased time and manpower compared to using passageways for desmoking. Also, less air will flow through portable ducting.

555-7.7.3.2 If portable ducting is used, the maximum smoke removal will be obtained by using portable blowers with a suction duct taking suction from near the overhead of the smoke filled compartment. This can be accomplished by inserting the open end of the suction duct through the center slit of a closed smoke curtain at the doorway (smoke boundary) of the smoke filled compartment. The duct should be secured as high as possible by cinching the smoke curtain around the underside of the duct with spring clamps. The smoke curtain should be raised about one foot at the bottom to allow make-up air to enter the smoke filled compartment, see Figure 555-7-8.

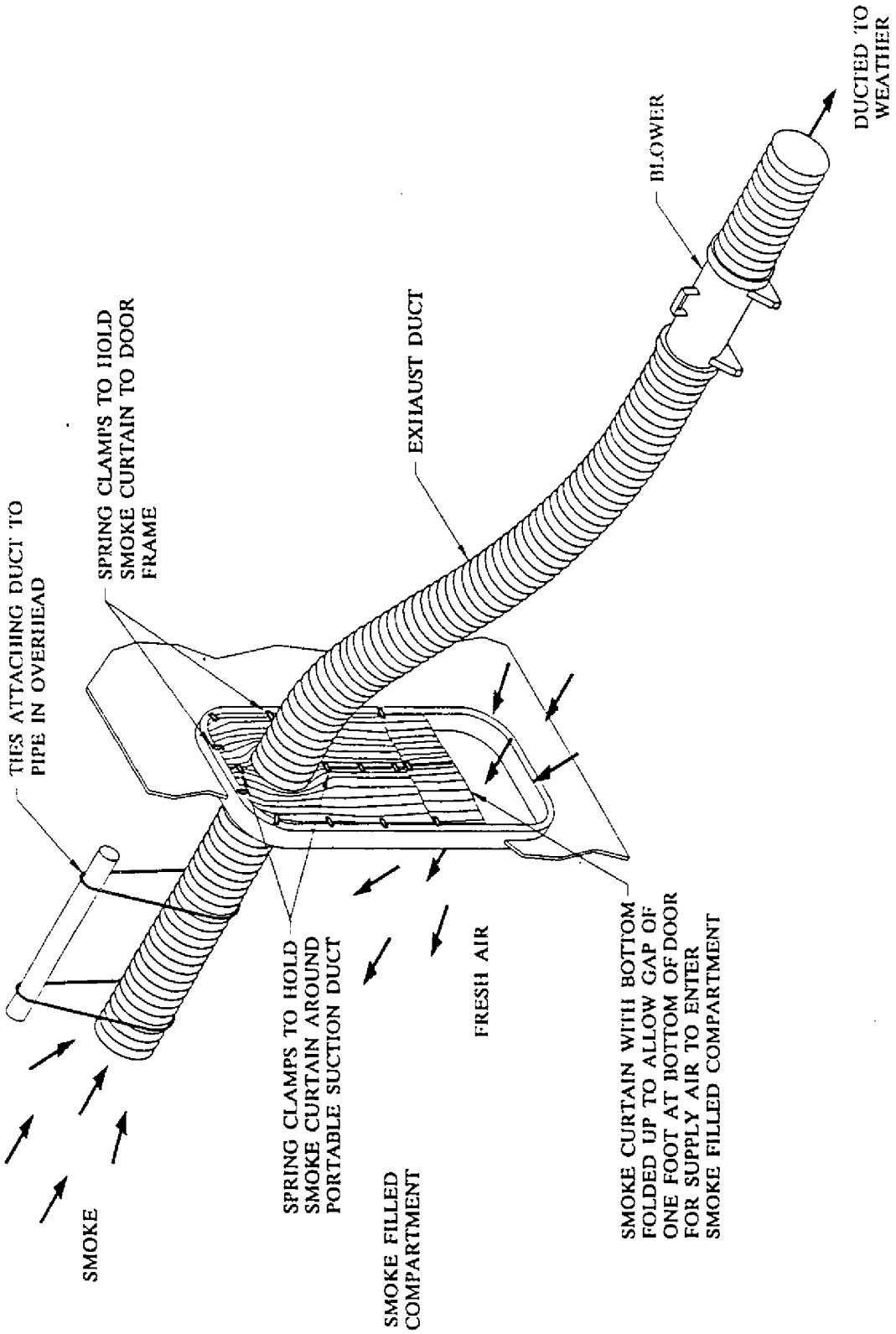

Figure 555-7-8 View Showing Portable Suction Duct Through the Smoke Curtain Located in Door Frame

555-7.7.3.3 After the active desmoking supply and exhaust flow paths are selected and the desmoking planned, it should take two people ten minutes or less to rig the active desmoking. Longer set up times may not benefit the overall firefighting effort. Increased use of manpower may detract from more important firefighting efforts.

555-7.7.3.4 Successful desmoking may require maneuvering the ship so that relative wind carries the smoke away from air supply intakes.

555-7.7.3.5 Ships are encouraged to pre-plan active desmoking, to include such plans in repair party documentation, and to practice active desmoking with smoke generators as part of fire drills. Depending on the arrangement of the ship, a single active desmoking scheme may provide desmoking for possible fires in any of several spaces in an area of the ship.

555-7.7.3.6 Active desmoking is performed to remove smoke from the smoke control zone and is accomplished in the following order:

a. Prepare a desmoking flow path

b. Rig portable blower

c. Establish and maintain desmoking

555-7.7.4 PREPARE A DESMOKING FLOW PATH. A fresh air supply path as well as a smoke exhaust path is required for effective desmoking. Passageways are effective desmoking paths. Ideally, passageways should be selected such that the fresh air supply access from weather and the smoke exhaust access to weather are separated port and starboard, or fore and aft, or both. The smoke exhaust point should be clear of ship ventilation system air intakes. Doors and hatches must be closed along the boundaries of the exhaust path. Do not include the damage control repair station, staging areas, or areas with equipment sensitive to heat in the exhaust flow path. Installed ventilation to the passageways must be secured or isolated. By placing portable fans or blowers at the exhaust weather access, smoke can be pulled effectively from the smoke control zone, along the exhaust path and and out to weather while replenishment air is drawn in from the supply weather access, see Figure 555-7-9. This arrangement has been tested successfully where desmoking involves compartments and passageways within one fire zone (length of a fire zone does not exceed 131 feet) and fresh air and smoke is pulled up or down no more than one deck. See Figure 555-7-10 (A-D), Figure 555-7-11 (A-D), and Figure 555-7-12 (A-C) for examples of active desmoking flow paths on different types of ships. If using passageways and compartments as the smoke exhaust path is not practical, rig blowers with portable ducting for the smoke exhaust flow.

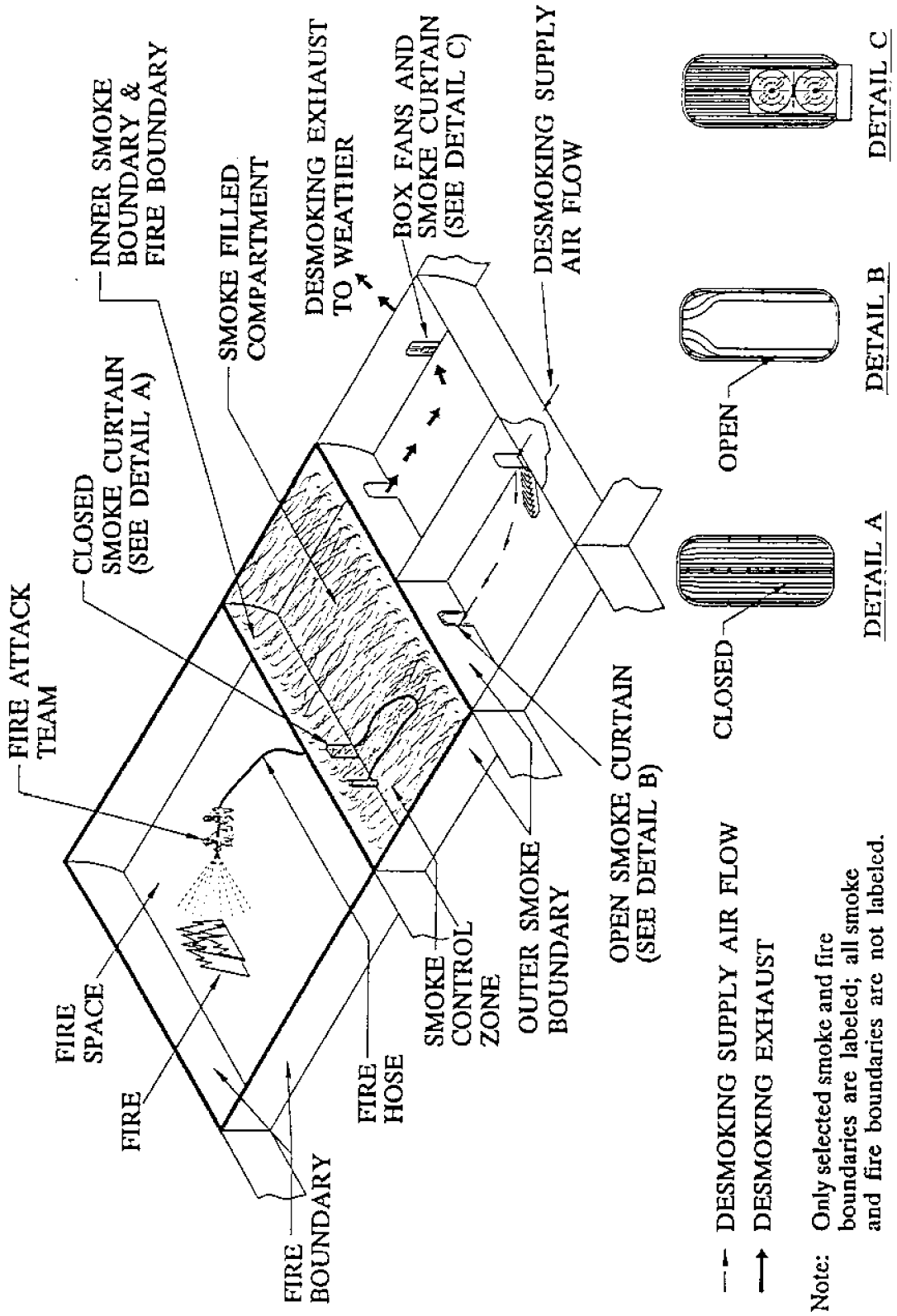

Figure 555-7-9 View Showing Relationship of Fire Space, Smoke Boundaries, and Smoke Control Zone

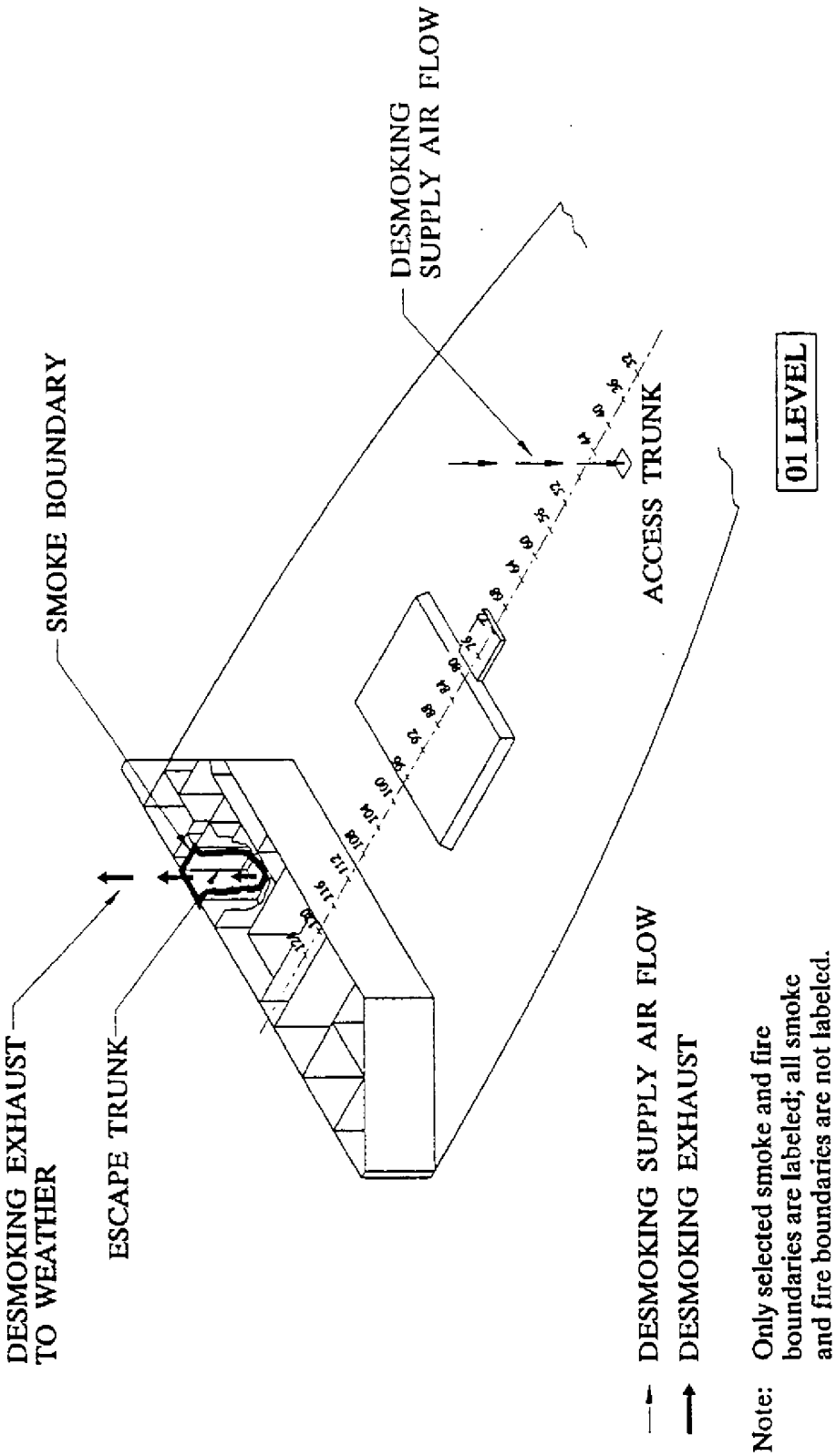

Figure 555-7-10 Active Desmoking for a Destroyer with the Fire in a Space on the Second Platform (Sheet 1 of 4)

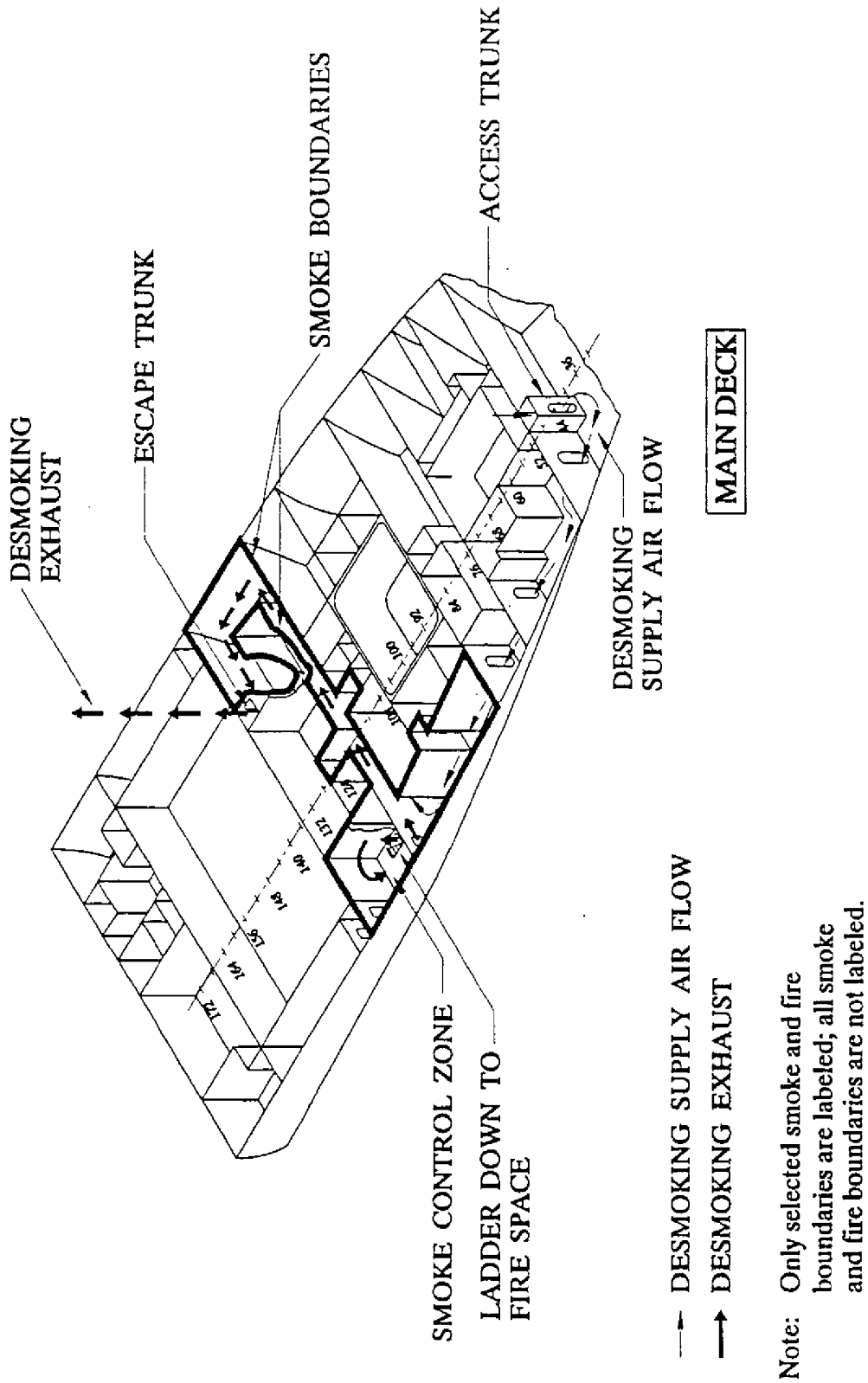

Figure 555-7-10 Active Desmoking for a Destroyer with the Fire in a Space on the Second Platform (Sheet 2 of 4)

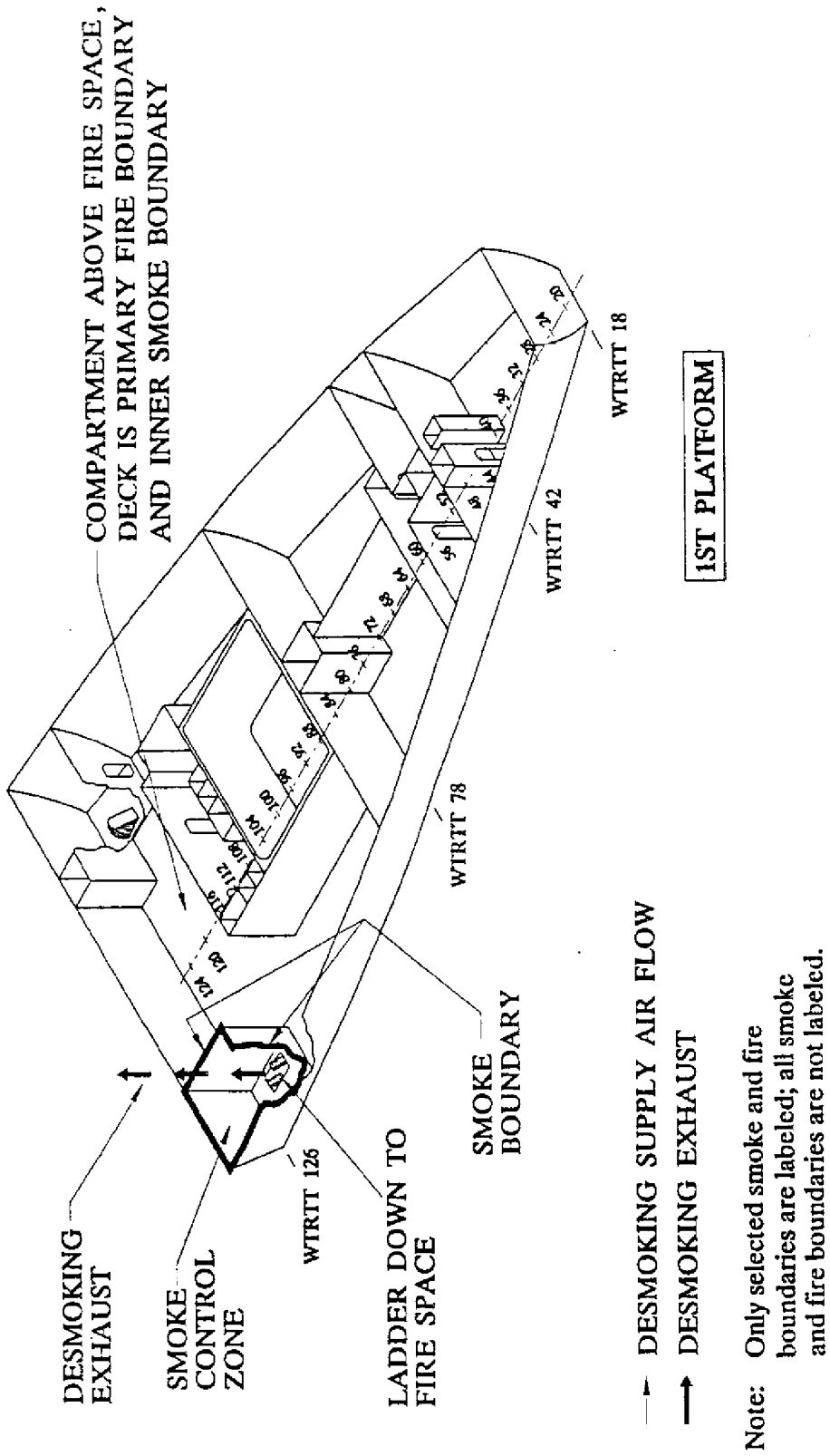

Figure 555-7-10 Active Desmoking for a Destroyer with the Fire in a Space on the Second Platform (Sheet 3 of 4)

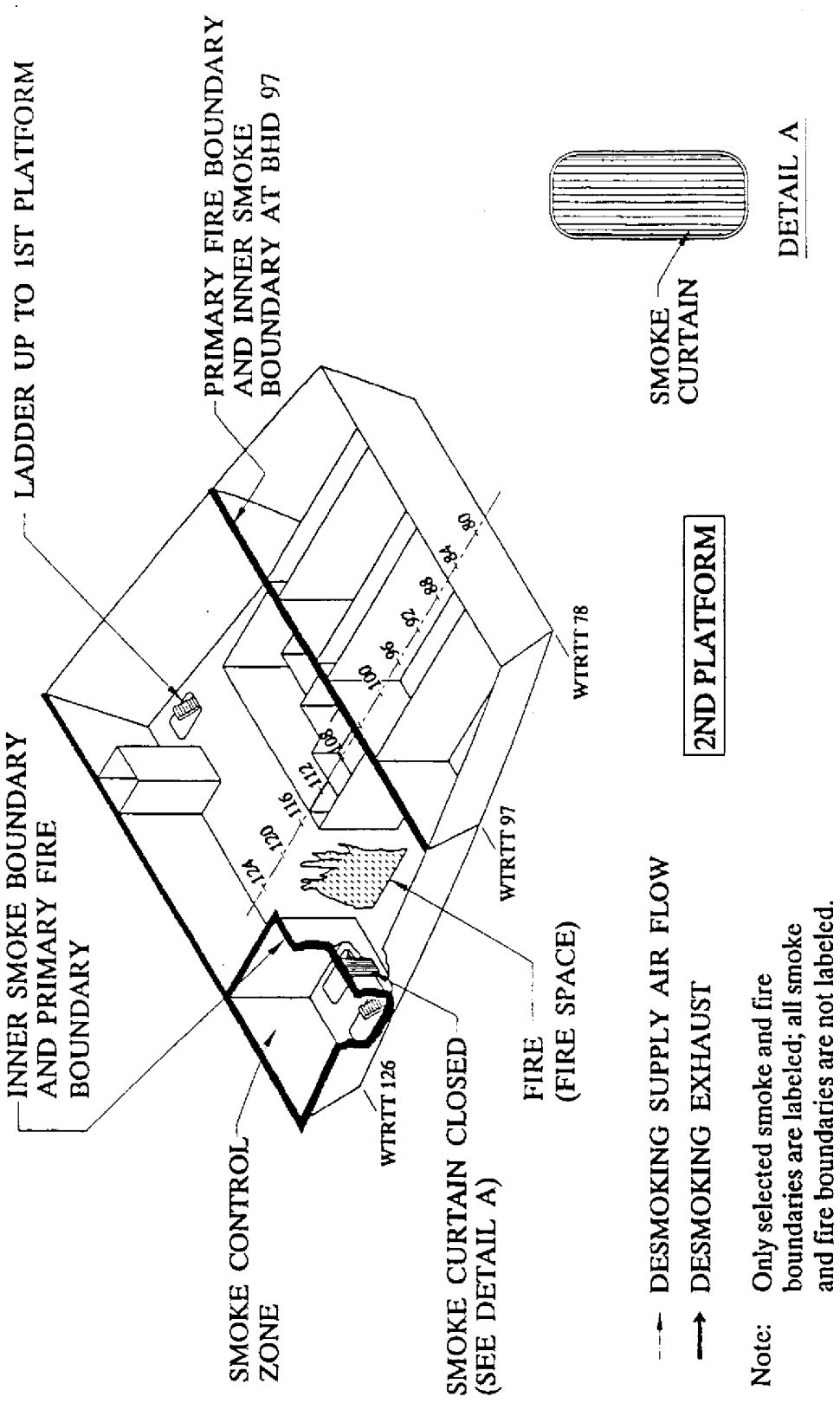

Figure 555-7-10 Active Desmoking for a Destroyer with the Fire in a Space on the Second Platform (Sheet 4 of 4)

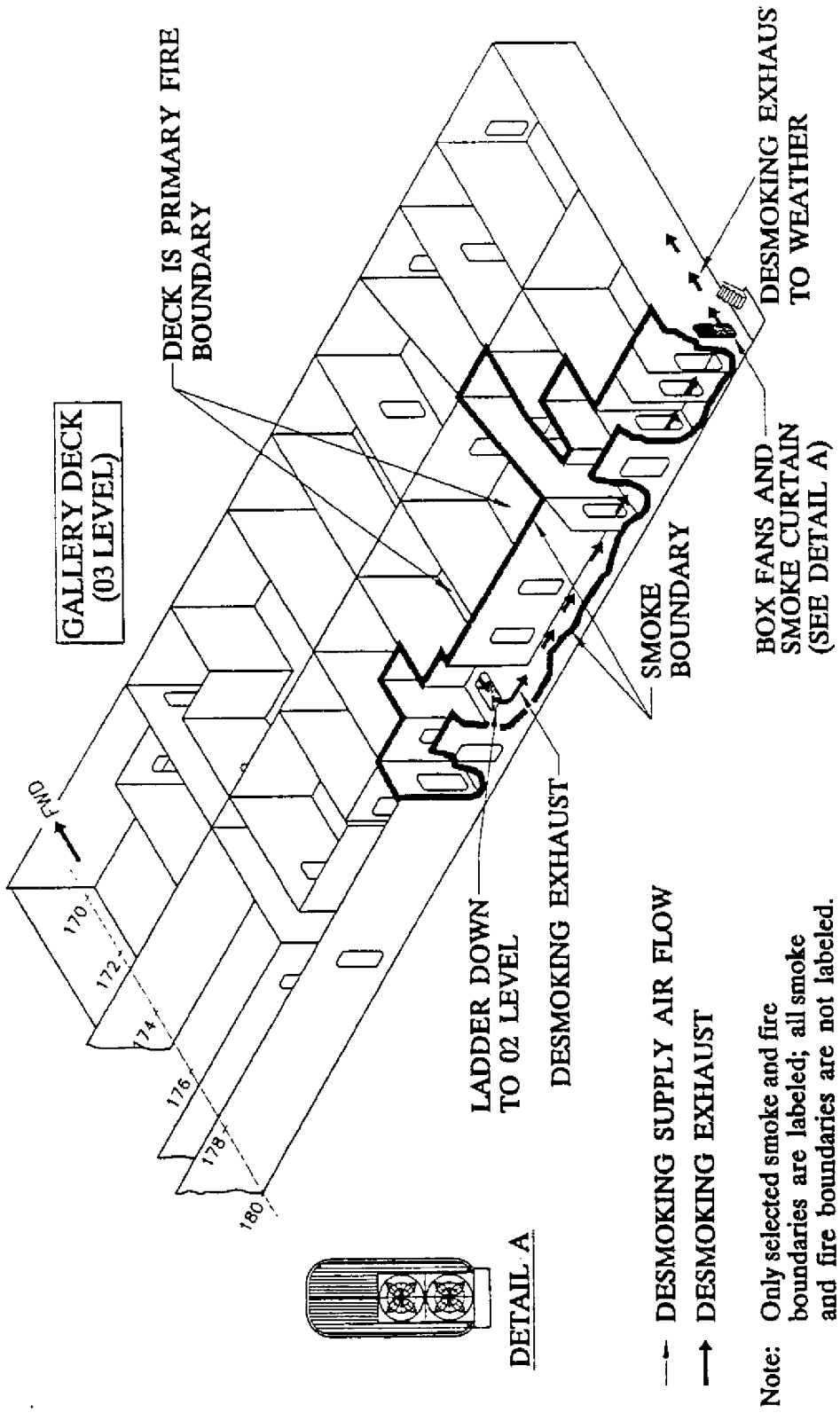

Figure 555-7-11 Active Desmoking for an Aircraft Carrier with the Fire in a Space on the 02 Level Amidships (Sheet 1 of 4)

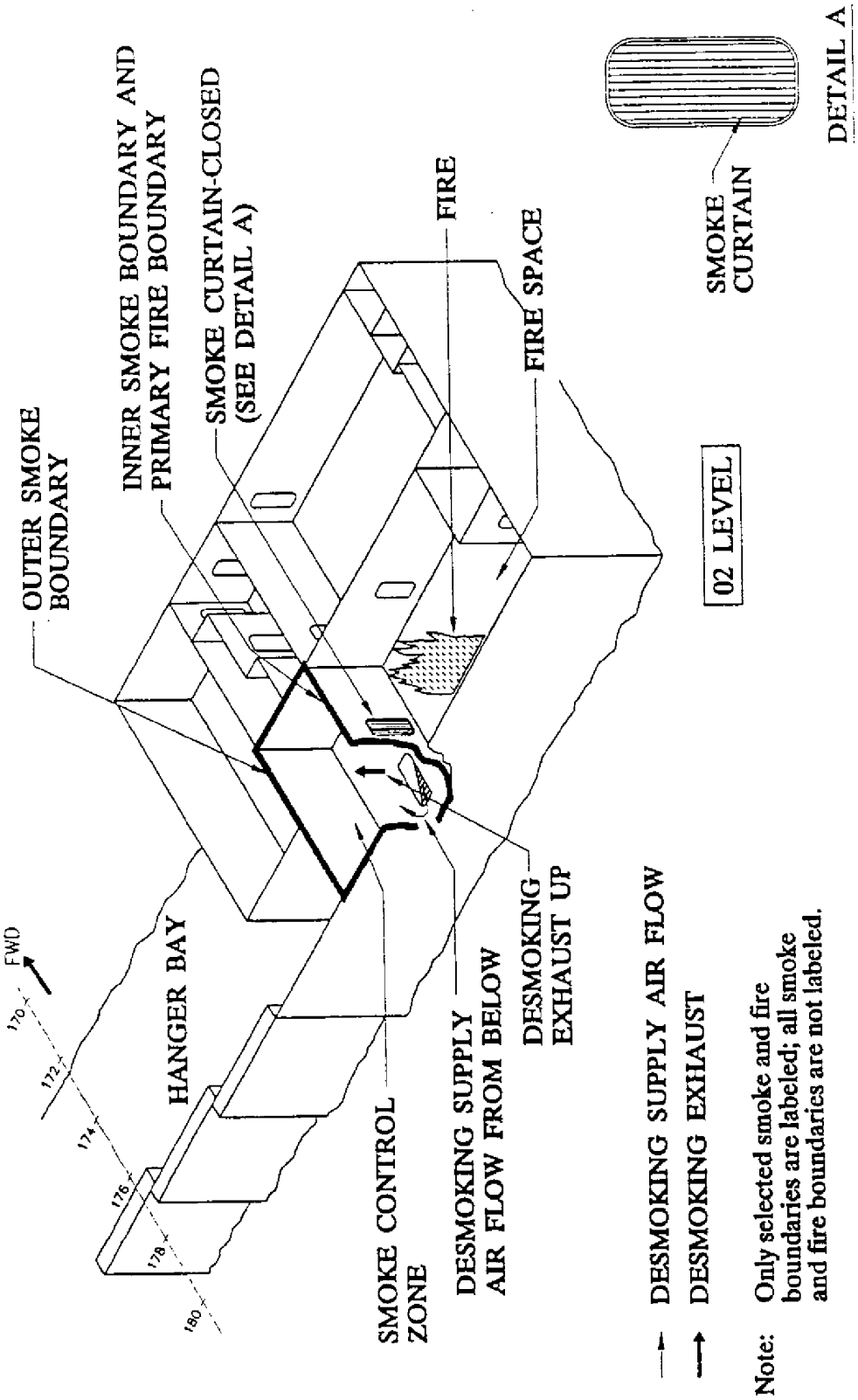

Figure 555-7-11 Active Desmoking for an Aircraft Carrier with the Fire in a Space on the 02 Level Amidships (Sheet 2 of 4)

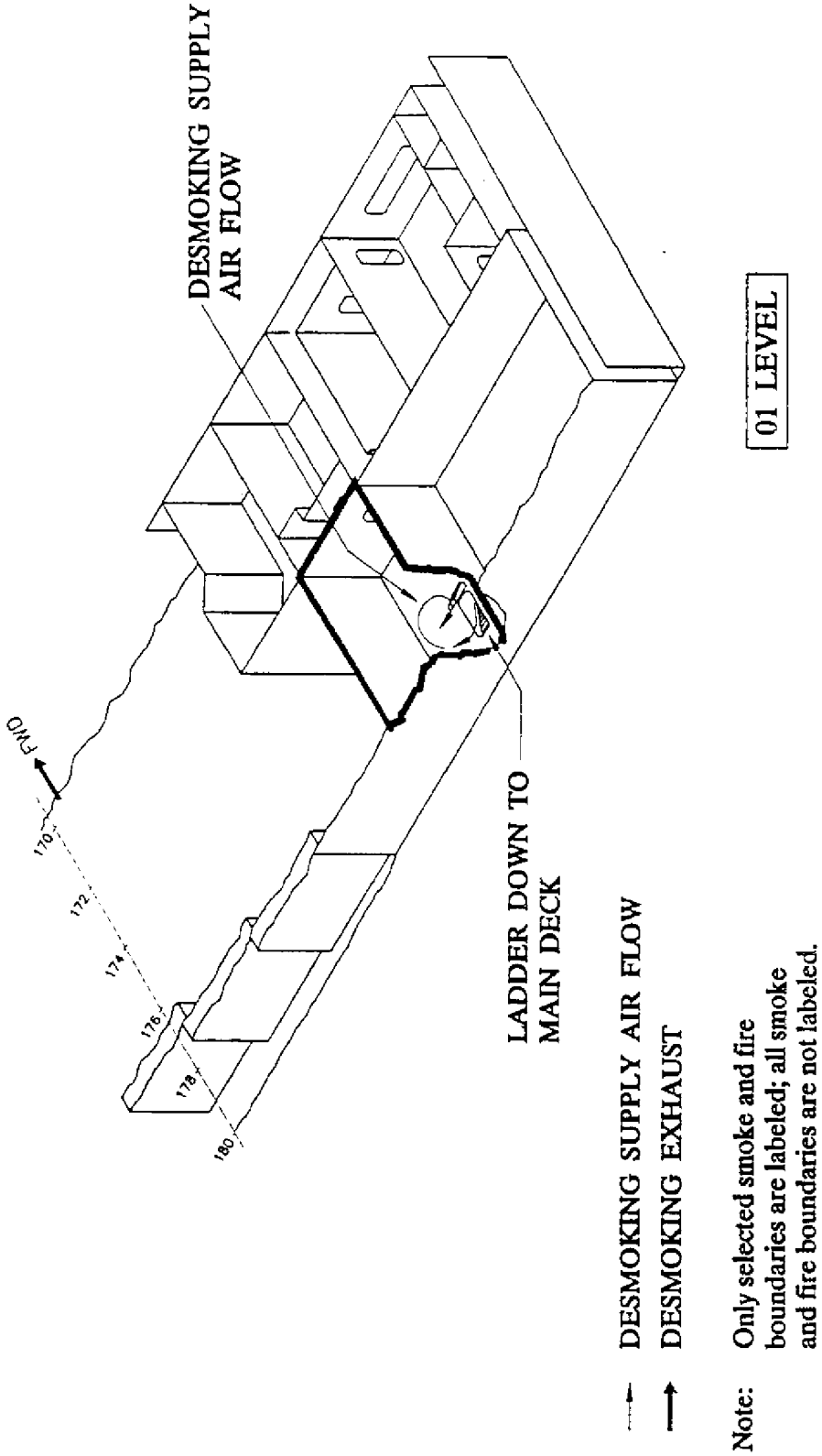

Figure 555-7-11 Active Desmoking for an Aircraft Carrier with the Fire in a Space on the 02 Level Amidships (Sheet 3 of 4)

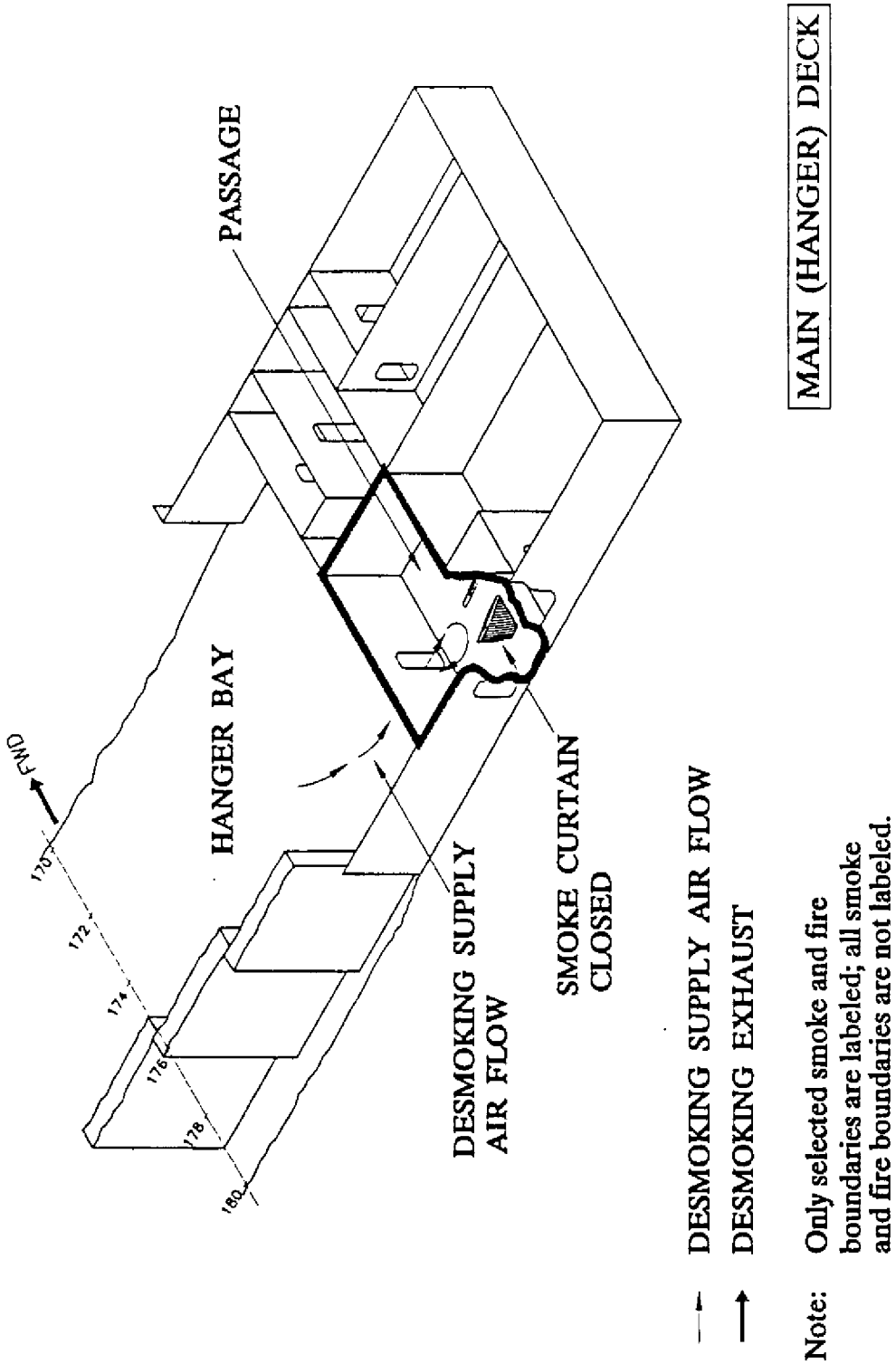

Figure 555-7-11 Active Desmoking for an Aircraft Carrier with the Fire in a Space on the 02 Level Amidships (Sheet 4 of 4)

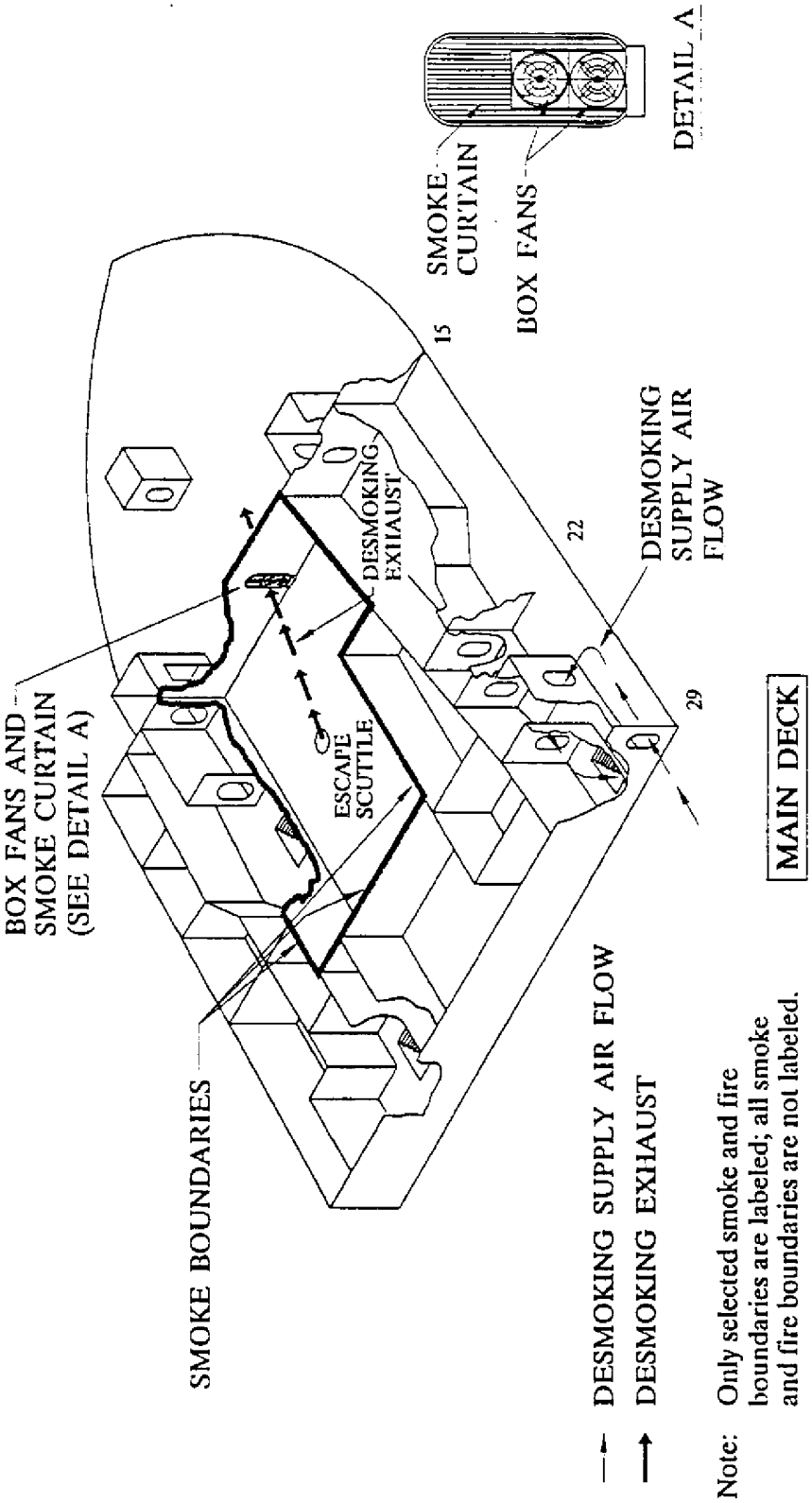

Figure 555-7-12 Active Desmoking for an Amphibious Ship with the Fire in a Space on the Third Deck (Sheet 1 of 3)

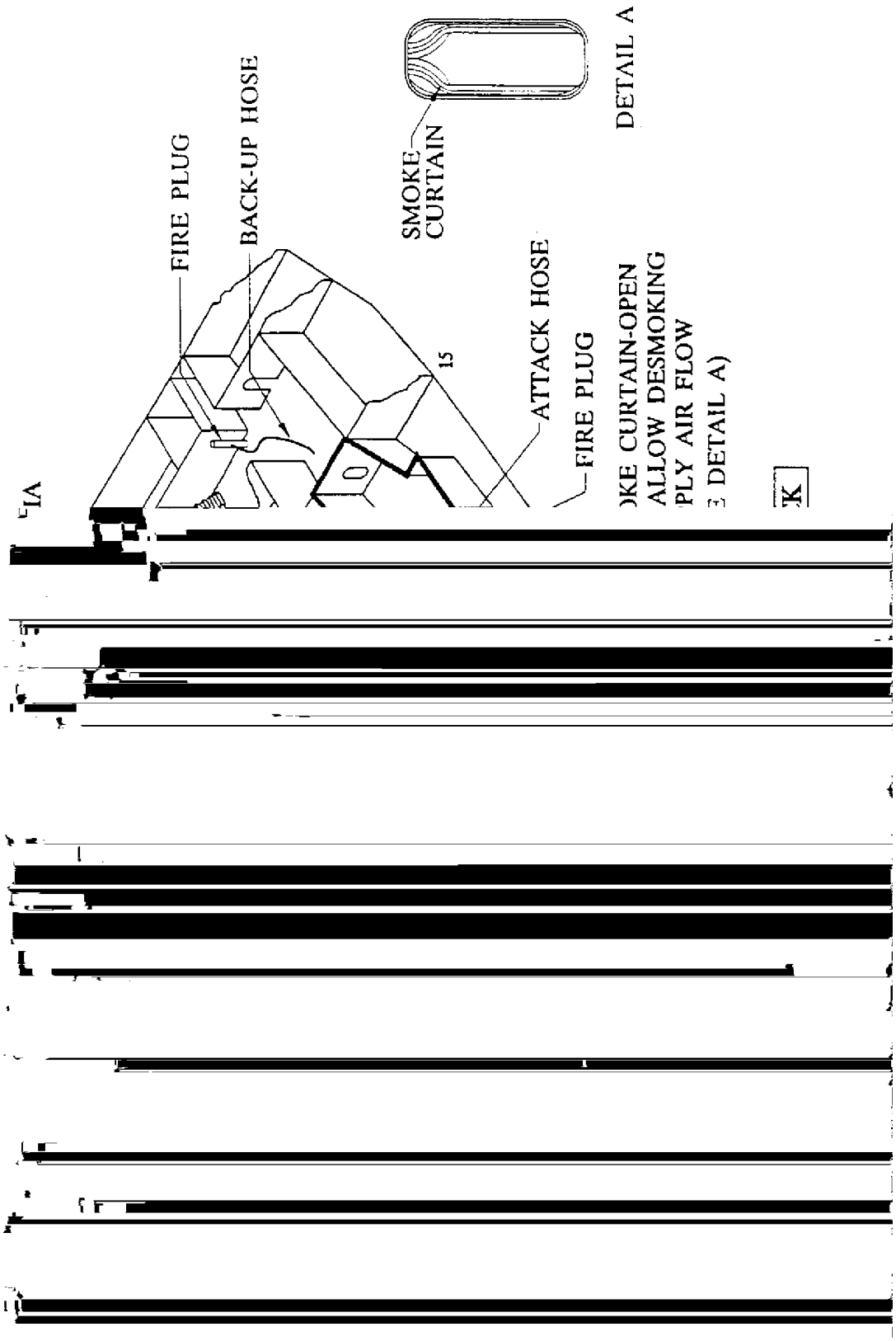

Figure 555-7-12 Active Desmoking for an Amphibious Ship with the Fire in a Space on the Third Deck (Sheet 2 of 3)

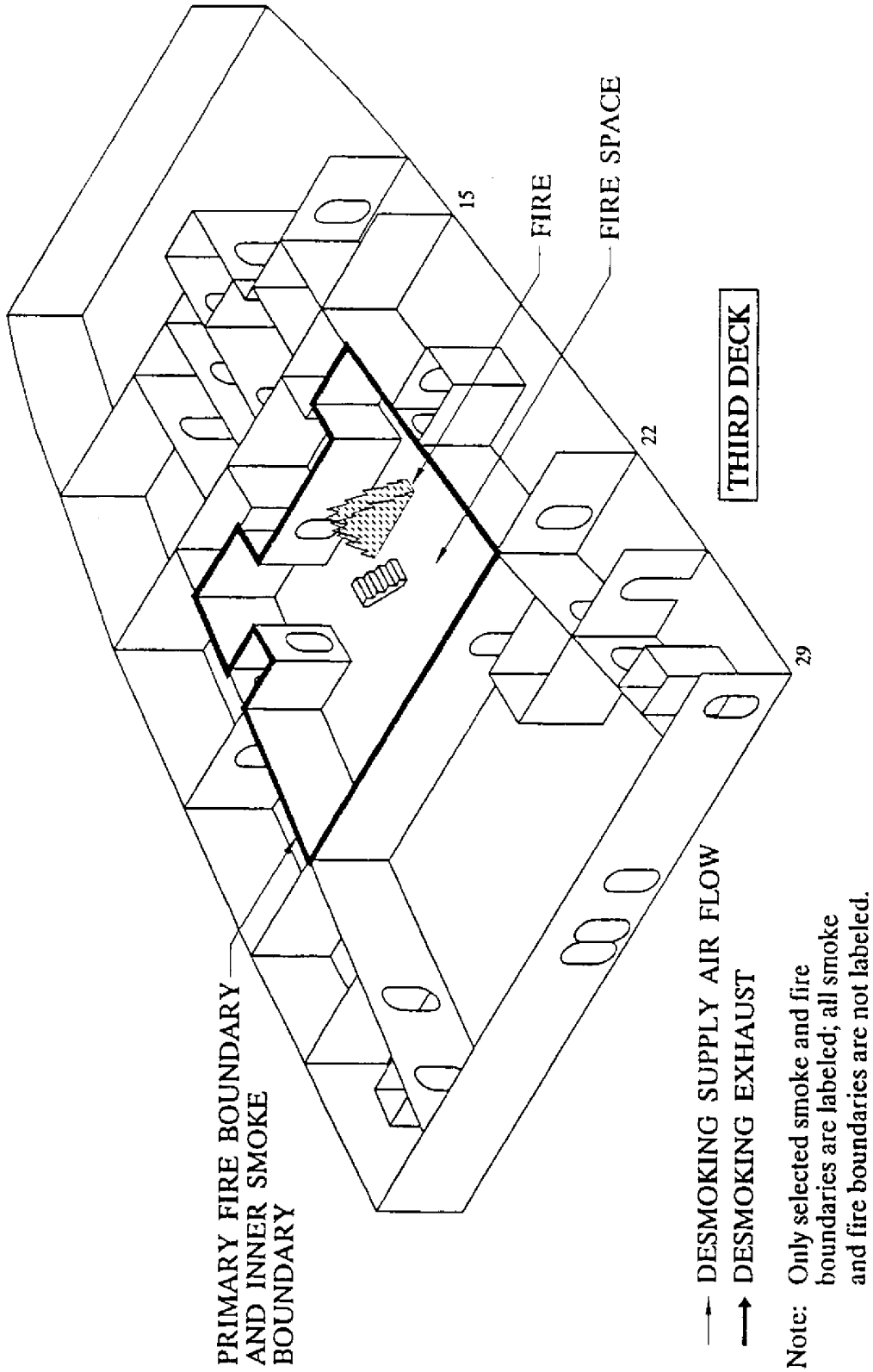

Figure 555-7-12 Active Desmoking for an Amphibious Ship with the Fire in a Space on the Third Deck (Sheet 3 of 3)

555-7.7.5 RIG PORTABLE DESMOKING EQUIPMENT. Desmoking fans or blowers should be rigged at the exhaust weather access to pull smoke and air along the desmoking flow path. Fans or blowers shall not be rigged at the fresh air supply weather access or in the supply desmoking flow path to blow air. This is not effective and increases the risk of spreading smoke to unaffected areas of the ship. Information relating to air handling capacity, power requirements, weight and geometry for desmoking fans and blowers is contained in **NSTM Chapter 079 Volume II** . Normally, two personnel are required to rig portable blowers at the exhaust weather access and set boundaries along the desmoking path. Rig a smoke curtain between the door frame and the fan(s) to prevent circulation around the fan(s); see Figure 555-7-13. When using portable ducting connected to a blower to exhaust smoke, a smoke curtain will not be needed between the blower, or ducting, and the weather access opening. When using electric driven (box) fans, stacking one fan on top of the other (to work in parallel) significantly improves the desmoking performance compared to one fan alone or compared to rigging fans in series. Power for electrically driven fans or blowers should be considered when isolating electric power in the fire area. Similarly, water supply and overboard discharge should be considered for water driven fans or blowers. When the blowers or fans and the smoke curtain around them are rigged, supply power to the fans or blowers and start them.

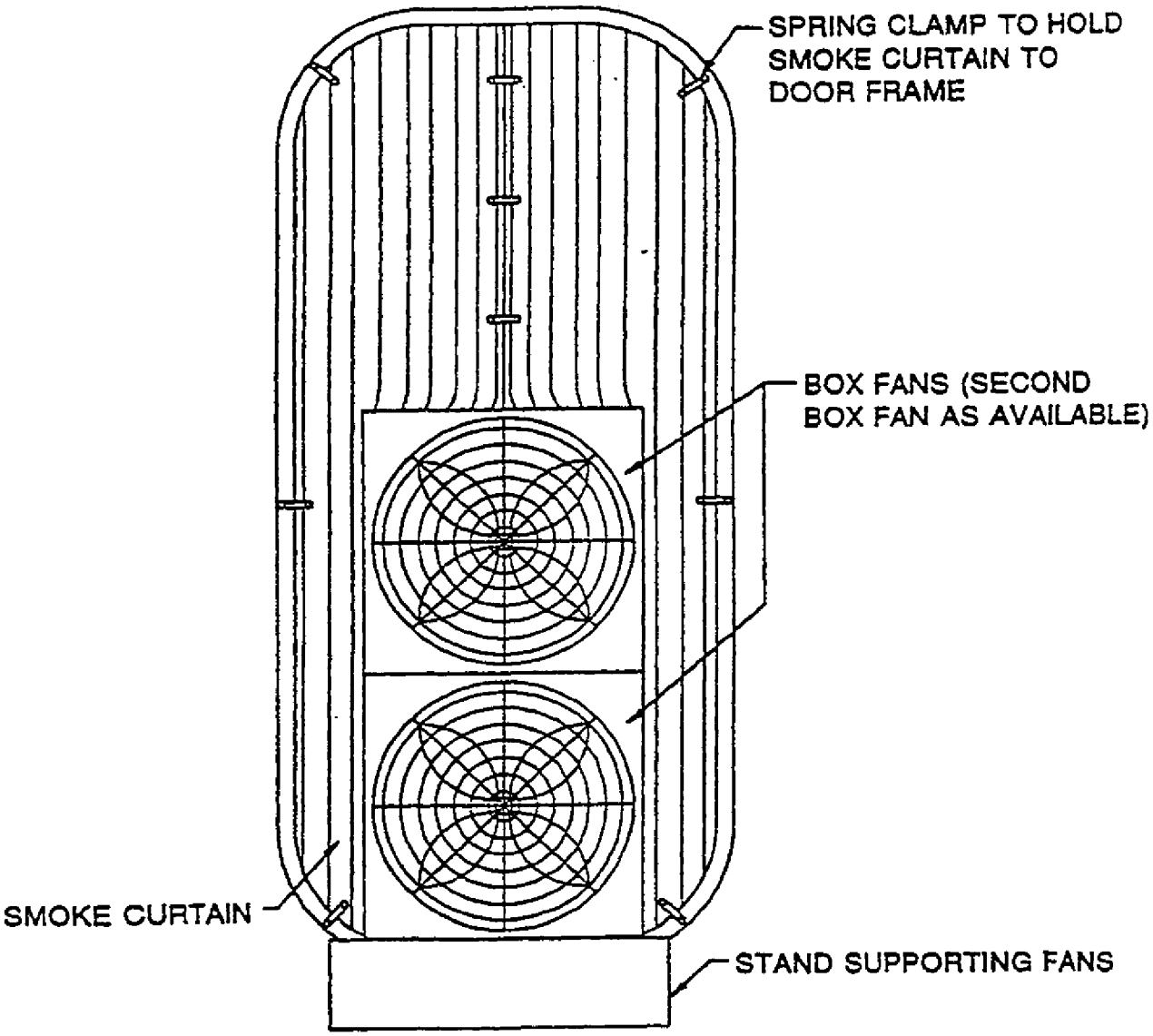

Figure 555-7-13 View Showing Smoke Curtain and Box Fans Located in Door Frame

555-7.7.5.1 Multiple box fans are preferred when rigging with a smoke curtain at the weather exhaust point. Table 555-7-1 compares the relative effectiveness of portable box (tube axial) fans and water-driven fans set to blow out through a ship's weather access with a smoke curtain doorway seal as shown in Figure 555-7-13. Since the actual flow rate will vary for every desmoking configuration, this data is useful only for comparing fan options and not estimating the smoke removal rates.

Table 555-7-1. COMPARISON OF DOORWAY FAN OPTIONS WHEN USED WITH SMOKE CURTAIN SEALS

Fan Configuration	Passageway Air Velocity
Three stacked box fans	275 ft/min
Two stacked box fans	250 ft/min

Table 555-7-1. COMPARISON OF DOORWAY FAN OPTIONS WHEN USED WITH SMOKE CURTAIN SEALS - Continued

Fan Configuration	Passageway Air Velocity
One box fan	150 ft/min
Two stacked water motor fans	125 ft/min
One water motor fan	80 ft/min

555-7.7.5.2 When the space to be desmoked has a direct access to weather, fog streams also may be used to help exhaust smoke. When using a vari-nozzle to desmoke an area, the nozzle should be set to a 60 degree angle fog pattern and positioned approximately three feet inside of the weather access for a pattern covering 85 to 90 percent of the access opening. Because the fog stream is directed to the weather, the amount of water added to the ship is reduced. The fog stream creates a lower pressure are at the weather access. This acts to draw the smoke out of the space. The nozzleman must wear a breathing apparatus since he is immersed in the exhausting smoke.

NOTE

Fans and blowers are preferred over fog streams for desmoking because they do not add water inside the ship and do not require constant manning.

555-7.7.6 ESTABLISH AND MAINTAIN DESMOKING. Open accesses and activate desmoking fans and blowers between the desmoking exhaust flow point and the smoke control zone, starting from the weather exhaust point and working towards the smoke control zone. The access to the fire space should be closed until the attack team is ready to enter. When the access to the fire space is opened, it shall be covered with a smoke curtain to minimize smoke entering the smoke control zone and to minimize fresh air feeding the fire.

555-7.7.6.1 Unrestricted visibility should be restored in the smoke control zone within 5 minutes of when active desmoking is started. Longer desmoking times indicate that the active desmoking may not be benefitting the overall firefighting effort. Longer desmoking times indicate that the volume of the smoke control zone and the active desmoking flow paths is too large for the fans used for active desmoking.

555-7.7.6.2 Air stream efficiency within the smoke control zone will be significantly impaired by obstructions. Fire party members should position themselves to minimize their impact on the moving air stream.

555-7.7.6.3 Monitor the exhaust flow path and ensure accesses along the exhaust flow path are closed. Monitor the exhaust to weather to ensure smoke is being exhausted and not recirculated back into the ship.

555-7.7.6.4 Fans or blowers placed along the exhaust desmoking path may improve performance marginally. However, added risks may occur such as blowing air into the fire space, fans blocking passageways and hindering firefighting access, and pushing smoke out of the exhaust path to unaffected areas of the ship.

555-7.7.6.5 Fans or blowers should not be placed where they might contribute to feeding air to the fire.

555-7.7.6.6 If active desmoking is stopped prior to extinguishing the fire, reset the outer smoke boundary around the smoke control zone.

555-7.8 ATTACKING FROM THE SPACE ABOVE THE FIRE

555-7.8.1 Many interior spaces can be entered only from above, either down an inclined or a vertical ladder. Working on the hot deck in the space over the fire is like standing in a frying pan and presents a severe heat challenge even when wearing the firefighter's ensemble (FFE). Attacking the fire from the same level as the fire space or from below is significantly easier and is preferred. The following should be considered when conducting either a direct attack or an indirect attack from the hot deck over the fire space:

a. Rotate personnel frequently to avoid heat exhaustion. Endurance on the hot deck over the fire may be less than 10 minutes when wearing the FFE.

b. Position the scene leader just outside the access to the space over the fire so that his endurance and judgment are not affected by the high level of heat stress on the deck over the fire space.

c. Wear two pairs of socks in the firemen's boots, if practicable, to improve insulation of the feet.

d. Wear long pants under the firefighter's ensemble and overlap clothing at the ankles to prevent heat and steam from entering the bottom of the FFE coveralls.

e. Staying low, kneeling on the deck, or crouching in the space above fire may expose the firefighter to greater heat stress than standing erect.

f. Avoid stationing personnel at local hot spots such as the deck immediately above the fire.

g. Minimize hose ruptures by cooling the deck with water in the vicinity of the hose and by avoiding laying hose on local hot spots.

555-7.8.2 Opening a hatch for firefighter re-entry is safer than entering through a scuttle in most situations. If escape becomes necessary, escaping through a scuttle could be very difficult.

555-7.8.2.1 To conduct a direct attack from the space above the fire, it will be necessary for firefighters to descend through the hot thermal layer in the overhead of the fire space. Firefighters making such an entry from above must be fully protected in a firefighter's ensemble and should make the decent quickly. Touching hot metal surfaces, such as handrails, should be avoided if possible, particularly in the hot upper region of the fire space. If it is necessary to grab a handrail to enter the fire space, the firefighters glove alone may not provide adequate protection. Using an extra glove or other material as a hot mat may prevent burning hands.

555-7.8.2.2 Once in the fire space, the attack team can conduct a direct attack using standard techniques. In most situations, temperatures in the fire space will be lower near the deck than near the overhead.

555-7.8.3 When opening a hatch for access to the fire space, installing a smoke blanket over the hatch is not recommended for the reasons listed below. The scene leader will decide when a smoke blanket is required.

a. When the hatch is opened, heat and large volumes of smoke and steam enter the space above the fire very quickly, before a smoke blanket can be rigged over the hatch. Rigging a smoke blanket over the hatch will not improve conditions in the short term (period of about 10 minutes or less).

b. The smoke blanket interferes with communication between people in the fire space and people in the space above the fire.

c. The smoke blanket interferes with personnel moving through the access and could cause personnel injury from a fall.

d. If the fire is not completely extinguished, leaving the hatch open without a smoke blanket covering the hatch opening will allow air to enter the fire space, causing the fire to grow. Consequently, conditions in the fire space may deteriorate and additional smoke and heat would enter the space above the fire. However, if the fire is not large and burning vigorously, it would take several minutes for conditions to change significantly.

555-7.8.4 If the attack team evacuates the fire space and leaves the hose, cover the hatch opening with a smoke blanket to limit the supply of air to the fire space and to limit the spread of smoke and heat out of the fire space. If the attack team abandons the fire space, remove the hose and close the hatch.

555-7.9 SEARCH AND RESCUE

555-7.9.1 Successful rescue of trapped personnel requires a systematic approach. The task is difficult and dangerous. Factors to consider when organizing and directing a search are:

a. Searchers should wear breathing apparatus and full protective clothing. A hose line should be available in the immediate area to protect the searchers and their avenues of escape.

b. Searchers should use some method of indicating where they have searched so that other teams will not repeat their efforts. Colored tags or chemlights fastened to doors are two possible methods.

c. It should not be assumed all personnel have been located until the fire is out, the area has been ventilated, and the area has been searched a second time.

d. The NFTI can be used to detect body heat against a cooler background, and is very useful in searches. Searchers should carry spare EEBD's and be trained in their use and how to place and activate an EEBD on personnel overcome by smoke.

555-7.10 FIRE OVERHAUL

555-7.10.1 FINAL EXTINGUISHMENT. Overhaul of a fire is an examination and cleanup operation. It includes finding and extinguishing hidden fire, and determining whether the fire has extended to other parts of the ship. It is usually best to start at the perimeter of the fire and work toward the compartment of fire origin. Check for all possible areas of fire spread, including behind electrical outlets or cables, inside vent ducts, in thermal or acoustic insulation, and in concealed spaces. Clues to concealed fires are smoke creeping out of openings, bulkheads hot to the touch, and results from the NFTI. These clues can be used to trace hidden fire. If necessary, pull down material, bulkhead sheathing, false overheads, etc. to discover and extinguish all remaining fire.

555-7.10.2 POST-FIRE DESMOKING. After a compartment fire is out, combustible gases may be present. For all classes of fire, carbon monoxide will be the predominant gas. Although combustible, substantial quantities of carbon monoxide must be generated to reach the flammable range (12.5% is the lower flammable limit). Heavy carbon monoxide production which does not ignite is typically associated with a confined fire that has smoldered for several hours.

555-7.10.2.1 For a compartment which has experienced a class A or class C fire, after the fire is out (visible open flaming has been extinguished), desmoking to support fire overhaul can proceed with minimal risk. There are no recorded incidents where a post-fire atmosphere involving class A or class C compartment fires has ignited as a result of operating installed ship's ventilation systems.

555-7.10.2.2 If the fire involved class B material, the presence of flammable liquids can create a flammable atmosphere in a post fire environment. Therefore, the procedures for desmoking described in Section 10 (Machinery Space Firefighting Doctrine for class B Fires in Surface Ships) apply, except that lack of positive ventilation, in many instances, will limit available methods for desmoking.

555-7.10.2.3 The goal in desmoking is to replace 95% of the smoke-laden air with fresh air. This will require approximately 4 complete space volume changes in a compartment. This can be achieved with a fully operable ventilation system in 15 minutes for flammable liquid storerooms and issue rooms, machinery rooms, auxiliary machinery rooms, fuel pump rooms, and diesel generator rooms. Ship's ventilation drawings must be consulted in order to calculate minimum ventilation times for other spaces.

555-7.10.3 POST-FIRE ATMOSPHERIC TESTING. The purpose of post-fire atmospheric testing is to certify the atmosphere as safe, which includes safe for breathing without respiratory protection. This guidance is applicable to all classes of fire. Shipboard personnel authorized to conduct post-fire atmospheric testing are Gas Free Engineers and Gas Free Engineering Petty Officers.

WARNING

Atmospheric test personnel shall wear breathing apparatus until testing is completed and the atmosphere is certified as safe.

WARNING

If an unsatisfactory combustible gas reading (at or above 10 percent LEL) is obtained, there is a risk of an explosion. The space shall be immediately evacuated and additional desmoking conducted.

After the fire is out, the fire has been overhauled, and the compartment has been desmoked, a series of tests shall be conducted in the compartment for oxygen, combustible gases, and toxic gases, concurrently or in that order. All spaces should be desmoked before atmospheric testing is started because oxygen analyzers do not operate reliably if the sensor is exposed to excessive moisture or is in contact with post-fire atmospheric particulates. Also, combustible gas analyzers will not operate reliably in a Halon atmosphere or oxygen deficient atmospheres; therefore an acceptable oxygen concentration is required before the combustible gas measurement can be considered for acceptance. If a particular location fails a test, only that location must be retested for the failed test. Additional ventilation and retesting is required only if initial test results are unsatisfactory. Where flammable liquid fires have been extinguished, tests for toxic gases shall be in accordance with Section 555-10.3.11. For a satisfactory test series:

a. Oxygen concentrations shall be between 19.5 to 22 percent, as referenced in **NSTM Chapter 074, Volume 3, Gas Free Engineering** .

b. Combustible gas concentrations shall be less than 10 percent of the lower explosive limit (LEL).

c. Toxic gas concentrations shall be below the safe exposure limits specified in **NSTM Chapter 074, Volume 3** , Appendix B. For a class A or C fire, the toxic gas series shall include carbon monoxide (CO) and carbon dioxide (CO_2). The toxic gas series shall include hydrogen chloride (HCl) and hydrogen cyanide (HCN) when

material which produce these gases have been involved in the fire. For a class B fire, an additional toxic gas test for hydrocarbons is required. Hydrogen chloride is produced when polyvinyl chloride electric cable jacketing is burned. Hydrogen cyanide is produced when vinyl nitrile rubber chilled water piping insulation is burned. Other toxic gases should be tested for when their presence is suspected. Hydrogen fluoride results from decomposition of Halon 1301. If the space may have been contaminated by CBR agents, testing for CBR contamination should be conducted in accordance with **NSTM Chapter 470** and NWP 3-20.31. See **NSTM Chapter 470** and NWP 3-20.31 for decontamination methods if the space has been exposed to CBR contamination.

WARNING

When more than one toxic gas is present, the cumulative effects of the gases may be hazardous even though the concentration of each gas is below the exposure limit. SeeNSTM 074 Volume 3, Gas Free Engineering , paragraph 074-19.11, for information on evaluating cumulative toxic gas effects.

Instruments used shall be approved by the National Institute of Safety and Health, Mine Safety Health Administrations, or have been approved in the NSTM.

555-7.10.3.1 Locations for Atmospheric Testing. Test locations are determined by the Gas Free Engineer, or GFE Petty Officer, based on conditions. The following guidance is provided to aid in determining the appropriate locations. However, additional test locations may be needed depending on specific conditions. This guidance does not replace the good judgment of the knowledgeable test personnel.

555-7.10.3.1.1 General. During a fire, combustible or toxic gases spread with smoke and heat. Fire gases initially rise due to their buoyancy from being hotter than surrounding air. However, as fire gases cool and mix with surrounding air, particularly outside the fire space, they spread through the ship with normal air currents. Generally, atmospheric testing should be conducted in the fire space and at locations high, center, and low in the affected water-tight compartment since some gases are lighter or heavier than air and may accumulate high or low. The rate of ventilation air-changes will vary for different ship locations. Extra ventilation and testing may be required for locations or spaces which have a low ventilation rate as they may maintain hazardous concentrations of flammable or toxic gases. Residual light smoke is a sign of a poorly ventilated location and indicates the need for additional ventilation and testing.

555-7.10.3.1.2 Small fires. When a small fire (such as a waste can or localized electrical fire) is extinguished quickly, there is little fire damage and light smoke which does not spread beyond the fire space. In this case, the spread of toxic gases is probably minimal. Therefore, a single test series at one location in the fire space may be adequate and overboard desmoking may not be necessary. The need for testing will require judgement by the Gas Free Engineer or GFE Petty Officer.

555-7.10.3.1.3 Growing fires. In the event of a growing fire where smoke spreads beyond the original fire space, a single test location is not sufficient even when the ventilation system remains undamaged. After desmoking, an atmospheric test series should be conducted in at least one location in fire space (e.g. fire area) and at locations

high, center, and low in the water-tight compartment. At least one test series should be conducted on each level. This would result in four test locations in a three-level compartment. Additional locations should be tested where poor ventilation and gas accumulation is suspected.

555-7.10.3.1.4 Large fires. When a large fire damages the ventilation system or extensive partially-burnt material remains, including the result of a class B fire, extensive post-fire atmospheric testing will probably be required. A damaged ventilation system will result in poorer air replacement and a greater likelihood of local pockets of smoke and gases. Large surfaces of partially-burnt material or unburnt flammable liquids will result in continued formation of hazardous gases and vapors after the fire. Locations for atmospheric testing should include the four corners and center of each level. In areas where low ventilation and gas accumulation are suspected, additional ventilation and testing should be conducted.

555-7.10.4 DEWATER. In determining the number of hose lines to be used, the firefighter should be guided by the extent and intensity of the fire. Every gallon of water released in a ship reduces her stability and freeboard and increases the ship's list until pumped out. Dewatering may be required simultaneously with firefighting. Refer to **NSTM Chapter 079** , Volume II, for methods to use when dewatering. Refer to **NSTM Chapter 470** and NWP 3-20.31 for guidance on handling water that may be contaminated by CBR agents.

555-7.10.5 POST-FIRE INVESTIGATION. After overhaul, the fire should be investigated to determine the point of origin, combustibles involved, path of fire spread, ignition source, and significant events in the growth and eventual extinguishment of the fire. Starting from the point of farthest fire spread, burn patterns will usually extend back to the area of origin. Efforts should be directed toward recreating the conditions that caused the fire, and identifying any changes in design or procedures that could have prevented the fire or lessened its spread and intensity. These changes are very helpful to ship designers and operators. Photographs, material samples, metallurgical samples, and failed equipment assist in reconstructing a fire history. If there is a major fire which involves significant damage or loss of life, a NAVSEA technical expertise team is available to investigate fires to develop lessons learned from a ship design and a material standpoint.

555-7.11 ADDITIONAL CONSIDERATIONS FOR LARGE FIRES

555-7.11.1 Large fires require overall coordination which can not be developed from routine drills. Because multiple damage control repair stations will be involved, central control is essential. Multiple attacks on a fire can lead to situations where one manned hose forces heat and flames onto another. Therefore, each manned hose should be assigned clear responsibilities which avoid this danger. In the event of a major fire, all propulsion fuel, aviation fuel, and cargo transfer pumping operations that do not affect critical functions or ship safety, shall be secured. Before aircraft fueling operations are resumed, the Air Officer, Aviation Fuels Bos'n and DCA shall verify that fuel pumping operations can safely be resumed. With a large fire, fire boundaries must be established so that firefighters can work inward from safe havens. In almost all cases, this is a difficult task. Once a fire has spread beyond the compartment of origin, the compartments between the safe boundaries and the fire will become so hot and smokey that entry will not be possible. Heroic entries may be attempted, but key emphasis must be placed on keeping vertical and horizontal boundaries cool and secure. Venting a fire can aid in firefighting reentry. Care must be taken when venting fires to ensure safety to the ship and firefighters. If the vent path will expose a protected area of the ship to CBR contamination, the potential for and consequences of allowing CBR contamination into that protected area should be considered. Where feasible, large holes should be cut in weather decks above hot compartments for the purpose of releasing heat and smoke trapped inside the ship. The absolute minimum size for a ventilation opening is one square foot; large holes approximately 3 feet by 3 feet shall be made whenever possible for significantly more effective ventilation. When trapped smoke and heated gases have escaped, the resultant temperature reduction and smoke removal permits attack teams to advance horizontally

toward the fire. Hose streams should not be directed down through vent holes because they disrupt the upward movement of smoke and gases, thus defeating the ventilation action, endangering crews advancing into the space, and pushing the fire and smoke into adjacent spaces. Figure 555-7-2 shows the preferred method for attacking a fire directly, when heat does not deny access to the space.

555-7.11.2 When the compartment has cooled, attack teams can enter through normal accesses and advance to the seat of the fire. The purpose of venting a fire from above to the weather is to remove trapped heat and smoke safely from the ship and thus aid in firefighting reentry. When vented hot gases contact air, intense flaming at the vent hole will likely result. Precautions when cutting a vent hole include standing clear of the vent opening, wearing personal protective clothing and equipment and having a charged hose line to protect exposures. Figure 555-7-6, and Figure 555-7-7 describe the options when extreme heat denies access. Unexpected or cascading casualties almost always accompany large fires. The fire must be prevented from leapfrogging past a manned hose via vent ducts or cableways, thereby starting another casualty in a supposedly secured area. Firefighters must be prepared to rig jumpers around damaged portions of the firemain or electrical systems. Large fires or a damaged firemain may require long hose lengths to reach the fire. However, a 1-1/2 inch hose with a length longer than 200 feet has a severe pressure loss (25 psi per 100 ft, with a flow of 95 gpm) and is not desirable. A portable fire hose station can be established at a staging area near the fire by running lengths of 2-1/2 inch hose from a 2-1/2 inch fire hose station with a 2-1/2 by 1-1/2 inch gated way at the end. This approach can be used when it is not possible to reach a fire from more than one fire hose station. One or two 1-1/2 inch attack lines are then run from the portable fire hose station (gated way). For destroyers or larger ships, the gated way is already available at most interior fireplugs. The friction loss in a 2-1/2 inch hose is only 2 lbs/sq. in. per 100 feet when supplying one 1-1/2 inch hose (at 96 gpm), or 8 lbs/sq. in. per 100 feet when supplying two 1-1/2 inch hoses (at 180 gpm).

555-7.12 ADDITIONAL CONSIDERATIONS FOR COLD WEATHER

555-7.12.1 Cold weather firefighting will only be effective with thorough preparation. All exposed hose reels must be completely drained. If water remains in the bottom of each hose coil, it will freeze and block the hose. Typically, exposed hose reels will be on the flight deck, VERTREP areas, hangar decks, and refueling areas. Indeck washdown countermeasure nozzles must be blown dry, or maintained ice free. These nozzles flow AFFF on flight decks and if clogged with ice will prevent the discharge of AFFF. Exposed firefighting equipment needs to be checked for ready access. A spanner wrench covered in ice, or hose threads filled with ice will be useless in an emergency. Equipment to be checked includes equipment stored near fire hose stations, portable extinguishers, AFFF hose reel mechanisms, breathing apparatus stored in topside damage control repair stations, diesel fuel for P-100 pumps, and the international shore connection for firemain service. Slush may accumulate in fire pump sea chests, which will cause loss of flow and possible pump damage due to cavitation. The problem can be relieved by running multiple pumps in parallel, thus slowing down the water velocity at the individual pump suctions, and by making arrangements to periodically blow down the sea chests.

555-7.13 ADDITIONAL CONSIDERATIONS FOR SHIPS WITH COLLECTIVE PROTECTION SYSTEMS WHEN A CBR THREAT EXISTS

555-7.13.1 GENERAL. This section briefly describes the Collective Protection System (CPS) and the Biological Warfare/Chemical Warfare (BW/CW) scenario upon which this firefighting doctrine is based. Subsections address CBR Boundaries, Ventilation, and Smoke Control. Detailed guidance on evaluating the BW/CW threat and on appropriate protective measures is included in **NSTM Chapter 47 0, Shipboard BW/CW Defense and Countermeasures** ; such guidance is not repeated here. This chapter addresses only those aspects of BW/CW defense that are unique to the firefighting environment.

555-7.13.1.1 Although the guidance in this section is intended for ships equipped with a CPS, the concepts presented in this section may be applicable to some ships without CPS in some situations.

555-7.13.1.2 The scenario involving both a chemical agent and fire that is considered most likely to occur is a direct hit by a penetrating weapon carrying a liquid chemical agent. The fire would be caused either by the warhead or by unexpended fuel in the weapon. Biological agents are considered unlikely in such a scenario because the agents probably would be destroyed by the fire. Similarly, vapor agents would be made ineffective by the fire. The occurrence of a self-inflicted fire while operating in a BW/CW threat environment is considered so unlikely that such a scenario was not used as the basis for firefighting doctrine. Nevertheless, the guidance below would apply to such an event.

555-7.13.1.3 Since different chemical agents may behave differently in a fire environment, the following general description of the chemical agent fire environment is only approximate and may not apply to a specific agent. The heat from the fire would cause a liquid agent to vaporize rapidly, resulting in a possibly severe vapor and aerosol threat in surrounding areas. Liquid agent may be present on surfaces exposed to the weapon effects. The chemical agent threat in the immediate vicinity of the fire would decrease (compared to non-fire conditions) due to the initial high temperature, but the toxic decomposition products and residual agent would still pose a personnel hazard.

555-7.13.1.4 Consequently, assembly areas and approach paths used by firefighters may be exposed to a vapor chemical agent or a liquid chemical agent. The liquid agent contamination is more likely to occur in areas exposed to the direct effects of the warhead, with liquid persisting on cooler surfaces of the affected compartment; that is, areas low in the compartment that generally are the preferred approach path for attacking the fire.

555-7.13.1.5 The Collective Protection System (CPS) provides zones that are protected from Chemical, Biological and Radiological (CBR) agents so that personnel can receive medical attention, attend to personal needs or perform their duties in a CBR threat environment without having to wear personnel protective equipment (MCU-2/P protective masks and/or CBR protective overgarments). The zones are called ″CPS zones″ or ″pressure zones.″ Within a ″total protection zone″, the CPS supply and exhaust ventilation are designed to pressurize the zone to 2 inches water gage and the supply air is filtered to remove all CBR contaminants. Under most conditions, personnel protective equipment need not be worn in a total protection zone. Generally, large machinery spaces in CPS-equipped ships are ″limited protection zones″ that are maintained at atmospheric pressure with the supply air filtered to remove only liquid or solid contaminants. For many conditions in a CBR threat environment, only an MCU-2/P protective mask is needed to provide protection while in a limited protection zone. **NSTM Chapter 470** and NWP 3-20.31 provide in depth guidance on the appropriate personnel protection for various CBR threat conditions.

555-7.13.1.6 Access to pressure zones is provided through air locks to maintain system pressure. Decontamination stations are provided with access from the weather into total protection zones. **NSTM Chapters 470 and 510** provide additional information on the description and operation of the CPS. The following paragraphs provide guidance on those aspects of firefighting that are unique to CPS-equipped ships. See **Section 10** for doctrine for fighting fires in machinery spaces in CPS-equipped ships.

555-7.13.2 CBR BOUNDARIES. A CBR boundary isolates areas of the ship that are protected from CBR contamination from the weather or from other areas of the ship that may be contaminated. On CPS-equipped ships, the weather shell of the ship and each boundary between CPS zones is a CBR boundary. If a fire occurs while a CBR threat exists and a CBR boundary is breached (potentially allowing CBR contamination to cross the boundary), the ship may decide to take any of the following courses of action:

a. Re-establish CBR boundaries and CBR protection in zones that were protected previously and are undamaged. The zone containing the fire may remain unprotected.

b. Operate with the potential for CBR contamination in affected zones until either the fire is extinguished or the CBR threat no longer exists. Personnel would wear the appropriate CBR protective equipment.

555-7.13.2.1 A CBR boundary can be breached during a fire by evacuation actions, firefighting actions, the fire itself, a weapon hit or some other means. If a CBR boundary is breached when a CBR threat exists, it should be assumed that contamination has spread across the boundary. For example, evacuating a machinery space may breach the boundary between the limited protection machinery space and the surrounding total protection zone resulting in possible vapor contamination of total protection zones in which accesses to the machinery space are located. When such a situation occurs, the response should be:

- First, personnel in the affected zones don CBR protective gear appropriate to the threat.

- Second, fight the fire, set fire and smoke boundaries, isolate the affected area, etc.

- Third, evaluate the situation with respect to the CBR threat as well as the fire.

- Fourth, if considered necessary, re-establish CBR boundaries around the fire-affected zone. When protected zones are determined to be clear, personnel in protected zones may return to the mission oriented protective posture (MOPP) level appropriate for protected areas and the CBR threat level.

555-7.13.2.2 **NSTM Chapter 470** and NWP 3-20.31 discuss the factors to consider in determining the level of personal CBR protection appropriate to the situation. The same factors (heat stress due to wearing full CBR protective gear, reduced operational effectiveness while wearing protective gear, the risk of CBR casualties, etc.) apply in determining the need for re-establishing pressure zone boundaries.

555-7.13.2.3 Since the smoke boundaries need not be as tight or secure as the CBR boundary, generally smoke boundaries would be inside the CBR boundaries. Smoke curtains are not effective as a CBR boundary.

555-7.13.3 VENTILATION SYSTEMS. Typically, ventilation is left running during the initial attack on the fire with portable extinguishers. The maximum rate of air change promotes the maximum tenability which is important for evacuating personnel and for the initial, unprotected firefighters. The Damage Control Assistant should make an early evaluation of the factors listed below and make a decision on securing the supply and exhaust ventilation. If the ship is in a CBR environment and the zone boundaries or CPS systems have not been damaged, continued operation of ventilation is necessary to ensure CBR protection in the protected zones.

a. Continued operation will provide replenishment air to manned spaces in the CPS zone.

b. Securing supply ventilation may not have an immediate effect on the intensity of the fire. However, if the affected space is relatively tight, the intensity of the fire may diminish, or the fire may be prevented from becoming more intense, once the concentration of oxygen in the space is reduced by the fire. Supplying air to the fire, through the ventilation system or open accesses, may allow the fire to grow to the maximum intensity that it could achieve.

555-7.13.3.1 Ventilation recirculating systems serving the fire area or the area not protected from CBR contamination should be secured.

555-7.13.3.2 Ventilation supply and exhaust fans serving only the area not protected from CBR contamination should be secured so that they do not contribute to the spread of contamination.

555-7.13.3.3 To minimize the chances of contaminating the protected area and so that the air flow in the air lock moves from the clear side to the contaminated side of the air lock, the side of the pressure zone boundary exposed to contamination should be maintained at a lower air pressure than the protected areas. Securing ventilation supply air to the zone exposed to contamination while maintaining normal supply and exhaust ventilation to the protected zones should establish the desired air flow through air locks.

555-7.13.4 SMOKE CONTROL. Smoke control methods in CPS-equipped ships are generally the same as in non-CPS-equipped ships (see paragraph 555-7.2.7). If feasible, the ship should be maneuvered to prevent ingestion of smoke into the ventilation supply CBR filters. Smoke will clog the filters and replacement of the filters will be required.

555-7.14 TYPICAL DIFFICULTIES IN FIREFIGHTING

555-7.14.1 DAMAGED FIRE PUMP MOTOR CONTROLLERS. Fire may destroy remote control circuits for electric fire pumps. For most fire pump controllers in the Fleet, a loss of remote control circuitry renders local start pushbuttons inoperative. In such cases, the controller panel must be opened and an electrician must temporarily bypass affected circuits with jumpers. The following emergency starting procedure should be used for emergency contingency training. The procedure recommended for emergency start up of a pump, and bypassing external control circuits which may be energized or shorted, is to remove the control circuit fuses and then the leads to the controller's ″M″ coil. Next connect the coil directly to the line: L1 to one side of the coil and L2 to the other side of the coil. Note: Some size 5 fire pump controllers utilize rectifiers and a DC operated ″M″ coil. In these instances it is necessary to jumper in the rectifier circuit as well as the ″M″ coil. Jumpers with spade type terminations should be used to insure a connection that will not drop off under shock and vibration.

555-7.14.2 FIREFIGHTER FATIQUE. Extended firefighting activity stresses a firefighter physically and mentally. Nozzlemen and others in the fire area may have to be relieved frequently. An exhausted firefighter is a danger to his shipmates as well as to himself. In training exercises, heat stress must be considered. Personnel should not be fully outfitted in firefighters ensembles and breathing apparatus for periods longer than about 30 minutes before being relieved.

555-7.14.3 RUPTURED FIREMAIN. Loss of firemain pressure and flooded compartments result from a ruptured firemain. The crew must isolate the damaged portions, then restore pressure to the intact system. In some cases, realignment of segregation valves may be sufficient. In other cases, it may become necessary to rig a temporary jumper between fire hose stations or special jumper flanged connections to bypass a damaged section of fire main.

1. The procedure is as follows:
   a When directed, secure the isolation valves at either end of the rupture.
   b Remove the wye gates from the required fireplugs, then attach 2-1/2 inch hose to each fireplug, and connect the two lengths of hose using a 2-1/2 inch double female coupling.
   c When directed, open the fireplugs.
2. If fire hose stations are not conveniently located for rigging jumpers, firemain service can be restored by rigging jumpers between firemain flanges using the following procedure:

a When directed, secure the appropriate isolation valves nearest the rupture to isolate the break.

b Remove the ruptured section of fire main at the flanged joints. Bolt on adapters at the flanges, one male and one female, and connect a length of 2-1/2 inch hose.

c When directed reopen the isolation valves.

3. A shortcoming of the above techniques is that both sending and receiving fire hose stations are no longer available for supplying local attack fire hoses. This can be overcome by attaching a trigate at the fire hose station. A 2-1/2 by 2-1/2 by 1-1/2 by 1-1/2 trigate, NSN 9C-4219-01-038-6001, is aboard nearly all ships as part of an accessory kit for P-100 pumps.

4. On many ships, the firemain supplies cooling water to vital combat systems. The DCA, Engineer Officer, and Engineering Officer of the Watch must be alert to shifts in equipment operation or jumper cooling water to maintain a ship's combat systems in operation.

5. Flow through a single 2-1/2 inch hose is limited to approximately 400 gpm due to friction loss (see paragraph 555-4.7.2). When greater flows are required, multiple hoses will be needed. For ships with 2-1/2 inch shore connections, these shore connections may be used to rig jumper hoses.

555-7.14.4 EXTREME HEAT. The heat released by a fire will raise the temperature of a compartment unless the heat is removed. Even protected firefighters will be driven from the ovenlike temperatures common to fires in enclosed spaces. As flammable materials are heated, they pyrolize or give off combustible gases. When the self-ignition temperature of these gases is reached, the entire compartment quickly becomes engulfed in flame. This condition is known as flashover. The firefighter can use several techniques to remove heat. Cutting a hole leading to the weather, at least one foot square, allows the hot air to escape. For best results, this hole should be in the uppermost portion of a compartment. A fire may burn its own hole through aluminum; bombs and missiles create their own vent paths. A continuous thin film of water running across a deck or down a vertical bulkhead will carry away virtually all the heat conducted through the metal. A water spray introduced into a fire space will also cool the compartment effectively. See paragraph 555-7.5.3 for cautions on steam production. Overhead sprinklers, if installed, are ideal for cooling.

555-7.14.5 COMMUNICATION. Members of the fire party give information to each other by normal voice communications. Voice amplifiers, if available, are provided to 10 personnel in the fire party. The scene leader uses ship's phone, soundpowered phone or wirefree radio communication (WIFCOM) to pass information to the repair party leader. The limitations of radio equipment used in fighting major fires must be realized and accounted for. When brought to the scene, the radio should be carried in a pocket in the firefighter's ensemble to protect it from high heat which will, in time, heat the unit causing a frequency shift. The WIFCOM radio will normally return to normal operation when cooled. For DC WIFCOM information, see technical manual NAVSEA EE100-BU-GYD-010, **Operation Instructions and Organizational Level Maintenance - Damage Control Wirefree Communications System** . Attack team leader shall establish communications with scene leader using best available means.

555-7.14.5.1 In a severe environment, attack team members will be able to focus only on breathing, survival and the immediate task before them. While attacking a severe fire or working under stress, the attack team leader may not use WIFCOM or other means of communication effectively. Under severe conditions, the scene leader must initiate actions as necessary without depending on communication from the attack team. If the scene leader needs information about the attack, he should send a messenger to the attack team.

555-7.14.5.2 On the other hand, communicating via WIFCOM is very useful for boundarymen, investigators and the desmoking team. Communication via WIFCOM is useful to the attack team while they are proceeding thorough low-threat spaces, prior to reaching severe conditions close to the seat of the fire.

a. Communication between Damage Control Central, Damage Control Repair Stations, scene leaders, and nozzlemen is often disrupted. Where installed communication is taken out of service due to fire or enemy action, messengers or circuit X40J should be used. Some fleet ships have commercial portable walkie talkie units which can be used during an emergency.

b. A voice amplifier is a device which attaches to a firefighter's breathing apparatus mask and projects his voice, therefore allowing him to communicate easier with other personnel. Without a voice amplifier, a firefighter wearing a breathing apparatus must shout loudly in order to be heard through his face mask. Voice amplifiers should be provided to at least 10 members of the fire party. These 10 should include:

The scene leader	(1)
The attack team leader	(1)
Attack nozzleman #1	(1)
Attack nozzleman #2	(1)
Hoseman #1	(1)
Hoseman #2	(1)
The two investigators	(2)
A messenger	(1) (when required to wear breathing apparatus)
An electrician	(1)

555-7.14.6 VERTICAL TRUNKS. Hose advancement within and from a vertical trunk is an extremely hazardous operation. There is a risk of falling, which is compounded when wearing firefighting personnel protection. Safety lines may be needed to reduce this risk. There is also a risk of fire extending into the trunk. Additional manning is required to maintain a hoseman at the top and the bottom of the vertical trunk. Prior to entering the trunk, the scene leader will direct the setting of smoke boundaries at the top of the trunk and the rigging of two charged hoses to the trunk access.

555-7.14.6.1 Due to the limited space available in a vertical trunk, single hose operation is normally more effective than a two hose configuration. The primary attack hose is advanced down the trunk while the secondary attack hose is positioned at the top of the trunk to augment the primary attack hose as necessary. If a second hose is required at the fire, it is advanced separately down the vertical trunk using the same procedures as the first.

555-7.14.6.2 For advancing a hose down the vertical trunk, the nozzleman descends with the topside hoseman lowering the hose at the nozzleman's descent pace. By descending with the hose, the nozzleman can guide the nozzle through any scuttles and away from obstructions. Particular attention is needed to ensure that the bail handle is not opened by obstructions during the lowering. As appropriate along the way, the nozzleman can grasp the hose and exert a tug to signal continued lowering. The nozzleman should not make any attempt to operate the nozzle from the vertical ladder or to carry hose. He should only occasionally grasp the hose with one hand to guide the nozzle or exert a tug as a signal.

555-7.14.6.3 The hoseman and attack team leader (NFTI operator) should follow closely after the nozzleman and position themselves at the bottom of the trunk for space entry. Three men wearing ensembles and breathing apparatus is the practical limit for staging in a standard four foot by four foot trunk. A hoseman is also maintained at the top of the trunk to assist in hose handling. A smoke curtain should be placed in the trunk at the access into the space to provide additional protection to personnel in the trunk and maintain trunk tenability. The attack team leader decides on whether to keep the smoke curtain open or closed depending on fire conditions. To access the space, the hoseman acts as accessman. For self-closing doors, a holding device should be available to secure the

door in the open position. For self-closing counter-balanced joiner doors normally provided for emergency escape trunks, an extra wide smoke curtain may need to be fabricated using two standard smoke curtains to account for door protrusion into the trunk.

555-7.14.6.4 A hoseman is maintained at the bottom of the trunk to assist in hose handling, pass communications, and maintain the smoke curtain, if deployed. When this hoseman enters the space, another hoseman shall be positioned at the bottom of the trunk (see Figure 555-7-14).

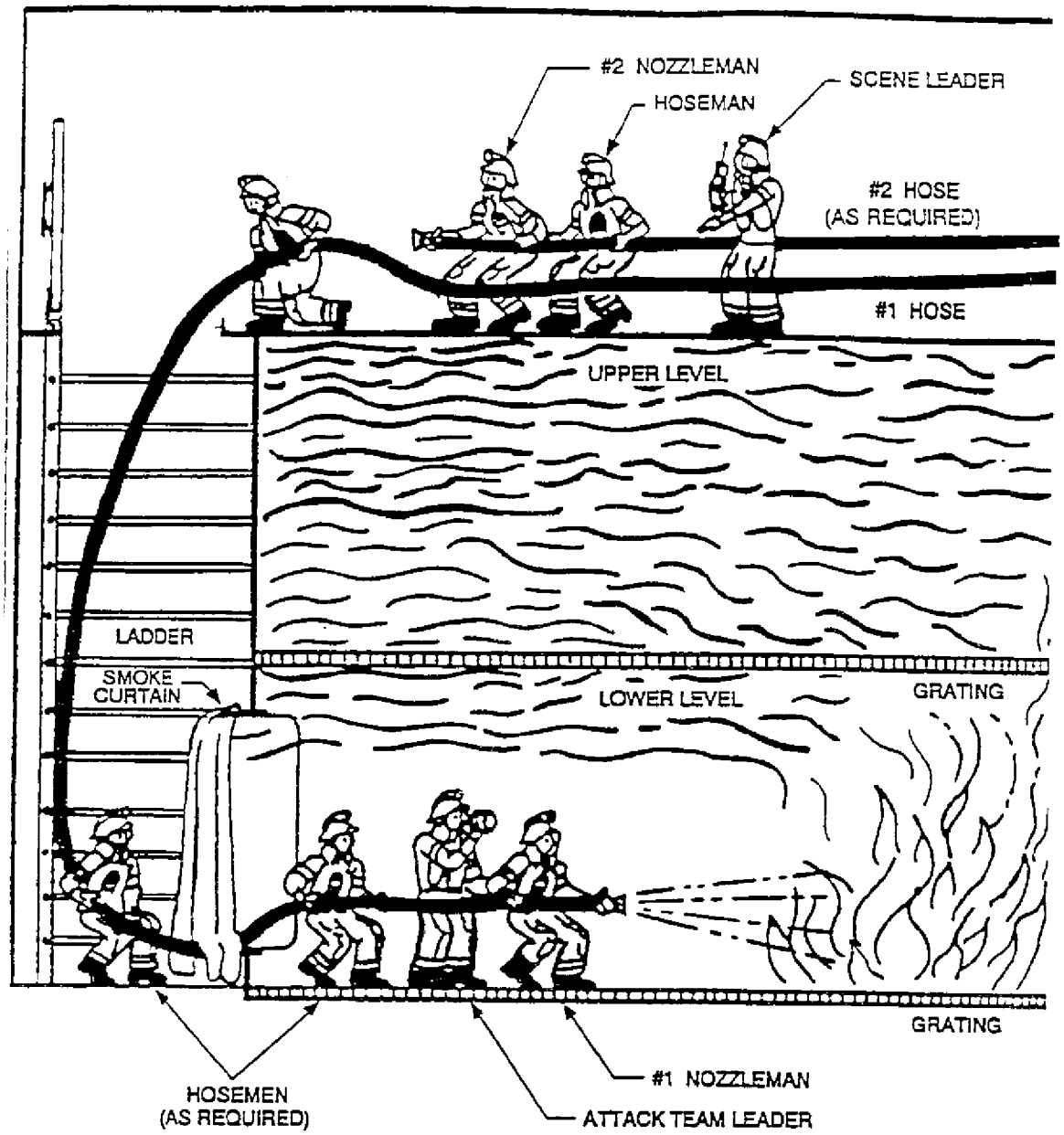

Figure 555-7-14 Vertical Trunk Hose Handling

555-7.14.6.5 Hose team withdrawal will normally consist of backing out the hose in the reverse order of entry. However, if the attack team leader determines that the hose must be abandoned in place and the exit is not visible, firefighters should follow the hose by feel, back to the exit.

555-7.14.6.6 A vertical trunk poses unique problems for exiting. Heat stress and fatigue are likely to be experienced by exiting firefighters. Climbing a vertical ladder under these conditions poses an additional risk of falling. Safety lines may be needed to reduce this risk. Plans should be developed for extracting incapacitated personnel up the vertical trunk.

SECTION 8.

SPECIAL FIRE SCENARIOS

555-8.1 INTRODUCTION

555-8.1.1 This section discusses special hazards for a variety of shipboard spaces and some useful procedures for firefighting.

555-8.2 ELECTRICAL FIRES

555-8.2.1 GENERAL. An energized electrical fire is a class C fire (see paragraph 555-1.6.4). The most effective tactic is to de-energize and handle the fire as a class A fire. A class C fire is attacked at prescribed distances using nonconductive agents such as CO_2 , Halon 1211 (where available) or water spray. When the fire is not deep seated, clean agents that pose no clean up problems such as Halon 1211 or CO_2 are preferred. Initial attack should be with a portable CO_2 (or Halon 1211) extinguisher. Although not as desirable, freshwater, seawater, or AFFF can be used to safely fight a class C fire, provided a fog pattern is maintained.

WARNING

Do not use NAP fog applicator, solid or straight stream water pattern on an energized electric source to avoid shock hazards. Maintain a minimum standoff distance of 4 feet when applying water to an energized electric source.

555-8.2.1.1 Electrical current will follow a solid stream, but will not be conducted between the droplets in a fog pattern. Fog patterns may be safely directed against energized equipment or cables carrying up to 4160 volts, if the nozzle is kept at least four feet from the energized source. Fog patterns can be achieved with both the vari-nozzle and Navy all-purpose nozzle high velocity fog tip. Preset the vari-nozzle to fog pattern before attacking the fire. Do not use NAP fog applicators or solid stream because both provide an electrical path back to the nozzle and are, therefore, shock hazards.

555-8.2.1.2 PKP should not be used in installations where relays and delicate electrical contacts are present. Where moisture is present, PKP may combine with it to corrode or stain surfaces on which it settles. It will leave a residue that may be hard to clean up.

555-8.2.2 PROCEDURE FOR FIGHTING AN ELECTRICAL EQUIPMENT FIRE. This procedure applies to all energized electrical equipment, including but not limited to switchboards, automatic bus transfers (ABT's), manual bus transfers (MBT's), panels, cabinets and motor controllers.

1. Secure electrical power to the affected equipment. In most cases, burning material in the equipment will self-extinguish after power is secured.

2. While power is being secured, extinguish any fire that spreads to materials beyond the equipment. Electrical equipment fires generally present a low risk of fire spread beyond the equipment. Use of CO_2 fire extinguishers is the preferred method for attacking an electrical equipment fire or a small class A (Alpha) fire in the vicinity of the electrical equipment. While attacking an electrical fire, keep the fire extinguisher outside the equipment. Do not make physical contact with any component on or within the equipment. If necessary to bring the fire under control, water fog may be used. Paragraph 555-8.2.1 allows the use of water fog, either seawater or fresh water, while keeping the nozzle at least 4 feet away from the energized equipment. Preset a fog pattern on the vari-nozzle before attacking the fire. Do not use a Navy All Purpose Nozzle fog applicator or a straight stream pattern due to the electrical shock hazard.

3. After power is secured, stand by while the equipment cools. If residual burning appears to continue in the equipment, CO_2 may be applied through vent louvers, if applicable. Emergency access into the equipment is usually not warranted and puts personnel at risk of burn injury. However, such access may be necessary to extinguish a fire that is sustained and threatens to spread beyond the equipment.

4. When the area is cool enough to access without risk of burn injury, enter in accordance with requirements of **NSTM Chapter 300** for working on damaged equipment (tag out and verify all circuits are deenergized). Determine the fire is out, conduct overhaul to assure the fire is completely extinguished, and affect repair. The fire in the equipment cannot be deemed completely out until the equipment is accessed and visually inspected. However, the compartment may be desmoked prior to accessing the equipment if there are no visible flames involving material outside the cabinet.

555-8.2.2.1 Emergency Access. In unusual, emergency cases, the man in charge at the scene may determine that the equipment needs to be accessed while still energized in order to secure power via internal fuses or to extinguish a fire that is sustained and threatens to spread beyond the equipment. Typically, the small amount of damage reduction gained by entry to extinguish the fire does not warrant the risk to personnel when entering an energized equipment. The man in charge at the scene shall determine if it is necessary to remove the equipment access (cover). He shall then determine what appropriate action needs to be taken and inform the space supervisor or EOOW after the action is taken. Commanding Officers' permission is not required when the man in charge judges that emergency action is needed. The following procedure shall be followed:

1. Don rubber gloves and remove the equipment access (cover). Insulated tools are not required, but are recommended if readily available. The investigator should not reach into or break the ″plane″ of the electrical equipment enclosure. For equipment with possibly energized switches, meters, relays or other components mounted on the cover, the ″plane″ should be adjusted to preclude entry into the area created by the arc of the cover as it is swung open. After the fire is extinguished and verified out, the equipment should be promptly closed, and personnel should use the safety precautions in **NSTM Chapter 300** prior to commencing further investigation.

2. While extinguishing the fire, keep the fire extinguisher nozzle outside of the equipment enclosure. Do not make physical contact with any component on or inside the equipment.

555-8.3 FLIGHT DECK FIRES

555-8.3.1 This topic is dealt with in the Firefighting NATOPS manual (NAVAIR 00-80R-14).

555-8.4 DEEP FAT FRYER FIRE

555-8.4.1 Fires in deep fat fryers generally result from overheating of cooking oils and fats, and subsequent self-ignition of the fat. Fires involving cooking oils and fats are class B fires. Most fires have occurred while the fryers were operating unattended, either through failure of personnel to remain at the units when operating or through failure to properly secure the units after use. Factors contributing to the intensity and spread of the fires include: delayed discovery of fire, grease laden ducts and hoods, and splashing and overflow of burning fat by a straight stream nozzle pattern discharged directly onto the fat liquid surface.

555-8.4.2 At the first sign of overheating (white smoke), shut off the fryer and place the cover securely on the fryer. Leave the cover on the fryer for at least five minutes. This will allow the hot cooking oil to cool down enough to prevent it from igniting.

555-8.4.3 Each galley should be provided with an aqueous potassium carbonate (APC) system, Figure 555-2-14. In the event of fire in the fryer, sound the alarm, secure power to the fryer, and manually actuate the APC system. The fusible links supplied with this system take one to three minutes to melt under optimum conditions. Therefore, automatic actuation of the APC system by the melting of fusible links is a back-up to manual actuation. Power may be secured at the fryer or from a remote shutdown located at the primary access to the space. Concurrently, if accessible, operate the damper control on the grease interceptor hood to close the damper.

555-8.4.4 Backup methods for extinguishing deep fat fryer fires are used only in the event the APC system fails to operate and extinguish the fire. Three methods are available and should be used in order of priority listed. The first two methods may be successfully used without personnel protection if the fire is detected early and if the space is tenable.

WARNING

Unprotected personnel should stay at least four feet from the deep fat fryer when discharging agent to avoid personnel burns from the splatter of hot cooking oil.

The third method requires personnel protection and may be used when the fire is confined to the fryer and should be used where the fire has spread into the space. In all cases, for any of these methods to succeed, the power to the fryer must be secured.

555-8.4.4.1 Method #1 - For ships so equipped, one person deploys AFFF portable 2-1/2 gallon extinguisher to the galley.

WARNING

Do not direct AFFF stream directly into the cooking oil. Plunging AFFF into the cooking oil can result in immediate boiling of the AFFF. Violent boiling may result in hot cooking oil being thrown out of the fryer.

a. From a distance of at least four feet to avoid hot splatter, apply AFFF to the back wall of the fryer allowing AFFF to flow onto the burning cooking oil surface. This technique does not disrupt the cooking oil. Lobbing the AFFF stream gently onto the cooking oil can also be effective but has some risk of plunging the AFFF into the cooking oil. Apply AFFF until the fire is out and a foam layer is developed (approximately 10 seconds). The initial range of the AFFF extinguisher is 15 feet, which decreases during discharge.

b. While applying AFFF, a second person rigs a 1-1/2 inch hose with vari-nozzle and brings to the scene as a backup.

c. Look in and around the fryer to be sure the fire is out.

d. If the cooking oil reignites, again apply AFFF until the fire is out (approximately 10 seconds).

e. Check grease interceptor hood, exhaust ductwork, and adjacent compartments for signs of fire and initiate firefighting in these spaces if necessary.

555-8.4.4.2 Method #2 - For ships so equipped one person deploys an 18 pound PKP extinguisher to galley.

a. From a distance of at least four feet to avoid hot splatter, apply PKP to control fire (approximately three seconds). Repeat if oil reignites. Too much PKP may force unprotected personnel to withdraw from the compartment. The effective range of the 18-pound PKP extinguisher is 19 feet.

b. While applying PKP, rig a 1-1/2 inch hose with vari-nozzle set in the narrow angle fog pattern and deploy to the galley.

WARNING

Do not apply a straight stream of water onto cooking oil. This may violently throw hot cooking oil out of the fryer creating a personnel safety hazard.

c. From a distance of at least four feet to avoid hot splatter, apply PKP simultaneously with narrow angle water fog to the burning cooking oil. To prevent flare up of the fire during the initial application of water, maintain PKP on the cooking oil for approximately three seconds. Stop discharging PKP when the fire goes out. Maintain narrow angle fog on the cooking oil surface for approximately one minute, sweeping gently from side to side, to cool and prevent reflash. Cooking oil which is splattered outside the fryer will quickly cool and should not reignite. Any residual fire outside the fryer may be easily extinguished by using the vari-nozzle.

d. Look in and around the fryer to be sure the fire is out.

e. If the cooking oil reignites, again apply PKP and narrow angle fog.

f. Check grease interceptor hood, exhaust ductwork, and adjacent compartments for signs of fire and initiate firefighting in these spaces if necessary.

555-8.4.4.3 Method #3 - If a portable AFFF or PKP extinguisher is not available, or the fire has spread beyond the fryer and into the space, the fire can be extinguished by personnel wearing protective clothing and breathing apparatus using water from a vari-nozzle set on a narrow angle fog pattern. Apply narrow angle water fog on the burning cooking oil surface for approximately one minute, sweeping gently from side to side, to extinguish the fire, cool the cooking oil and prevent reflash.

WARNING

The cooking oil fire may have a large flare-up on the initial application of water fog without PKP. This flare-up lasts approximately three seconds followed by fire extinguishment.

An uncontrolled deep fat fryer fire can spread rapidly from the fryer into the grease interceptor hood and exhaust ventilation ductwork as well as into the space. An attack with only water fog should not be delayed in order to bring portable fire extinguishers to the scene.

555-8.4.4.4 A deep fat fryer fire produces large volumes of hot irritating smoke. Additionally, application of PKP and water will make the atmosphere less tenable. Although the initial response can be made by unprotected personnel, they may be forced to withdraw due to untenable conditions. Breathing apparatus should be used when available, to replace initial response by unprotected personnel.

555-8.4.4.5 CPS equipped ships may have special vent system arrangements in the galley for use during galley fires. See the applicable ship's ventilation system technical manual.

555-8.5 GAS TURBINE OR DIESEL ENGINE ENCLOSURE FIREFIGHTING

555-8.5.1 Gas turbines and diesel engines are commonly shrouded in enclosures for cooling purposes and noise reduction. Historically, fires occur with these engines when lube oil or fuel oil gage lines, flexible lines, or filters fail and release flammable or combustible liquids onto hot surfaces. For this reason, gas turbine generator or diesel engine enclosure modules are fitted with either Halon or CO_2 flooding systems. These systems may be designed with flame and/or heat sensors to automatically detect fire and sound an alarm, secure engines and module ventilation, and discharge either Halon or CO_2 . Manual operation of these extinguishing systems also can be accomplished inside the machinery space or remotely at a console in the Engineering Operating Station or Damage Control Central. Reflash may occur following initial extinguishment by Halon or CO_2 , due to air movement and leakage that dilute the gas concentration. In the event of a class B enclosure fire beyond the capability of portable extinguishers, the following procedures apply:

1. Upon indication of fire, shut down the engine, report the fire, and then activate the Halon or CO_2 system.
2. Breakout and man an AFFF fire hose. Engineering Officer of the Watch determines if backup is required, including additional resources.
3. Visually monitor the enclosure, including the exhaust stack, for signs of continuing heat and smoke production, for 15 minutes prior to reentering the module. For ships equipped with a second shot of extinguishing agent:
   - a If the system does not discharge or if a reflash occurs during the 15 minute waiting period, activate the second shot of extinguishing agent and operate the bypass on the discharge delay. Continue to monitor conditions for an additional 15 minutes. Controls for actuating the second shot are located in the vicinity of the engine enclosure. Very recent ship designs provide for local and remote actuation capability for both the first and the second shots.
   - b If system does not discharge or if reflash occurs after the second discharge, ignore the 15 minute waiting period. Crack open an access door, attack the fire from the doorway with an AFFF hoseline, and extinguish

the fire. On CPS-equipped ships, opening the gas turbine engine enclosure will compromise the CBR protection in the machinery space. Appropriate CBR protective measures should be taken before opening the engine enclosure; see **NSTM Chapter 470** .

c In the event of a class C electrical generator fire, extinguishing agent may be applied with hand held equipment as soon as the generator is isolated from the switchboard and the prime mover is secured. It is permissible to fight a class ″C″ generator fire as soon as the generator is isolated and before it stops turning.

555-8.6 MINESWEEPER MACHINERY SPACE FIREFIGHTING DOCTRINE

555-8.6.1 MSO MACHINERY SPACE FIREFIGHTING

a. Three separate systems are available for fighting fires in MSO machinery spaces. Each system is designed for a specific situation, as described below:

b. The Halon 1301 system is intended to extinguish 2 and 3 dimensional flammable liquid fires of a type and size which force abandonment of the space. Each machinery space has one Halon system normally aligned to protect that space. The Halon system from the adjoining space can be realigned via manifold valves to supply a second shot.

1 The AFFF overhead sprinkling system is intended to extinguish and control 2 dimensional flammable liquid fires in the bilges.

2 The overhead seawater sprinkling system is intended to extinguish and control deep seated class A fires located in the overhead.

3 Portable extinguishers and AFFF hosereels shall be used in the manner described in Section 10 of **NSTM Chapter 555** .

c. Abandon the space fires shall be combatted as follows:

1 Prior to evacuation, if conditions permit, alert bridge and conduct an orderly shut down of the power plant. If this is not possible, secure plant remotely upon evacuation.

2 Upon evacuation, the last man out of the space shall actuate the Halon system.

3 Following Halon system discharge, align the Halon system manifold valves to direct remaining charge of Halon to space on fire in case it should be needed later. Do not actuate the second bank of Halon cylinders until it becomes necessary.

4 Reentry to the space shall follow no sooner than 15 minutes after the Halon system has been discharged, unless reflash occurs.

5 Where no reflash occurs, proceed with standard reentry techniques per **NSTM Chapter 555** , Section 10.

d. Should reflash occur prior to reentry, or upon reentry, immediately:

1 Re-evacuate the space.

2 Actuate the re-aligned opposite space Halon system.

3 Reentry to the space (second time) shall follow no sooner than 15 minutes after Halon system has been discharged, unless reflash occurs.

4 Where no reflash occurs, proceed with standard reentry techniques per **NSTM Chapter 555** , Section 10.

e. Should reflash occur prior to reentry (second time), or upon reentry, immediately re-evacuate the space, operate the overhead seawater system and overhead AFFF sprinkling system (since Halon 1301 is no longer available). Prior to reentry, the overhead seawater and AFFF sprinkler systems should be secured to provide visibility for the reentry team. Proceed with standard reentry techniques per **NSTM Chapter 555** , Section 10.

555-8.6.2 MCM MACHINERY SPACE FIREFIGHTING.

a. Three separate systems are available for fighting fires in MCM machinery spaces. Each system is designed for a specific situation, as described below:

   1 The Halon 1301 system is intended to extinguish 2 and 3 dimensional flammable liquid fires of a type and size which force abandonment of the space.

   2 Two AFFF proportioning stations provide foam to machinery space hose reels and bilge sprinklers for combating flammable liquid fires. The forward station supplies the bilge sprinklers in the Auxiliary Machinery Room (AMR) and Main Machinery Room (MMR), plus the in-space and reentry hose reels for the AMR. The aft station supplies the in-space and reentry hose reels for the MMR. Reentry into either the AMR or MMR should utilize the MMR reentry hose reel until SHIPALT MCM-106 is installed. This tactic is to better manage the limited supply of AFFF concentrate in the forward tank. SHIPALT MCM-106 increases the forward station tank size in addition to replacing existing FP-180 foam proportioners with fixed AFFF eductors.

   3 The overhead seawater sprinkling system is intended to extinguish and control deep seated class A fires located in the overhead.

   4 Portable extinguishers and AFFF hose reels shall be used in the manner described in Section 10 of **NSTM Chapter 555** .

b. Abandon space fires shall be combatted as follows:

   1 Prior to evacuation, if conditions permit, alert bridge and conduct an orderly shut down of the power plant. If this is not possible, secure plant remotely upon evacuation.

   2 Upon evacuation, the last man out of the space shall actuate the Halon system and ensure that the AFFF bilge sprinkling system has been actuated. Operate the AFFF bilge sprinkling system for up to four minutes (shut down at two minutes if SHIPALT MCM-106 has not been installed).

   3 Reentry to the space shall follow no sooner than 15 minutes after the Halon system has been discharged.

   4 Where no reflash occurs, operate the AFFF bilge sprinkling system for two minutes before reentry to ensure a vapor securing foam blanket.

   5 Proceed with standard reentry techniques per **NSTM Chapter 555** , Section 10.

c. Should reflash occur prior to reentry, or upon reentry, immediately:

   1 Re-evacuate the space.

   2 Actuate the reserve Halon system. Operate the AFFF bilge sprinkling system for two minutes. (For FP-180 installations, the forward AFFF tank may require addition of AFFF concentrate during firefighting operations.)

   3 Allow a Halon soak time of 15 minutes. Proceed with standard reentry techniques per **NSTM Chapter 555** , Section 10.

d. Should reflash occur a second time, operate the overhead seawater system. Prior to reentry, the overhead seawater sprinkling system should be secured to provide visibility for the reentry team. Proceed with standard reentry techniques per **NSTM Chapter 555** , Section 10.

NOTE

Simultaneous operation of the overhead and bilge sprinkling systems may overtax the available firemain supply.

NOTE

Overhead sprinkling activation should be ordered at any stage of the firefighting when the fire is believed to have extended to overhead or bulkheads.

555-8.6.3 MHC DOCTRINE - MACHINERY SPACES-MMR, AMR, GENERATOR ROOMS

555-8.6.3.1 Fire in Engine Enclosures

1. Secure affected engine. Set negative ventilation in accordance with paragraph 555-10.3.5.5.d (supply off). Other equipment and engines in the same machinery space may continue to be operated if the fire is confined to within one engine enclosure.
2. Attack fire with hand held equipment: portable extinguisher or AFFF hose line.
3. If fire remains confined to the enclosure but space becomes untenable, evacuate space and actuate Halon.

WARNING

Space will rapidly become dangerously untenable if initial attack is not immediately successful.

4. Wait at least 15 minutes during which the space is monitored for continuing smoke production and elevating temperatures.
5. If monitoring indicates fire is controlled or extinguished:
   a MMR & AMR. Activate AFFF bilge coating system for one minute to vapor secure any combustible liquids that may have accumulated in the bilge; reenter in full personal protective gear with AFFF hose line.
   b Generator Rooms. Reenter in full personal protective gear with AFFF hose line. Prior to proceeding past entry door, discharge AFFF into bilge area for one minute to vapor secure combustible liquids that may have accumulated.
6. If a reflash is evidenced during the monitoring period or during reentry, abandon the space, secure all engines and equipment in the space, activate the second shot of Halon, activate the space AFFF sprinkling system for a minimum of 2 minutes. Apply the doctrine for an abandon space fire in a machinery space.

555-8.6.3.2 Abandon Space Machinery Space Fire

1. When fire external to an engine enclosure forces space to be abandoned, secure plant, and activate Halon and AFFF sprinkling. Operate sprinkling for a minimum of 2 minutes.
2. Wait 15 minutes while space is monitored for heat and smoke generation. When fire appears out or under control, reenter with full personal protection and an AFFF hose line. Back up AFFF hose line to be in place from other station or an in-line eductor. Prior to reentry, activate AFFF sprinkling for two minutes to cool area, wash all combustible liquids to bilge and recoat bilge with AFFF.
3. If reflash occurs during the monitoring period or during reentry, activate the reserve Halon shot (MMR only), and reactivate the AFFF sprinkling for a minimum of 2 minutes. If Halon was used, wait 15 minutes prior to reentry and overhaul, otherwise use on-scene judgment to determine reentry time. Sprinklers should be operated for two minutes prior to reentry.

NOTE

AFFF should be reactivated at any time an abandon space fire is determined to be continuing or intensifying.

555-8.6.3.3 MHC Machinery Space Installed Fire Protection Systems

555-8.6.3.3.1 Halon 1301. This system is intended to extinguish 2- and 3-dimensional combustible liquid fires of a size that forces abandonment of the space. The Engine Room has a two-shot Halon system and the Auxiliary Machinery Room and Generator Rooms have a one-shot Halon system.

555-8.6.3.3.2 AFFF. Two fixed eductor type AFFF proportioning stations provide foam to machinery space hose reels and bilge and overhead sprinklers. The forward station (No. 1) supplies Generator Room 1 and the AMR. The aft station (No. 2) supplies Generator Room 2 and the MMR. An AFFF hose reel is installed at the top of the access ladder of the AMR and the MMR. The sprinklers are to extinguish and control combustible liquid fires in the bilge and other horizontal surfaces, wash combustible liquids to the bilge and extinguish class A fires involving the bulkheads, overhead and other such materials. On MHC 53 and follow-on hulls, a three-way control valve on the eductor to the hose reels can be operated to direct AFFF into the bilge of the respective AMR or MMR space for the purpose of coating an unignited combustible liquid spill as a vapor-securing measure. ″Normal″ alignment is to hose reel. MHC 51 and 52 have a normally open valve which will isolate the overhead sprinklers to allow coating of a spill in the bilge. AFFF hose lines are used for spill coating in the two generator rooms. One minute of flow is adequate to vapor-secure a bilge.

555-8.6.3.3.3 Seawater Sprinkling. The AFFF sprinkler systems will discharge seawater should the AFFF concentrate tank become depleted. Therefore, cooling will continue. As a back up to AFFF system failure, a valved cross connect line to the fire main allows the fire main to directly supply the bilge and overhead sprinklers.

555-8.6.3.3.4 Portable Extinguishers. Halon 1211, PKP and AFFF portable extinguishers are available to allow immediate attack on incipient fires within the spaces, including initial attack on fires within the engine enclosures.

NOTE

Halon 1211 portables will be phased out under the Navy Chlorofluorocarbon (CFC) reduction program and replaced with PKP and CO_2 extinguishers.

555-8.7 FLAMMABLE GAS FIRES

555-8.7.1 A class B gas fire can immediately grow out of control and require evacuation. When not in use, cylinders containing flammable gases are normally stored in the weather or in flammable gas storerooms. Common shipboard flammable gases include acetylene, MAPP gas, and hydrogen. See **NSTM Chapters 550 and 670** for specific information on gases, and paragraph 555-1.4.3.3 for characteristics of flammable gases.

a. Securing the fuel source is the single most important step in controlling a gas fire. DO NOT EXTINGUISH A GAS FIRE with fire extinguishing agents, unless the leak is small and the source may be quickly secured. If a gas fire is extinguished without securing the source, the accumulated unburned gases may reignite and explode, causing greater damage than the unextinguished fire. A gas fire can be extinguished with HALON 1211, HALON 1301, or potassium bicarbonate (PKP) dry chemical.

b. After securing the fuel source, extinguish residual fire (non-gas fire) involving surrounding material with the appropriate agent.

c. If the fuel source cannot be secured, control adjoining fires with the appropriate agent. Exposed compressed gas cylinders, or other hazardous materials or systems, should be cooled with a continuous film of water or AFFF to prevent container or system rupture and fire involvement. Exposed weapons, flammable gas cylinders, flammable liquid containers, oxygen cylinders or oxidizing agent containers should receive priority in cooling.

d. If the side wall of a compressed gas cylinder is subjected to intense local heat such as with a hot flame impinging upon a small portion of the cylinder, the metal may soften, bulge and fail before the internal gas pressure increases sufficiently to cause the safety disk to rupture.

e. If the safety disk ruptures, flame may shoot out 10-12 feet. If the cylinder wall ruptures, the flame may become a large fire ball. In both cases, if there is no way to secure the source, cool exposed materials or systems subject to ignition or failure with water fog or AFFF until the fuel is consumed.

f. If the flammable gas fire is in the weather, approach from upwind if possible.

g. Leaks may occur around a cylinder valve. If a cylinder valve leak occurs and the flame is small, the flame may be wiped-off with a rag or glove. Dispose of the leaking cylinder immediately in accordance with **NSTM Chapter 550** .

555-8.8 VITAL ELECTRONICS SPACE FIRE FIGHTING DOCTRINE

555-8.8.1 GENERAL

a. The primary objective of this doctrine is to provide procedures for maintaining vital electronic equipment and spaces in operation which are exposed to fire or smoke, when short-term equipment function is required to support tactical requirements, such as during Battle Condition I.

b. The primary hazard to the ship from fires which start in electronics spaces is the large volume of smoke caused by burning cables. The rate of fire spread in this scenario is slow, but the rate of smoke production is rapid. A small electrical fire involving burning cable can create untenable conditions for unprotected operators in as little as one minute. Untenable conditions due to hot toxic smoke will result in impairment or death to unprotected operators who do not evacuate immediately. Smoke damage to electronic equipment can occur in 5-10 minutes; however, equipment is expected to remain operable for a longer period of time. Smoke particulates can damage tape and disc drives. Smoke from polyvinyl chloride cable jackets, when combined with moisture, produces corrosive acids. Effects due to corrosion usually occur 24 hours after exposure. Since dense smoke can rapidly spread to other compartments, early measures to control smoke are important.

c. If the Commanding Officer or Tactical Action Officer decides continued operation of equipment in spaces exposed to fire or smoke is necessary, coordination between the electronics casualty control (Repair 8) and the damage control organization is necessary to avoid incidental damage to electronics equipment or injury to personnel and minimize combat system interruption. In this situation an electronics casualty control representative, at the direction of the Combat Systems Officer of the Watch (Repair 8 Officer), will assist the scene leader in fighting electronics space fires.

CAUTION

A decision to continue operation in a smoke-filled room may result in increased damage to the equipment. Entry by fire fighters with seawater

Caution - *precedes*

hoses may result in unnecessary damage to electronics equipment and presents a potential shock hazard to all personnel in the immediate area.

d. Direction to the electronics casualty control representative is through the electronics casualty control chain of command. Direction to the fire party Scene Leader is through the damage control chain of command. The electronics casualty control representative and the Scene Leader should closely coordinate their decisions, actions, and reporting. Except for carriers, the Scene Leader has overall responsibility at the scene. For carriers, the Repair 8 team leader has overall responsibility at the scene.

555-8.8.2 ELECTRONICS CASUALTY CONTROL ORGANIZATION. The following electronics casualty control (ECC) personnel, in addition to the fire party personnel described in 555-5.1.1, are important in fighting fires in operational electronics spaces. The ECC organization described here is based on the Combat System Operational Sequencing System (CSOSS). For non-CSOSS ships, the functionally equivalent positions, such as Repair 8, would apply.

555-8.8.2.1 Commanding Officer (CO) or Tactical Action Officer (TAO). The CO or TAO will make decisions regarding the need for continued operation of electronics spaces affected by fire in order to support tactical requirements based on damage and repair reports received from the ECC and DC organizations.

555-8.8.2.2 Combat System Coordinator (CSC), Combat System Readiness Officer (CSRO) and Combat System Maintenance Control (CSMC). The CSC, CSRO and CSMC provide combat system status and impact reports as a result of fire and smoke conditions in electronics spaces to the CO or TAO. They relay orders from the CO or TAO regarding continued operation of electronics spaces and equipment affected by the fire.

555-8.8.2.3 Combat Systems Officer of the Watch (CSOOW) and Repair 8 Officer. The CSOOW and Repair 8 Officer informs the TAO through the appropriate chain of command of fire and smoke conditions affecting combat systems spaces and of the impact of fire and smoke on combat systems equipment. He coordinates combat systems casualty control action with the Damage Control Assistant and the Engineering Officer of the Watch. He relays orders received regarding continued operation of electronics and equipment spaces affected by fire. On ships which do not have a CSOOW this function is normally performed by Combat System Maintenance Control.

555-8.8.2.4 Space Supervisor/Repair 8 Personnel. The Space Supervisor/Repair 8 personnel directs and performs initial fire fighting actions until the fire party arrives. He informs the ECC organization of space and equipment conditions. He coordinates his actions with and supports the fire party Scene Leader. He executes orders received concerning continued operation of electronics equipments and space during fire and smoke conditions. He informs the ECC organization when the decision has been made to evacuate the space.

555-8.8.3 INITIAL ACTIONS - REPORT FIRE AND ITS LOCATION. The report of the fire and its location, compartment number and name must reach the Officer of the Deck by whatever method available, such as by messenger, telephone, or announcing system.

555-8.8.4 FIRE ATTACK. Fire attack normally includes one or more of the following steps with the objective of continued operation of vital equipment:

1. Size up the fire.

2. Isolate affected equipment.
3. Attempt extinguishment of the localized fire.
4. Fight fire while continuing operation of vital equipment.
5. Establish fire and smoke boundaries.
6. Evacuate the space if fire grows out of control.
7. Electrically & mechanically isolate equipments of space.
8. Re-enter space and extinguish fire.

The following information regarding electronics space fires supplements and emphasizes the fire fighting guidance in other sections of this chapter.

555-8.8.4.1 Size Up the Fire. These actions are normally performed by the Space Supervisor or first response personnel for an unmanned space:

1. Determine the location and nature of the fire.
2. Determine what the initial action should be; including attempt extinguishment with portable extinguishers, secure individual equipment or system, confine smoke to a localized area and direct breathing apparatus be donned or evacuate the space.
3. Determine whether or not continued manning or continue equipment operation is feasible.
4. Report conditions.
5. Request a decision on whether or not continued manning and/or equipment operation in the affected space is required to meet tactical requirements. The decision to abandon a space will usually be made by personnel on the scene, based on the assessed risk to life safety.

555-8.8.4.2 Isolate Affected Equipment. Equipment affected by the fire should be isolated. This can reduce fire size if the equipment is burning, reduce equipment damage, and reduce undesirable effects on the combat system operation. See paragraph 555-8.8.4.7.

555-8.8.4.3 Attempt Extinguishment of the Localized Fire. As long as conditions permit personnel to remain in the space, extinguishment of the fire with portable extinguishers should be attempted. Fresh water hose reels with vari-nozzles, when available, should be used by watchstanders or repair party personnel to extinguish localized fires when portable extinguishers are ineffective. Prompt fire extinguishment can prevent an intense fire and limit equipment damage. Individual equipments which are burning should be secured.

555-8.8.4.4 Fight Fire While Continuing Operation of Vital Equipment.

a. When smoke and/or fire are present and the decision is made to continue operation of manned vital equipment, the Space Supervisor should assure that breathing apparatus are provided and donned by space personnel. Non-vital personnel should be evacuated to prevent injury or ingestion of toxic smoke.

WARNING

Personnel not wearing breathing apparatus should evacuate smoke-filled spaces.

Fire parties and vital personnel will select agent and method of extinguishment. They will coordinate their efforts to maintain operation of the space while the fire is being fought. Where water is used, action may be required to protect adjacent exposed electronics. One or more smoke curtains or other fire resistant material draped over electronics exposed to over-spray both in the space and/or adjacent spaces is one method to minimize damage and maintain equipment operation. The use of more than one portable extinguisher at a time is more effective than using them one at a time.

b. Service to the affected space such as low pressure air, ventilation supply, exhaust and recirculating systems, electronics cooling water, lighting and electrical power normally will be kept in operation during the attempts to extinguish a localized fire, such as a fire which is limited to a single equipment. The decision to secure a system or service to assist the fire fighting effort must be coordinated with both the damage control and ECC organizations to minimize interruption of combat system operations.

c. The Space Supervisor/Repair 8 representative directs the firefighting effort until the fire party arrives. The fire party Scene Leader is in charge of fire fighting when he arrives (see paragraph 555-8.8.1.d.). The Space Supervisor should brief the Scene Leader on the location of the fire, what is burning, best route for access to the fire area and whether he has accounted for all personnel. The Space Supervisor or an ECC representative is assigned to assist the Scene Leader to coordinate their activities to keep equipment operating to meet tactical requirements, to limit damage to equipment due to fire fighting efforts, and to fight the fire.

d. If it is evident that portable extinguishers are not effective and continued space operation is essential to meet tactical requirements, a decision should be made on whether or not to attempt extinguishment by limited use of water hoses. Only severe circumstances would dictate the use of water to combat a class C fire while the equipment is still energized.

555-8.8.4.4.1 Fresh water hose reels, when available, should be used by watchstanders or fire party personnel. The hose reel is equipped with 3/4 inch diameter hose and a vari-nozzle. The advantage of using fresh water over seawater is that freshwater is not corrosive. Additionally, a hose reel allows application of less water with less over-spray on vital electronic equipment and allows for operation by one man.

555-8.8.4.4.2 Both seawater and freshwater may be safely used on energized electrical equipment as long as a minimum 30 degree nozzle spray pattern (e.g. high velocity fog) is used and a minimum standoff distance of 4 feet is maintained. However, equipment damage may result.

WARNING

Do not use NAP fog applicator, solid or straight stream pattern on an energized electric source to avoid shock hazards. Maintain a minimum standoff distance of 4 feet when applying water to an energized electric source.

555-8.8.4.5 Establish Fire and Smoke Boundaries.

a. Large volumes of dense smoke are expected in electronics space fires. Smoke control procedures are required to confine the smoke, as much as possible, to the space with the fire.

b. Smoke boundaries should be established quickly by closing doors, hatches and scuttles to the affected space. In adjacent spaces which are receiving smoke through replenishment air supply or exhaust ducts, smoke dampers should be closed, where installed. As additional fire fighting personnel become available, smoke curtains should be installed where they will be effective in preventing the spread of smoke into electronic spaces.

555-8.8.4.6 Evacuate the Space If Fire Grows Out of Control. The Space Supervisor or, when present, the Scene Leader should order space evacuation when it is evident that conditions will not permit personnel to remain in the space. The CO/TAO, CSC/CSRO/CSMC, CSOOW and DCA, as applicable, should be informed of conditions in the space, including equipments secured and the threat to other equipments in the space. This information will aid in assessing losses in combat capability.

555-8.8.4.7 Electronically and Mechanically Isolate Equipments or Space.

a. Coordination with the CSC, CSRO or TAO, as applicable, is needed before isolating electronics equipments and spaces to assure that the tactical needs of the ship are considered before a combat system capability is disabled. An exception is when electronics equipment that is the source of a fire or is burning should be shut down immediately and the CSC, CSRO or TAO should be informed of the actions taken.

b. The DCA is responsible for isolating the space after evacuation. Coordination between the CSMC or CSOOW and the DCA and between the Space Supervisor and Scene Leader should occur when isolating electronics spaces.

c. Electronics cooling water is not normally isolated unless it is evident that it is causing problems in fire fighting or affecting other spaces. Electronics cooling water is maintained to continue to cool equipment and hoses in order to minimize damage to electronics equipment.

d. Fires which burn for an extended period may require boundary cooling. Cooling hot boundaries can generate steam. Hot spots can be located with the aid of the Naval Fire Fighting Thermal Imager (NFTI). Short bursts of water directly onto hot spots is the safest and most efficient method of boundary cooling. Boundary cooling inside an electronics space should be coordinated with the Space Supervisor. In addition, combustibles in contact with fire-exposed decks and bulkheads should be removed to avoid ignition and fire spread.

555-8.8.4.8 Re-Enter Space and Extinguish Fire. If a vital electronic space has been evacuated and the fire party is attempting to re-enter the space, the following applies:

a. A combat systems technician should be assigned to assist the Scene Leader in fighting the fire.

b. Attempt to locate the fire before attempting to extinguish it. Use the NFTI and information provided by personnel who evacuated the space.

c. Use water when it is evident that CO_2 portable extinguishers will not be effective. If the fire is still localized to a portion of the space, water spray on uninvolved electronics equipment should be minimized.

d. It is probable that all electrical power in the space will not be secured before reentry. If water must be used, a minimum 30 degree angle fog pattern (e.g. high velocity fog) may safely be directed against energized equipment or cable.

555-8.9 MK-50 TORPEDO FIREFIGHTING PROCEDURES

555-8.9.1 GENERAL. The propulsion system internal to the MK-50 torpedo is fueled by 16 pounds of lithium. Lithium is a highly reactive combustible metal (class D fire). Under normal circumstances the lithium remains in a solid state contained within a stainless steel boiler inside the torpedo. Even when the boiler is activated in the propulsion mode, all lithium combustion remains within the boiler enclosure. The lithium will only present a firefighting problem if the boiler is breached due to physical damage to the torpedo. Rupture of the boiler could result in the release of molten lithium. If molten lithium is exposed to the air, burning will result on the surface of the lithium mass. Though considerable heat and light is released when lithium burns, flame height is very low (similar to burning lava or charcoal briquettes). Burning lithium presents a unique challenge to shipboard firefighters because it cannot be extinguished using conventional firefighting agents. Additionally, burning lithium reacts with water (or AFFF) to produce hydrogen gas. If confined, such as in a closed magazine, hydrogen can ignite with explosive force capable of rupturing doors and bulkheads.

WARNING

Burning lithium emits a toxic and caustic particulate cloud. Do not breathe or expose yourself to the particulate cloud. Breathing of the particulate may cause damage to respiratory systems. Exposure to the particulate cloud may also cause burning and damage to the eyes. Molten lithium will burn the skin. The white light emitted by burning lithium can cause eye burns. Avoid looking directly at the lithium.

WARNING

Application of HALON, PKP or CO_2 is not effective against burning lithium and will cause adverse secondary reactions. Direct application of HALON, PKP or CO_2 to burning lithium should be avoided.

WARNING

The application of water or AFFF on a lithium fire results in a decomposition of water into hydrogen and oxygen. Liberated hydrogen may violently ignite if confined and allowed to reach its lower explosive limit. This hydrogen ignition may produce a pressure wave and burning lithium can be scattered a distance of approximately 50 feet. Proper personnel protective clothing (proximity suits or standard navy firefighting ensembles) and breathing apparatus should be worn when attacking a lithium fire.

WARNING

Burning lithium which is in direct contact with an aluminum deck can melt through the deck. Burning lithium on a steel deck may cause warping or

Warning - *precedes*

cracking of the deck. A fire watch should be placed in the area immediately below the burning lithium. To forestall damage to the deck, apply water to the underside of the deck immediately beneath the lithium. Previous fire suppression tests for burning lithium have resulted in 3/8 inch aluminum plate burning through in less than three and half minutes.

555-8.9.2 FIRE SCENARIOS. There are three conceivable, though improbable, shipboard scenarios where lithium could escape from the MK-50 torpedo and burn.

a. An aircraft crash on the flight deck which results in rupture of the torpedo boiler.

b. Rupture of a torpedo boiler inside a deck-mounted torpedo launch tube due to bullet or fragment penetration. In this case there could be burning inside the tube and possibly burning chunks of lithium on the deck surrounding the tube.

c. Bullet penetration of torpedoes stowed in a topside magazine due to enemy or terrorist gun fire. Similarly, torpedoes in a topside magazine could be ruptured by collision with another ship as occurred aboard a DD-963 class ship in 1991.

555-8.9.3 RECOMMENDED PROCEDURES. The primary concern in any MK-50 fire scenario is uncontrolled spread to adjacent pieces of ordnance and, in the worst case, cook-off of exposed warheads. Sympathetic chain ignition of multiple pieces of ordnance or torpedoes and eventual mass detonation of warheads could destroy the ship; hence, rapid cooling is essential. It must be remembered that if a torpedo's boiler is breached, it is likely that the same torpedo's warhead or adjacent warheads may be threatened by burning lithium. In spite of the potential for hydrogen generation, cooling with water or AFFF must be initiated as soon as possible to protect against potential warhead cook-off or other adverse ordnance reactions.

a. Flight Deck Procedures. Flight deck firefighting tests involving the MK-50 and AFFF applied from hoselines and flush deck nozzles have shown that in open air the hydrogen combustion reaction, if any, is not hazardous to firefighters at a 50 feet upwind standoff distance (the normal standoff distance for flight deck fires involving potential ordnance reactions).

b. Torpedo Launch Tube Procedures. For a fire within or adjacent to a MK-50 torpedo tube efforts should focus on the prevention of warhead cook-off by applying water from hose lines from the maximum stand-off distance. Full protective clothing and breathing apparatus should be worn. If at all possible, attempt to jettison burning lithium (and preferably the torpedo) over the side. Burning chunks of lithium on the deck may be scooped up with a shovel once the warhead is no longer exposed. A straight stream of water may also be successful in washing burning lithium overboard. For aluminum decks, be alert to possible deck melt-through where burning lithium remains in contact with the deck. A fire watch should be placed in the area immediately below the burning lithium. If necessary, apply water to the underside of the deck beneath the lithium. If possible, the ship should be steered to direct the resultant smoke cloud away from the ship.

c. MK-50 Fire Within A Magazine. As with any magazine, fire within MK-50 magazine will be evident from several indicators: activation of the high temperature alarm, activation of the sprinkler water flow or flooding alarm, elevated temperature of the magazine door or surrounding bulkheads, or smoke emanating from the magazine. There will be no way to know precisely what is burning inside the magazine, especially for magazines having mixed stowage of MK-50's, MK-46 torpedoes, and other helo-launched ordnance such as Penguin Missiles. The fire could involve warhead explosive fills, liquid OTTO fuel from MK-46's, lithium from MK-50's, solid missile propellant, or some other combustible internal to the magazine. In any case, the best

tactic is to remain outside the magazine and allow the sprinklers to flow until all evidence of burning has ceased (ie; no heat or smoke coming from the magazine). As a precaution, fire parties should take the following steps:

1 Wear full protective clothing and breathing apparatus.
2 Evacuate unprotected personnel from the vicinity of the magazine (preferably to a distance of at least 50 foot). All unprotected personnel must be moved behind secondary fire boundaries.
3 If the sprinkler system has not tripped automatically, trip via manual control valve.
4 Establish fire boundaries and initiate boundary cooling on all six sides.
5 Stand clear of magazine doors.
6 If possible, open exterior magazine doors to provide a vent path to the weather.
7 Perform whatever dewatering is necessary to maintain stability.

NOTE

If, for whatever reason (such as valve failure or loss of firemain supply to magazine), the magazine sprinkler system will not activate, it is imperative that water be applied as quickly as possible from hose lines by reaching around door openings or through access holes cut in the overhead or surrounding bulkheads.

555-8.10 GASOLINE (MOGAS) JETTISON RACK FIRE

555-8.10.1 Many ships are fitted with gasoline on jettison racks located in the weather. Gasoline presents a severe fire hazard because, with a flash point of approximately -45°, it produces ignitable vapors over a wide range of temperatures. These vapors are heavier than air and will form an ignitable mixture with air at only 1.4 percent (LEL). See paragraph 555-1.4.3.2 and Table 555-1-2 for more information.

555-8.10.2 While rack designs vary, all have a remote manual release. Some also have a fusible link releasing system. See **NSTM Chapter 542, Gasoline and JP-5 Fuel Systems** , and **NSTM Chapter 670, Stowage, Handling, and Disposal of General Hazardous Use Consumables** , for jettison rack design information. Some ships have AFFF sprinklers on weather deck sponsons with solid deck plating to extinguish a pool fire under the rack. All racks should be provided with AFFF hose coverage.

555-8.10.3 Gasoline containers should be jettisoned from the rack when threatened by an exposing fire. Ships with gasoline on jettison racks should pre-plan for a possible fire that may involve drummed or portable gasoline containers. The procedure to follow in event of fire is to report the fire, jettison the MOGAS and secure ventilation systems with intakes in way of portable MOGAS stowage. Attack any remaining pool fire with PKP extinguisher and/or AFFF hose line. Operate AFFF sprinkling system as needed.

555-8.11 MASS CONFLAGRATION

555-8.11.1 INTRODUCTION.

555-8.11.1.1 Scope. This discussion provides an understanding of mass conflagration firefighting that can serve as a basis for effective decisions and actions. It emphasizes the Repair Party Leaders' (RPLs') and Damage Control Assistant's (DCA's) management of the overall firefighting effort. Guidance for scene leaders and attack team

leaders related to firefighting techniques and tactics is provided in other paragraphs of this chapter. Responsibilities for senior personnel (e.g., CO and XO) are discussed in **Naval Warfare Publication (NWP) 3–20.31 (series), "Surface Ship Survivability."**

555-8.11.1.2 Discussion. A mass conflagration is a major fire, involving several compartments and multiple decks. Controlling a mass conflagration typically requires a sustained, coordinated effort by several repair parties. Understanding of the overall situation by RPLs and DCA is essential for effective direction of the firefighting efforts and proper management of relief personnel and attack team rotations. The behavior of a mass conflagration will vary with each incident; this discussion does not attempt to cover all potential circumstances that would arise. Successful control of a mass conflagration may require deviations from, or extrapolations beyond, this discussion. The "Fog of War" analogy is most appropriate in this environment. In the "Fog of War", lack of timely information, high stress in individuals, loss of key personnel due to casualties, battle damage to communication systems and reduced internal access will all contribute to the general confusion. This will result in inefficient damage control efforts and misdirected actions which will reduce the overall effectiveness of ship damage control.

555-8.11.1.2.1 Limitations. The weapons hit induced mass conflagration scenario presented here does not include several potential effects which would significantly change the damage control manning and priorities established by the DCA and RPLs:

a. Personnel Casualties. Large scale personnel casualties, as were suffered by the USS STARK in 1987, are not included in this scenario. Large scale casualties, besides loss of repair party personnel, would require many personnel for search and rescue and delay and impede firefighting efforts. Injured personnel could be exposed to fire spread, heat and smoke which would divert hose teams to provide for their protection until they could be removed to safety. Search and rescue efforts could continue to be required as hose teams advance deeper into the damaged area. Key damage control and leadership personnel may not be available to help organize efforts to combat the casualty. It may become necessary for senior personnel to organize the crew and obtain a count of those who are missing and where they may have been at the time of the casualty (i.e. watchstander in a casualty space, messing at the time, sleeping, etc.) to help localize search and rescue efforts.
b. Flooding. Severe flooding, the primary cause of ship losses, is not included in this scenario. It could require personnel for shoring, plugging, patching and dewatering to maintain ship stability.
c. Ship Systems Restoration. Restoration of propulsion, other vital ship systems such as electrical distribution and chilled water, and combat systems capabilities are not included in this scenario. It could also affect damage control efforts.

555-8.11.1.3 Damage Control Command Structure. Responses to damage are initiated by the DCA and the repair party leaders.

a. Damage Control Assistant (DCA). The DCA concentrates on coordinating actions among repair parties, coordinating damage control with other shipboard organizations, and anticipating and preparing for the long term needs of the repair parties. The DCA's decisions are based primarily on reports from repair party leaders and others outside the damage control organization.
b. Repair Party Leader (RPL). Repair Party Leaders concentrate initially on dispatching investigators, establishing fire and smoke boundaries, dispatching attack teams, and controlling smoke spread. After the initial response, RPLs manage fire boundarymen via the investigators, establish and maintain a system of personnel relief, maintain control of operations within their area of responsibility and coordinate actions with the DCA and other RPLs. RPL decisions are based primarily on reports from investigators and the scene leader.

555-8.11.1.4 Managing Resources. A mass conflagration can require repair parties to operate jointly in a local area and also teams from different repair parties to work together. The DCA will need to ensure that there are clear-cut zones of responsibility for each repair party and reallocate manpower resources as required between repair parties to successfully coordinate a balanced, multiple repair parties).

a. Reassigning Zone of Responsibility. Where multiple repair parties are operating together, the DCA may need to reassign clear-cut zones of responsibility as necessary (e.g., by subdivision and deck) for each repair party to ensure coordination of multiple teams, prevent overlapping of efforts and to ensure all casualties are detected and responded to. Within a repair party's zone of responsibility, the repair party's designated scene leader would direct the efforts of all attack teams (including teams from other repair parties).

b. Reallocating manpower resources. The DCA may need to reallocate manpower resources to augment an existing fire attack. This can be done by several methods:

   1 by adding personnel from a pool of ships force personnel staged outside the fire and assigning them to a repair party.

   2 by directing teams from other repair parties to report to and work for the designated area scene leader. These teams still report back to their original repair party for relief, recuperation, and reassignment.

   3 by transferring a team to a different repair party.

555-8.11.1.5 Repair Party Organization. For this scenario, the ship has three repair parties — Repairs 2, 3 and 5. An additional unmanned Damage Control Repair Station (DCRS) is located aft which is used to help equip supplemental personnel. Each repair party is initially manned with 25 personnel, who fulfill the functions outlined in NWP 3–20.31 (series). Four personnel are stationed within each repair locker: a repair party leader, plotter, phone talker, and messenger. Typical firefighting assignments for each party include two, four-person attack teams, each composed of an attack team leader, nozzleman, and two hosemen. The team response from each repair party is shown below.

555-8.11.1.5.1 Attack Team Response for this Scenario is:

ATTACK TEAM RESPONSE

Repair 2 Teams	Repair 3 Teams	Repair 5 Teams
21-1 (original)	31-1 (original)	51-1 (original)
21-2 (supplemental)	31-2 (supplemental)	51-2 (supplemental)
21-3 (supplemental)	31-3 (supplemental)	51-3 (supplemental)
21-4 (supplemental)	31-4 (supplemental)	
21-5 (supplemental)		52-1 (original)
	32-1 (original)	52-2 (supplemental)
22-1 (supplemental)	32-2 (supplemental)	52-3 (supplemental)
22-2 (supplemental)	32-3 (supplemental)	
22-3 (supplemental)	32-4 (supplemental)	
	33-1 (supplemental)	
	33-2 (supplemental)	
	33-3 (supplemental)	

555-8.11.1.5.2 Attack teams are marked original and supplemental to distinguish between those which are part of the repair party organization as discussed by NWP-3–20.31 (series) and new attack teams composed of available ship's force personnel. Repair 2 as listed as only having a single original attack team because extra investi-

gators, boundarymen and smoke controlmen are dispatched. Attack team 22 comes entirely from ship's force relief personnel dispatched to Repair 2 by the DCA. Attack team 33 is also composed entirely of supplemental personnel being assigned to Repair 3 by the DCA.

555-8.11.1.5.3 The attack team numbering system consists of three digits composed of the Repair Party number, hose number and team number. For example, attach team 31–2 is Repair 3's first hose with the second team (first relief). In a ship with a split repair locker configuration (such as 3A and 3B), this allows for using the full repair designation without causing confusion such as attack team 3A1–2 for Repair 3A. For initially running the hose a long distance to the scene, the attack team maybe augmented by two or three additional hosemen. Other assignments include setting fire boundaries which could require hosemen temporarily assigned to layout multiple lengths of hose.

555-8.11.1.6 Reduced Manning Concepts. This mass conflagration discussion does not incorporate emerging reduced manning damage control concepts, such as the "Smart Ship" Initiative. The contents of this section should not be used to discourage innovative efforts to increase the effectiveness of fire parties.

555-8.11.2 MASS CONFLAGRATION SCENARIO

555-8.11.2.1 Scenario Basis. The hypothetical mass conflagration scenario for this discussion results from a hit by an anti-ship missile. The times notes for specific actions or events indicate the time after the missile hit. The ship is at General Quarters and Condition ZEBRA is set before the missile hit occurs. Blast, fragmentation, fire and smoke damage predictions are based on the use of computer models and engineering judgement. The actions described and the times indicated are based on effective decision making and execution by well trained personnel. Figure 555–8–1, Figure 555–8–2, Figure 555–8–3, and Figure 555–8–4 provide a ship's plan view of the mass conflagration and repair party response for time T=2 min., 8 min., 15 min., and 25 min., respectively. Figure 555–8–5, Figure 555–8–6, and Figure 555–8–7 provide summaries of repair party manning for the first 130 minutes.

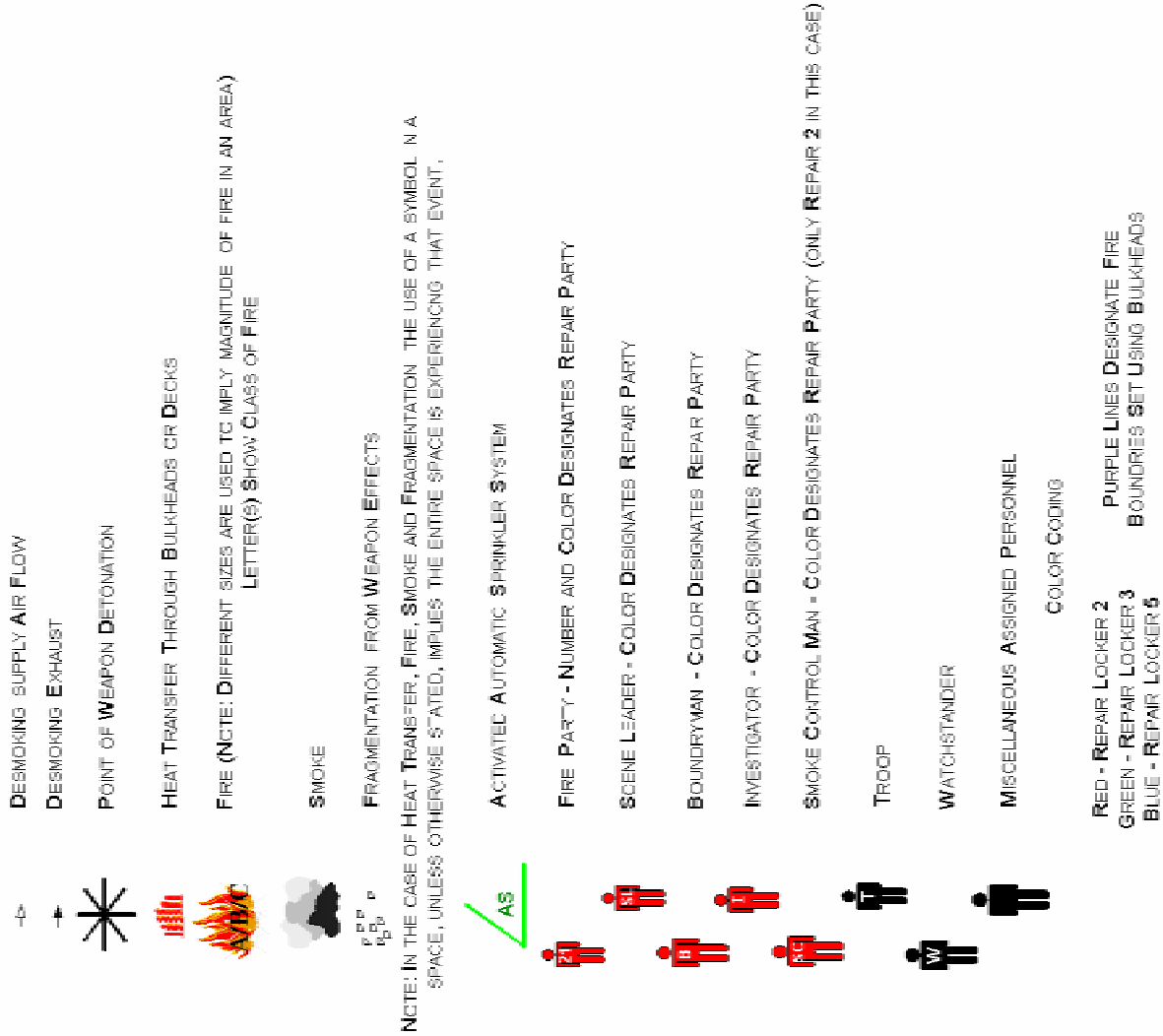

Figure 555-8-1 Mass Conflagration Plan View at T=2 min.

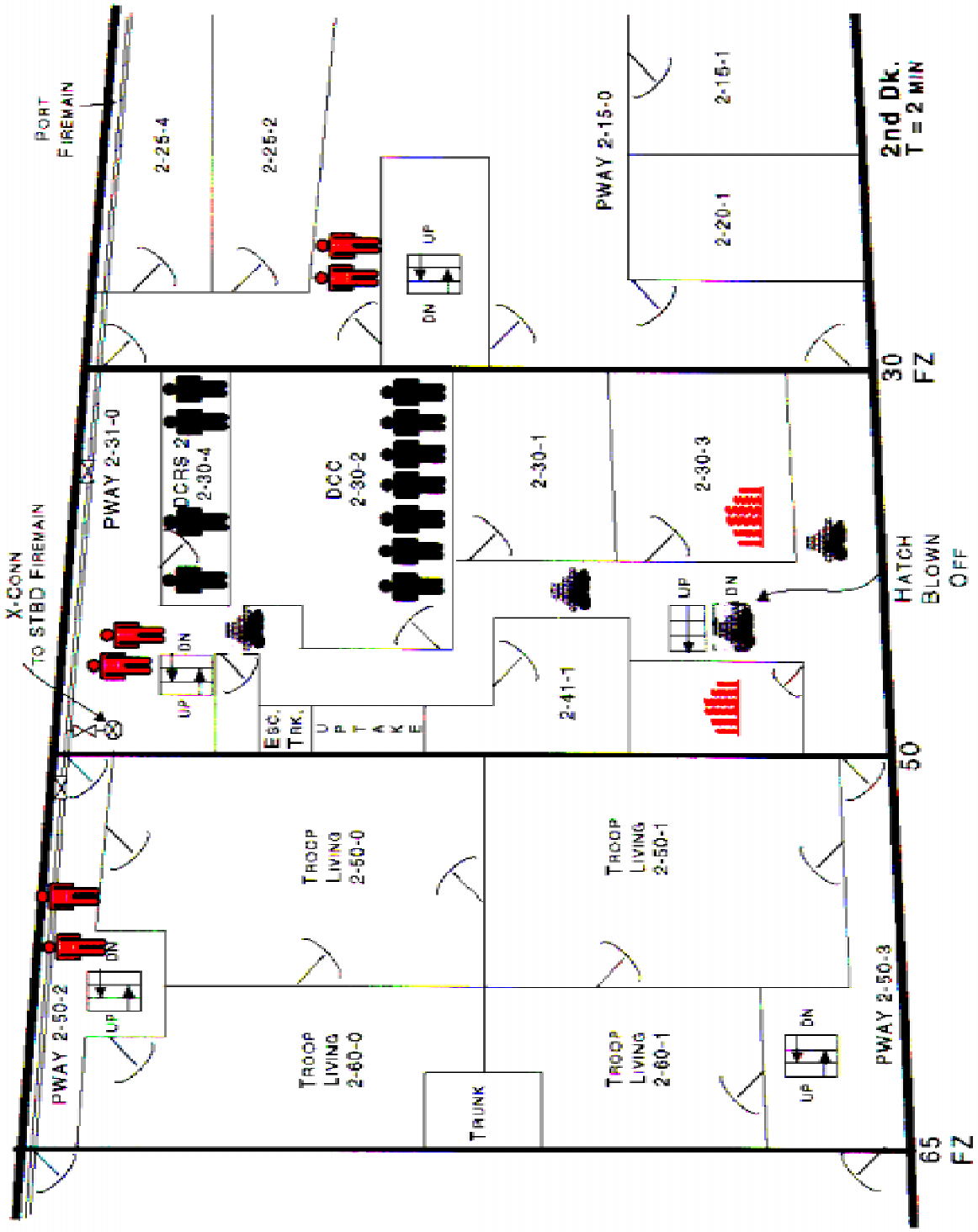

Figure 555-8-1 Mass Conflagration Plan View at T=2 min.

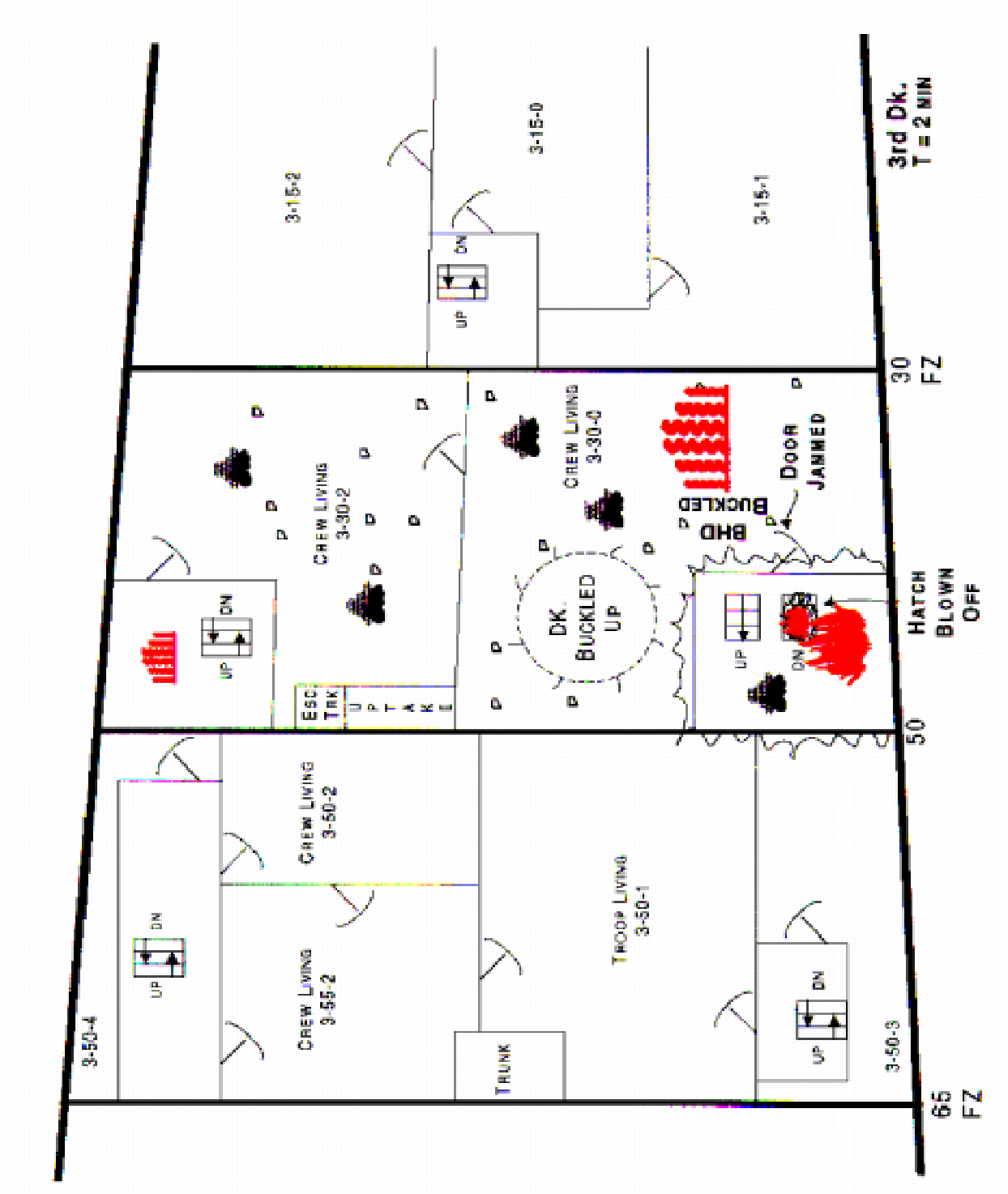

Figure 555-8-1 Mass Conflagration Plan View at T=2 min.

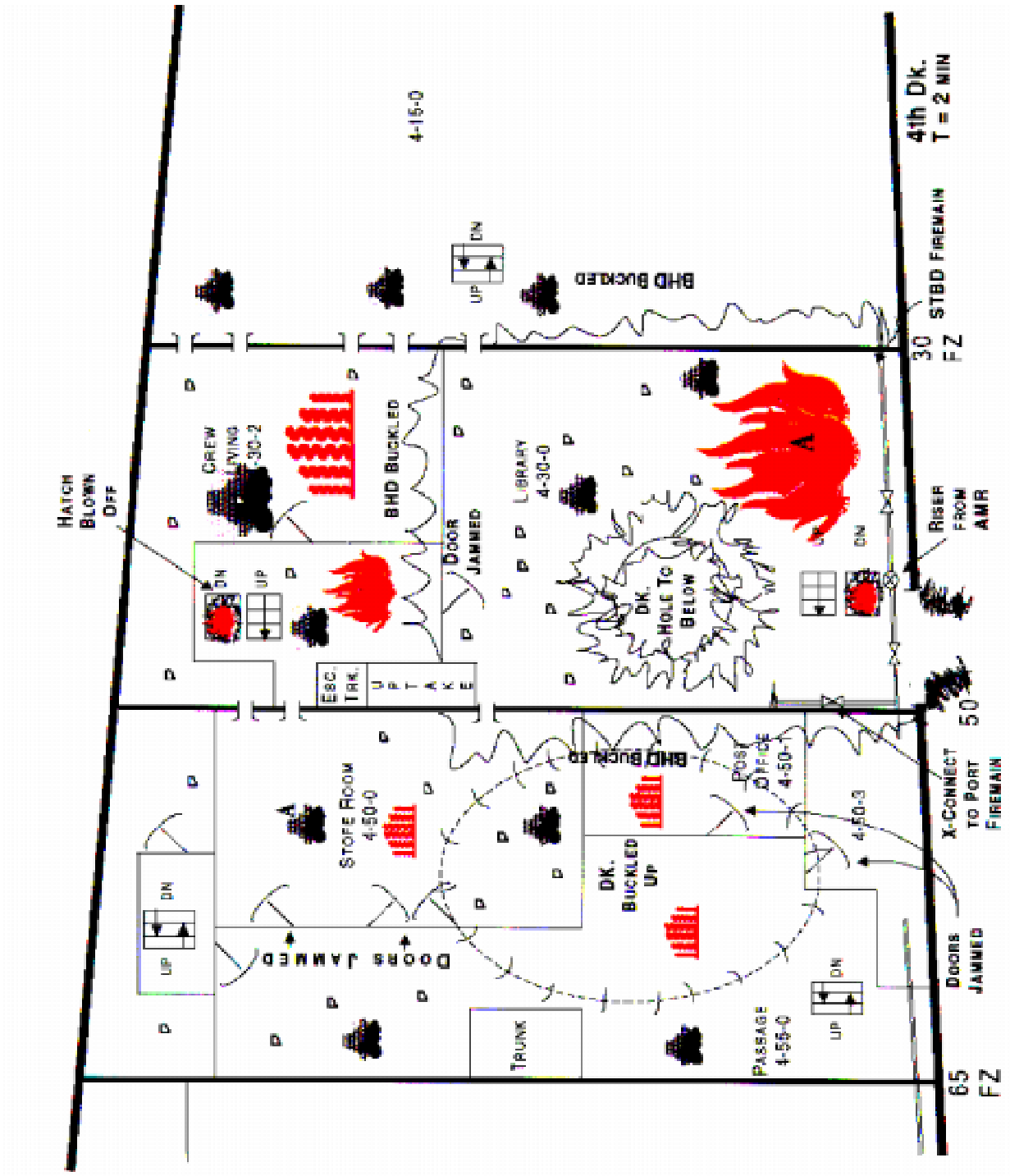

Figure 555-8-1 Mass Conflagration Plan View at T=2 min.

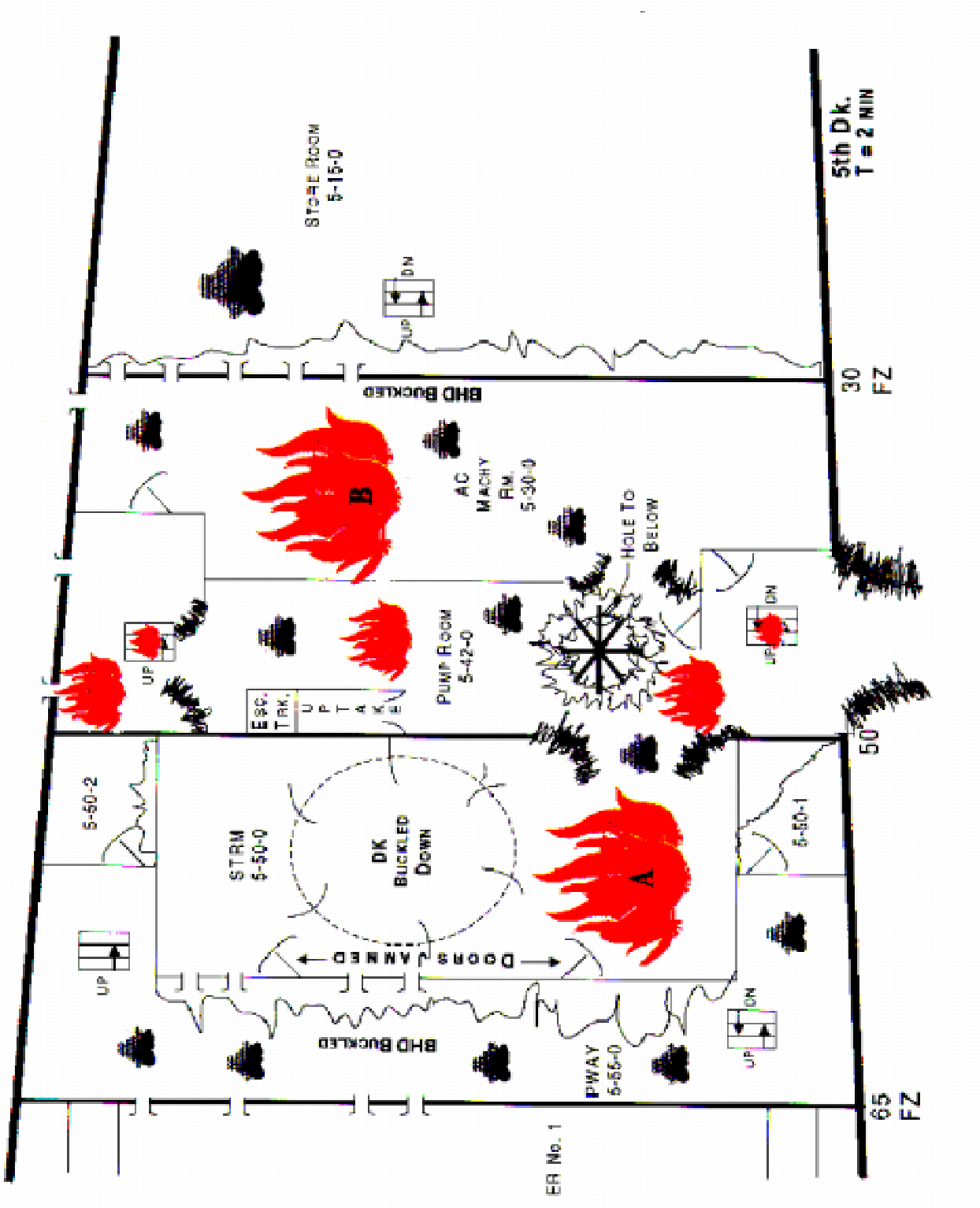

Figure 555-8-1 Mass Conflagration Plan View at T=2 min.

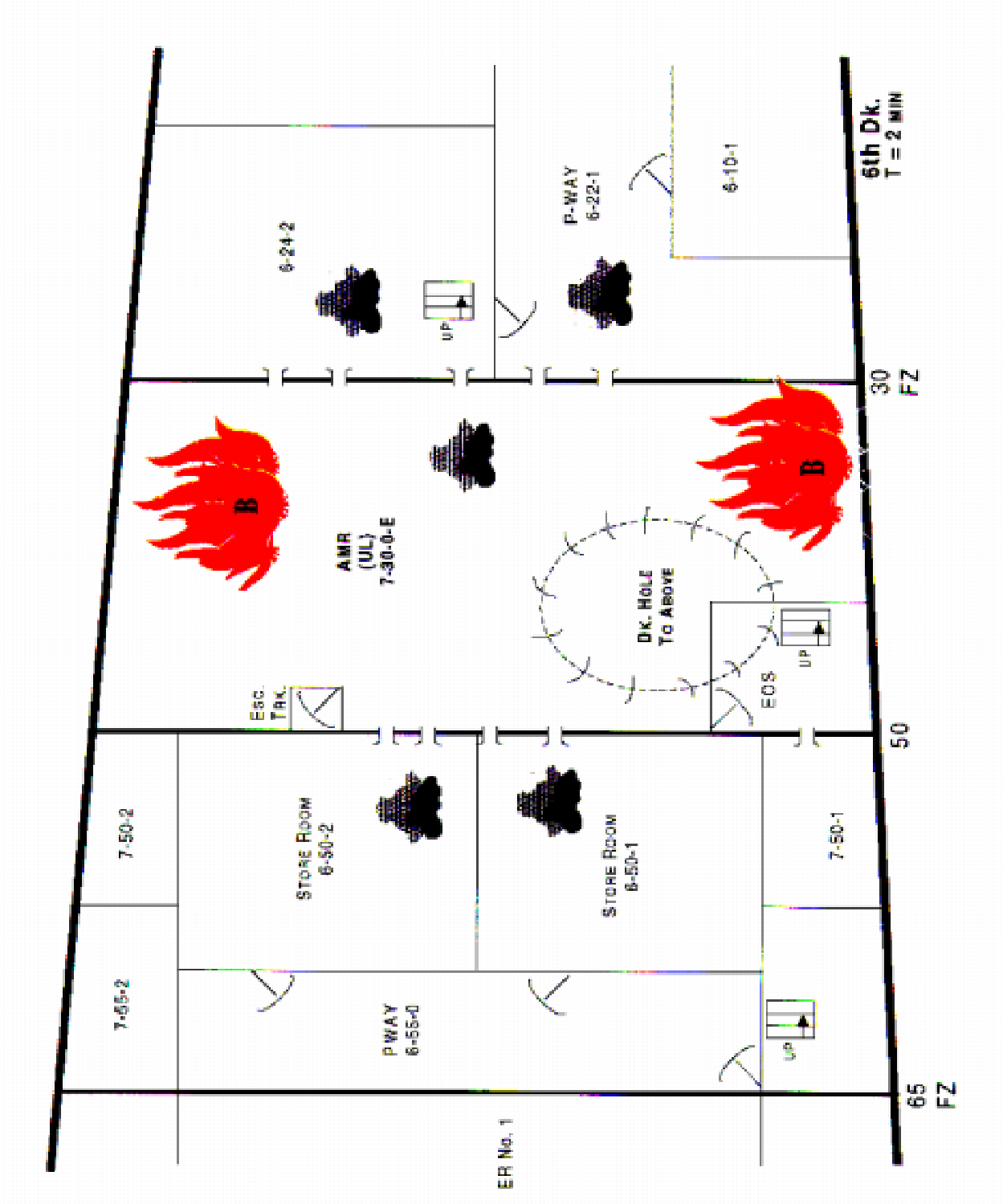

Figure 555-8-1 Mass Conflagration Plan View at T=2 min.

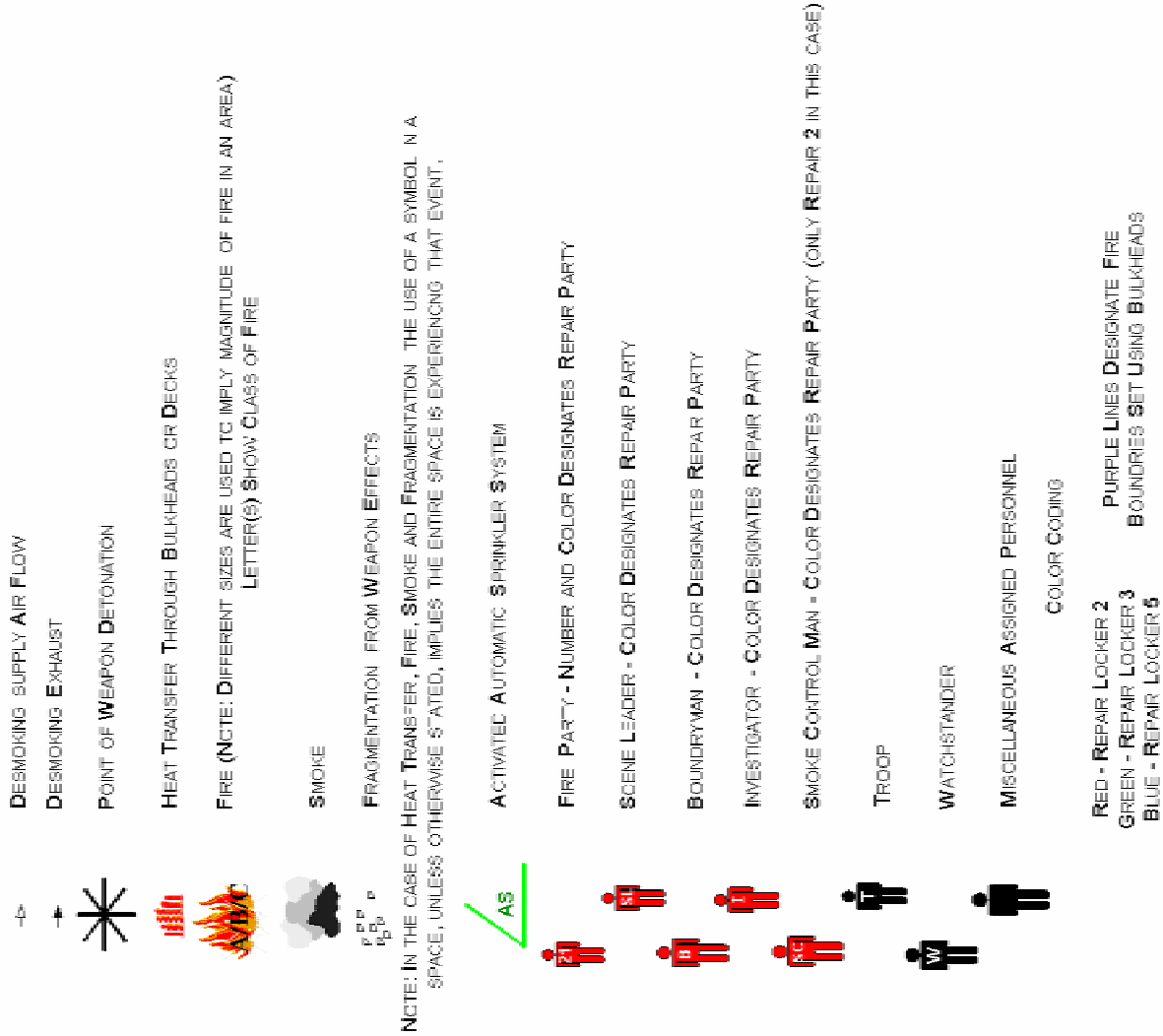

Figure 555-8-2 Mass Conflagration Plan View at T=8 min.

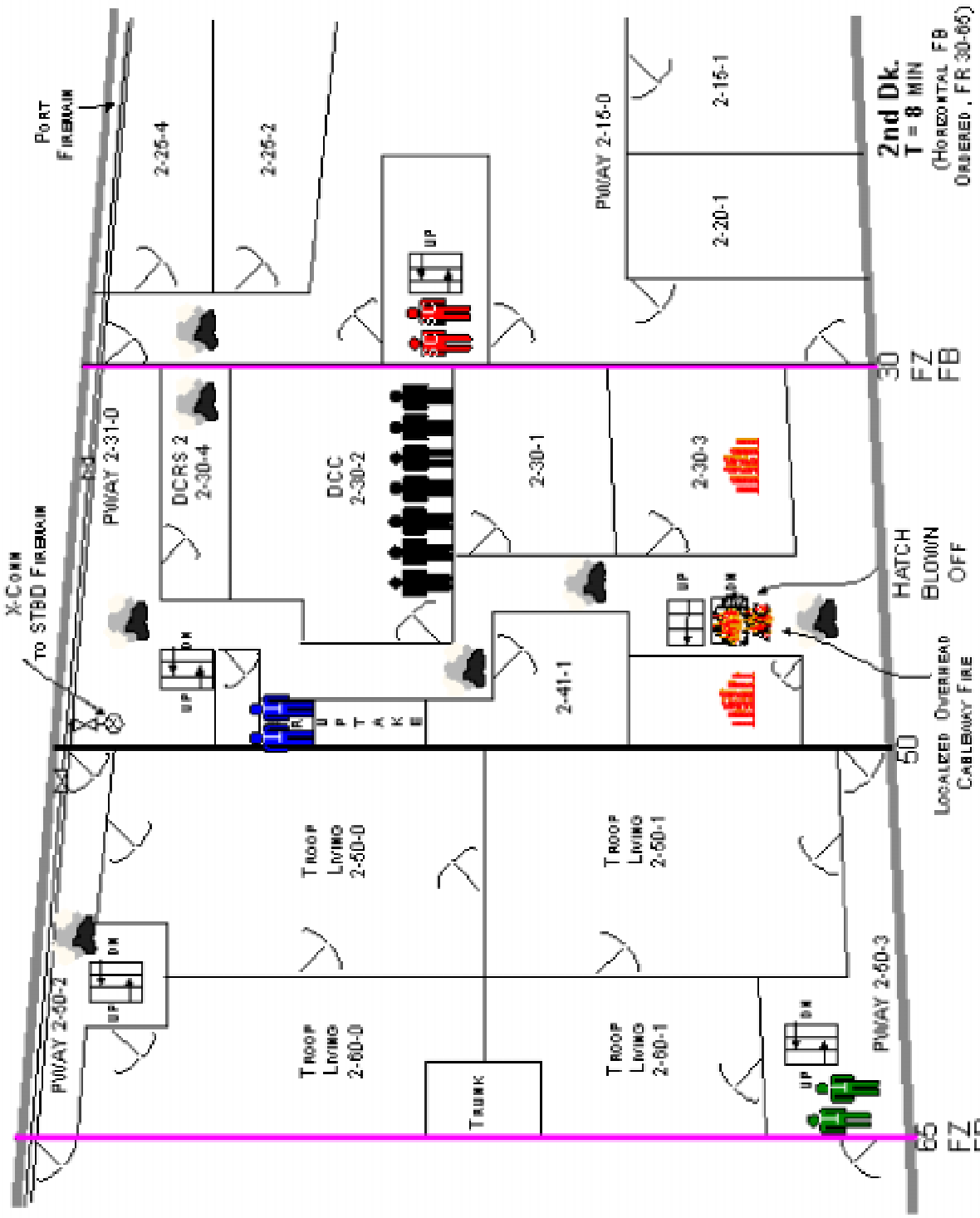

Figure 555-8-2 Mass Conflagration Plan View at T=8 min.

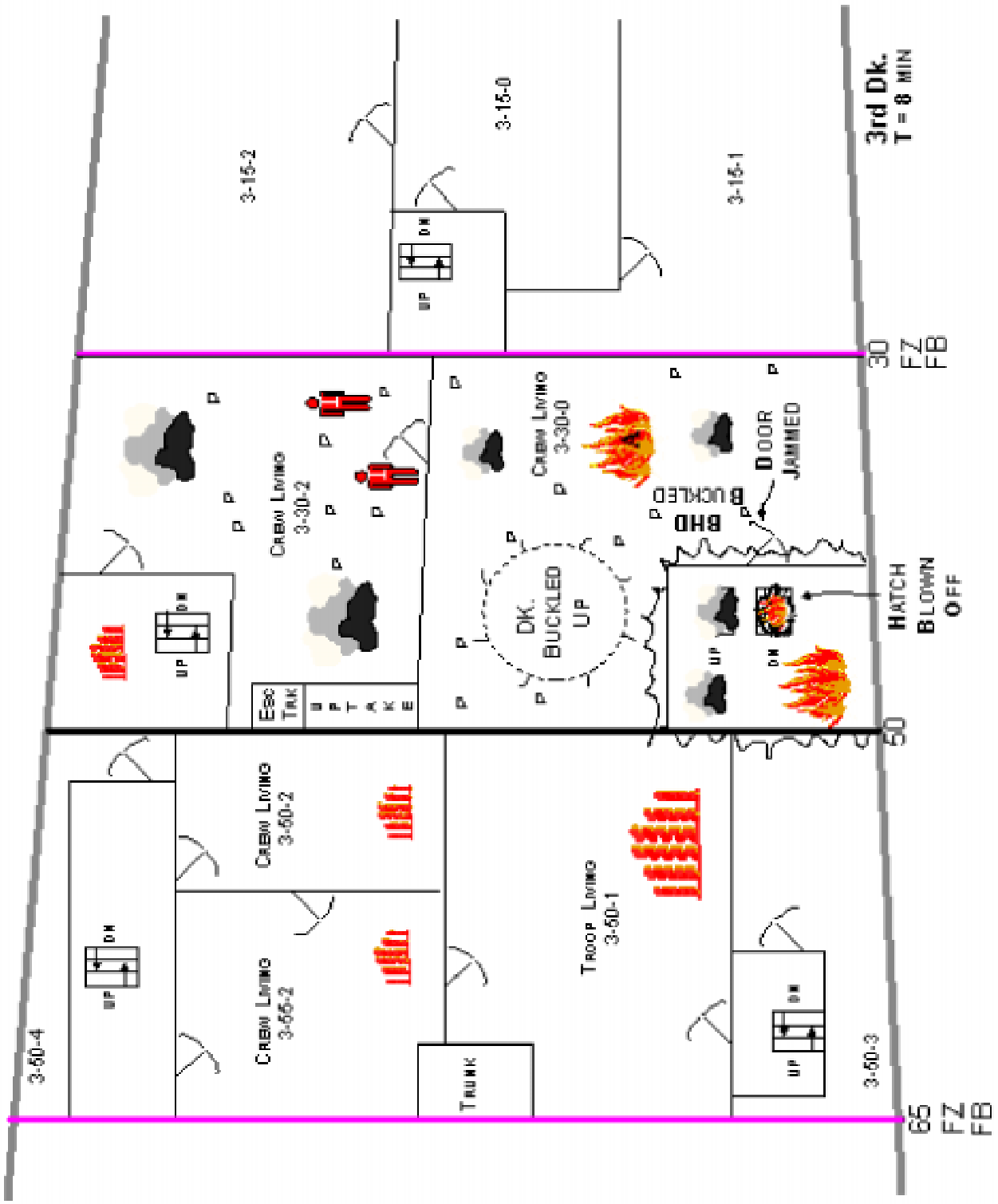

Figure 555-8-2 Mass Conflagration Plan View at T=8 min.

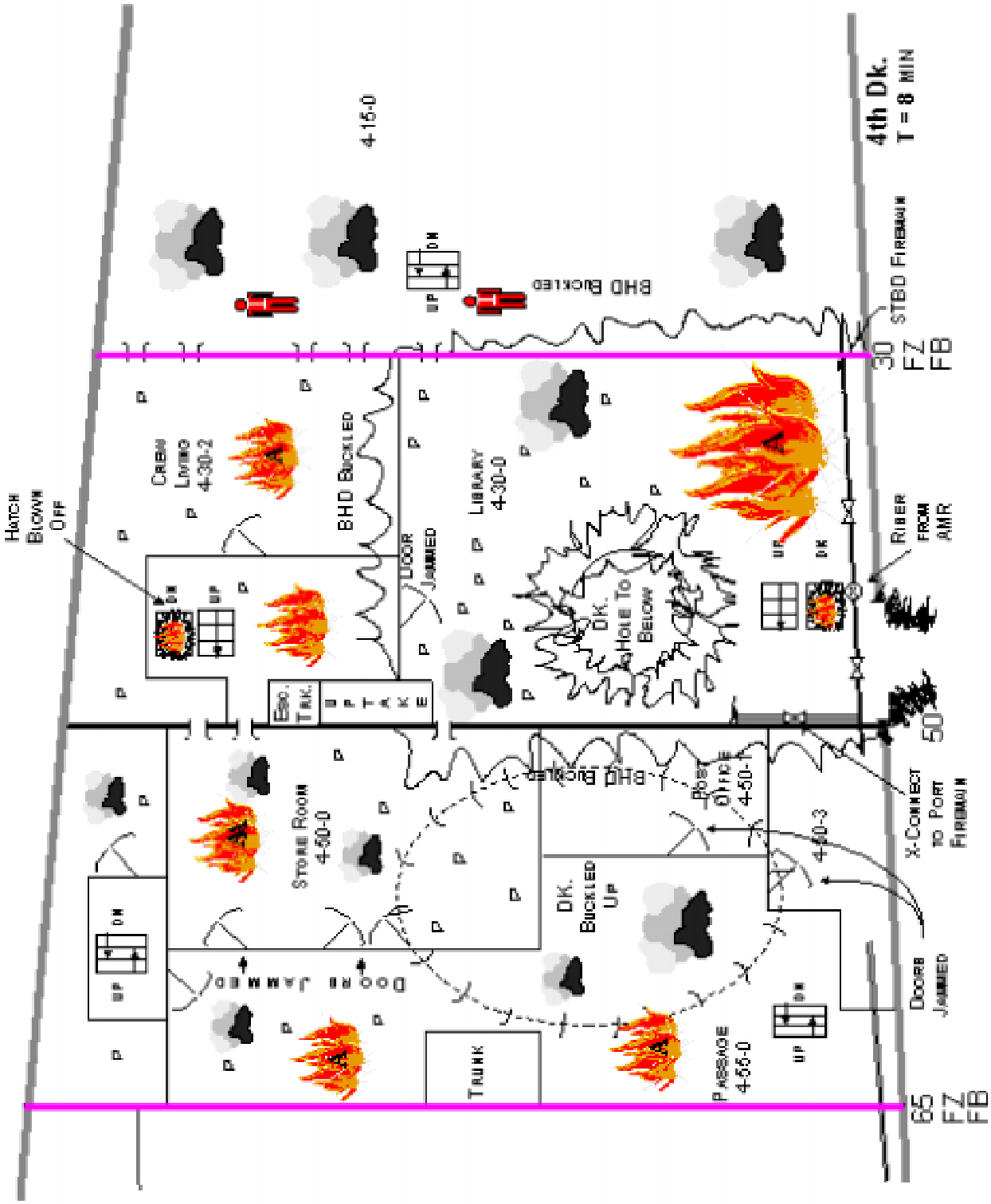

Figure 555-8-2 Mass Conflagration Plan View at T=8 min.

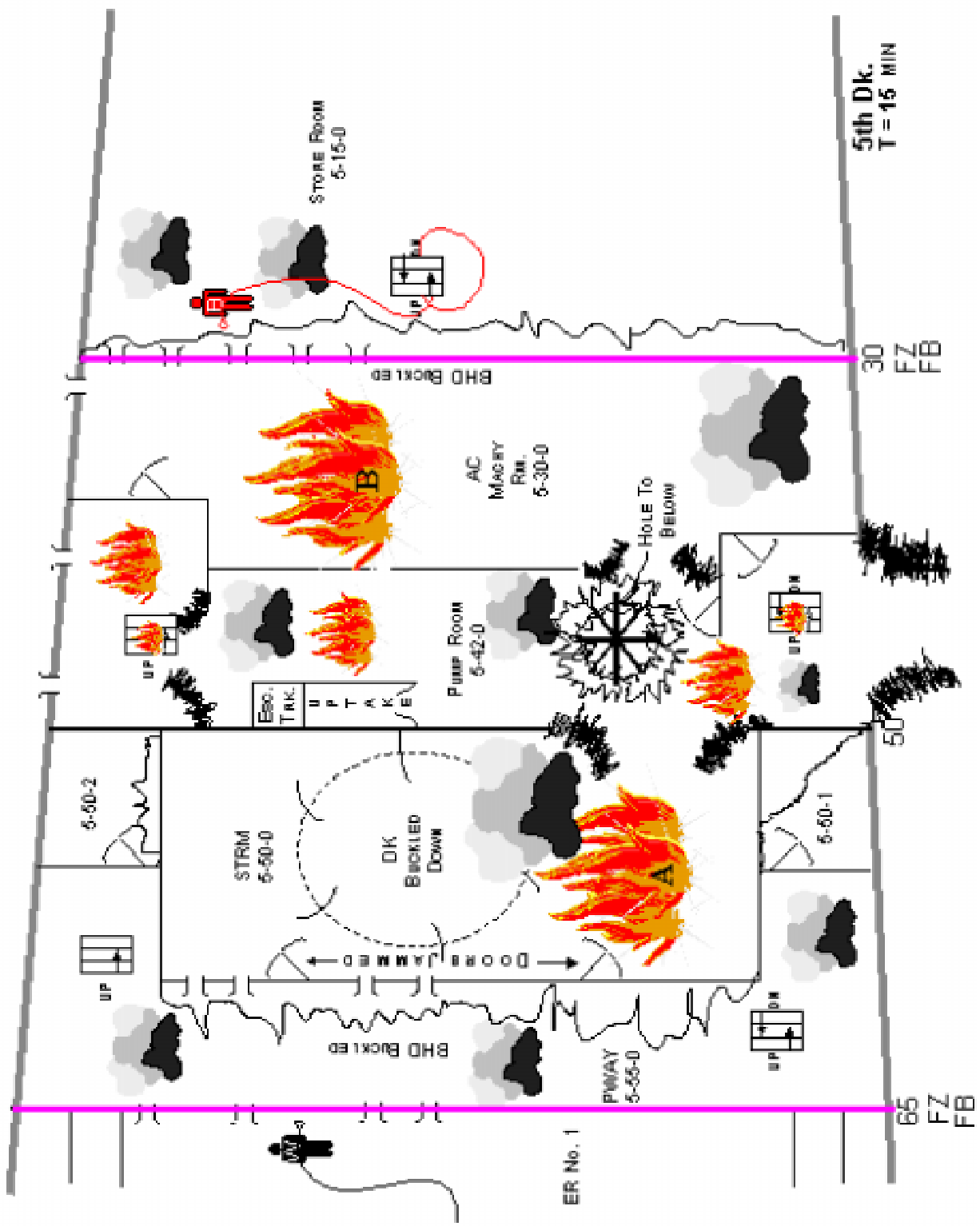

Figure 555-8-2 Mass Conflagration Plan View at T=8 min.

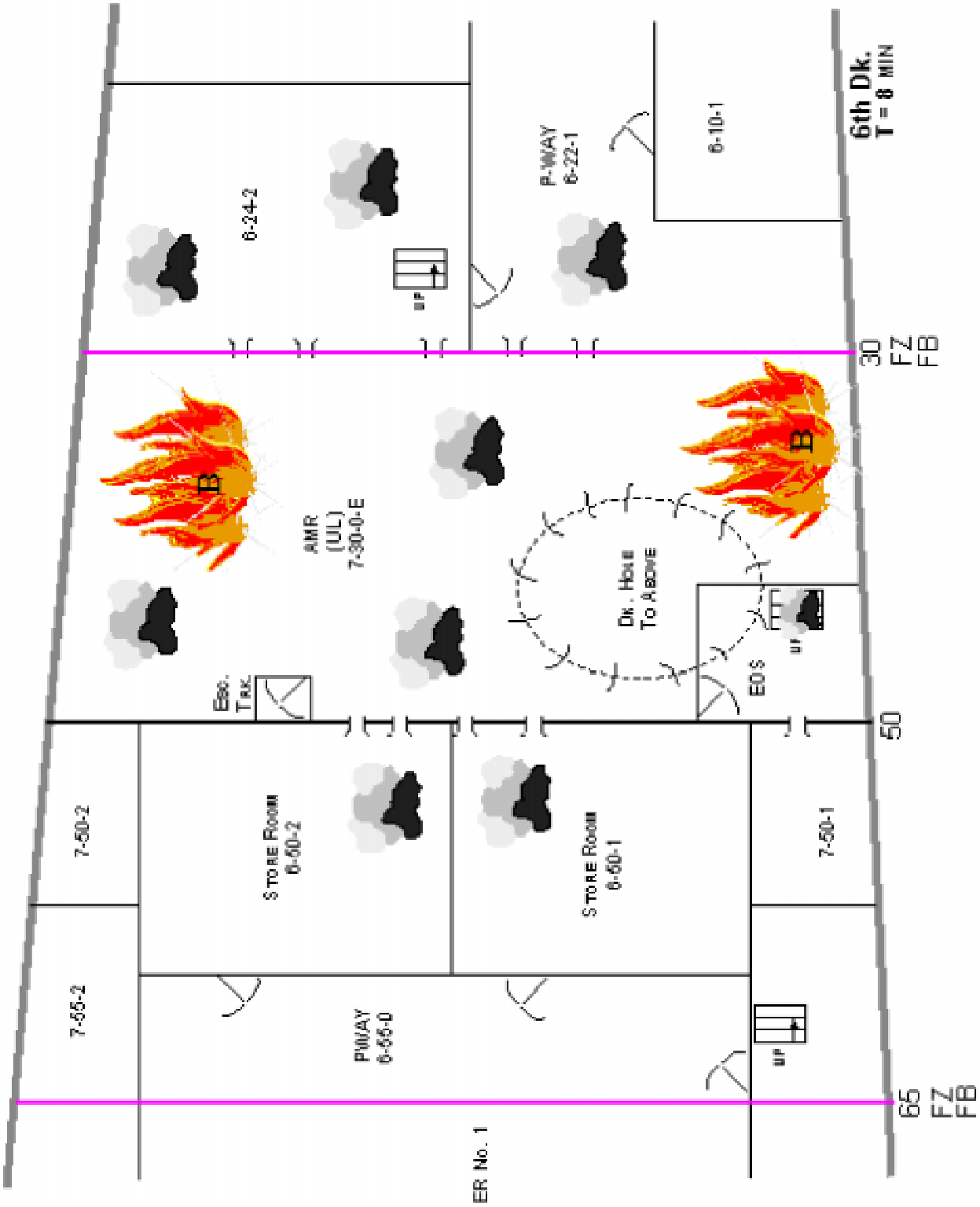

Figure 555-8-2 Mass Conflagration Plan View at T=8 min.

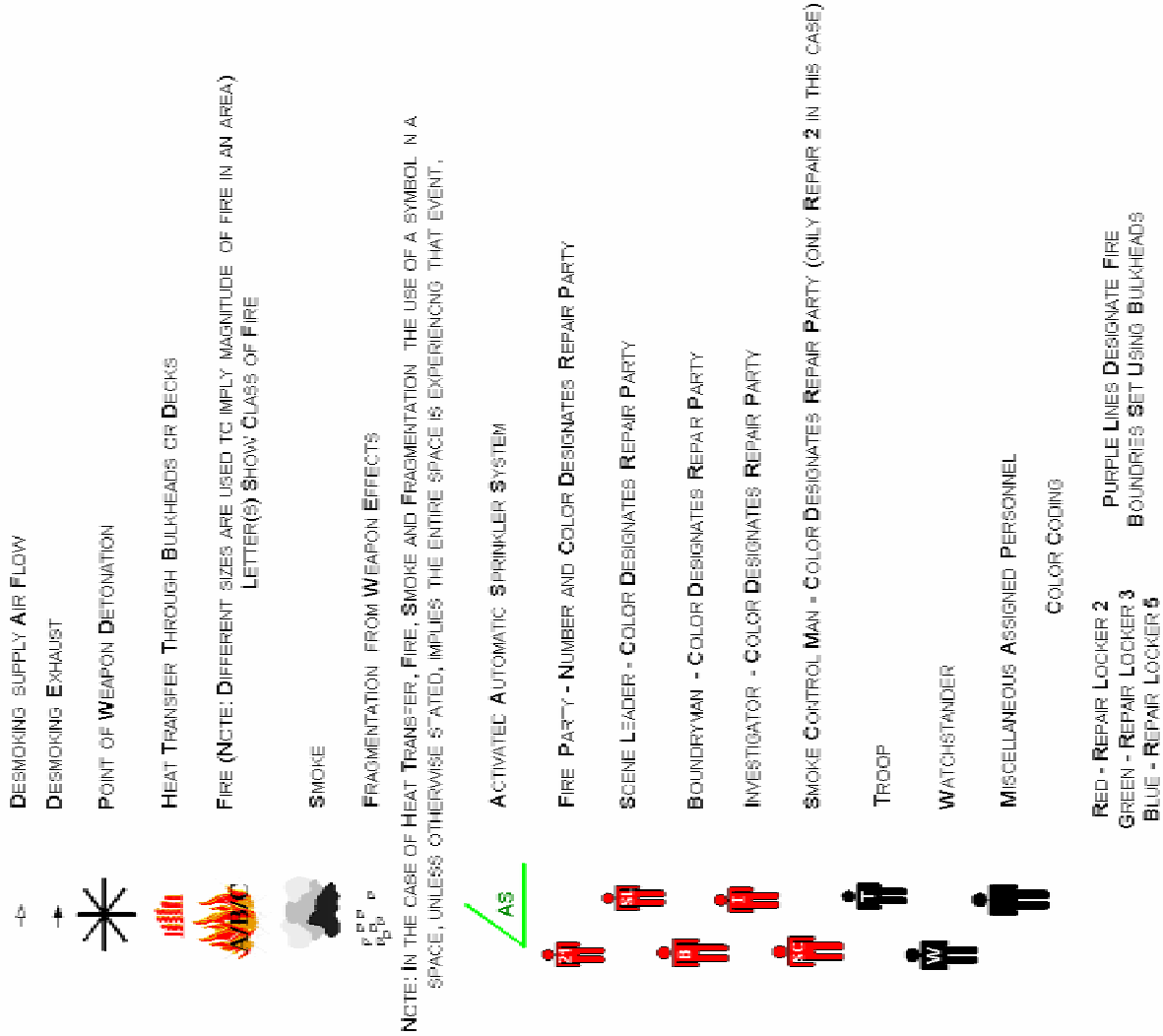

Figure 555-8-3 Mass Conflagration Plan View at T=15 min.

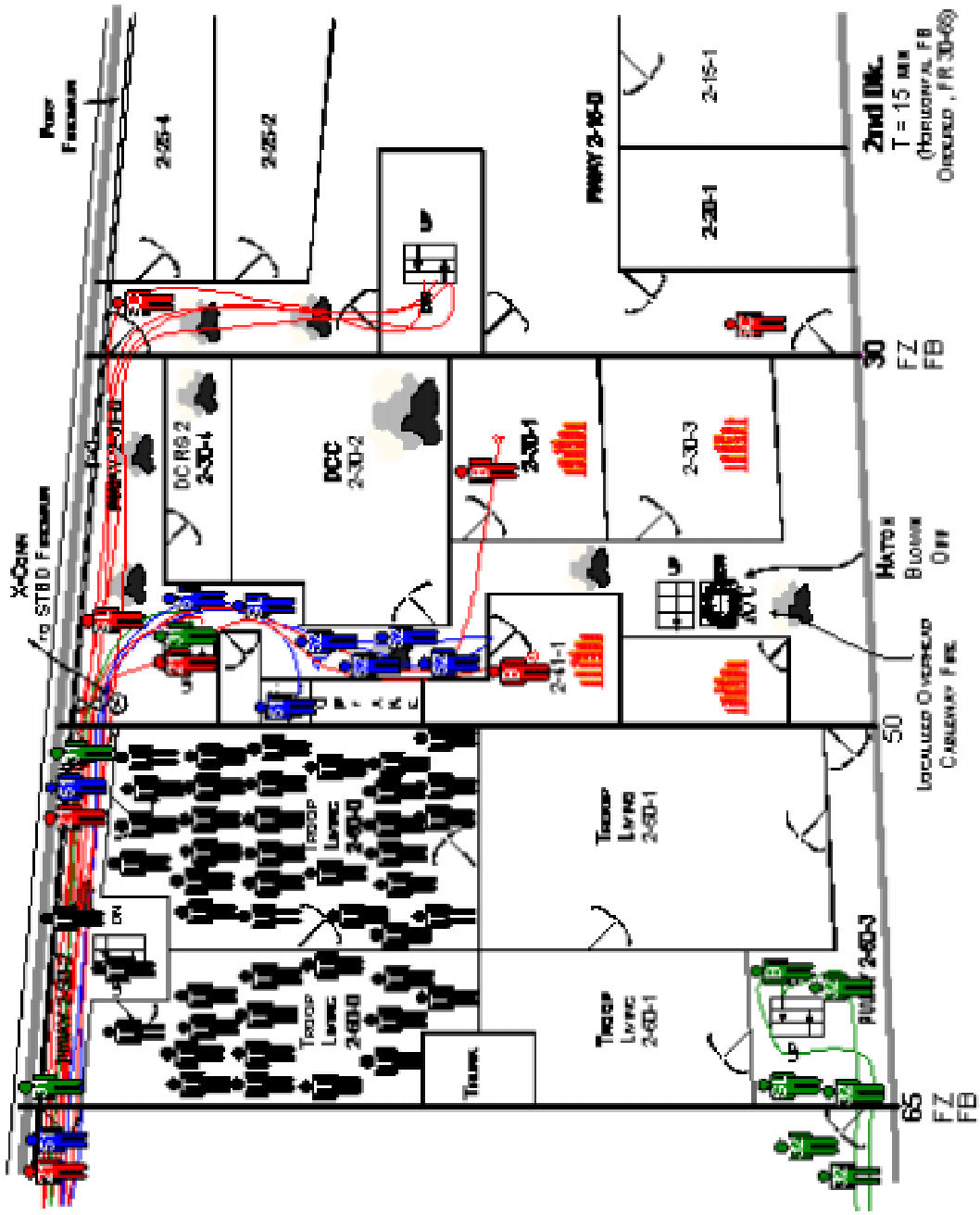

Figure 555-8-3 Mass Conflagration Plan View at T=15 min.

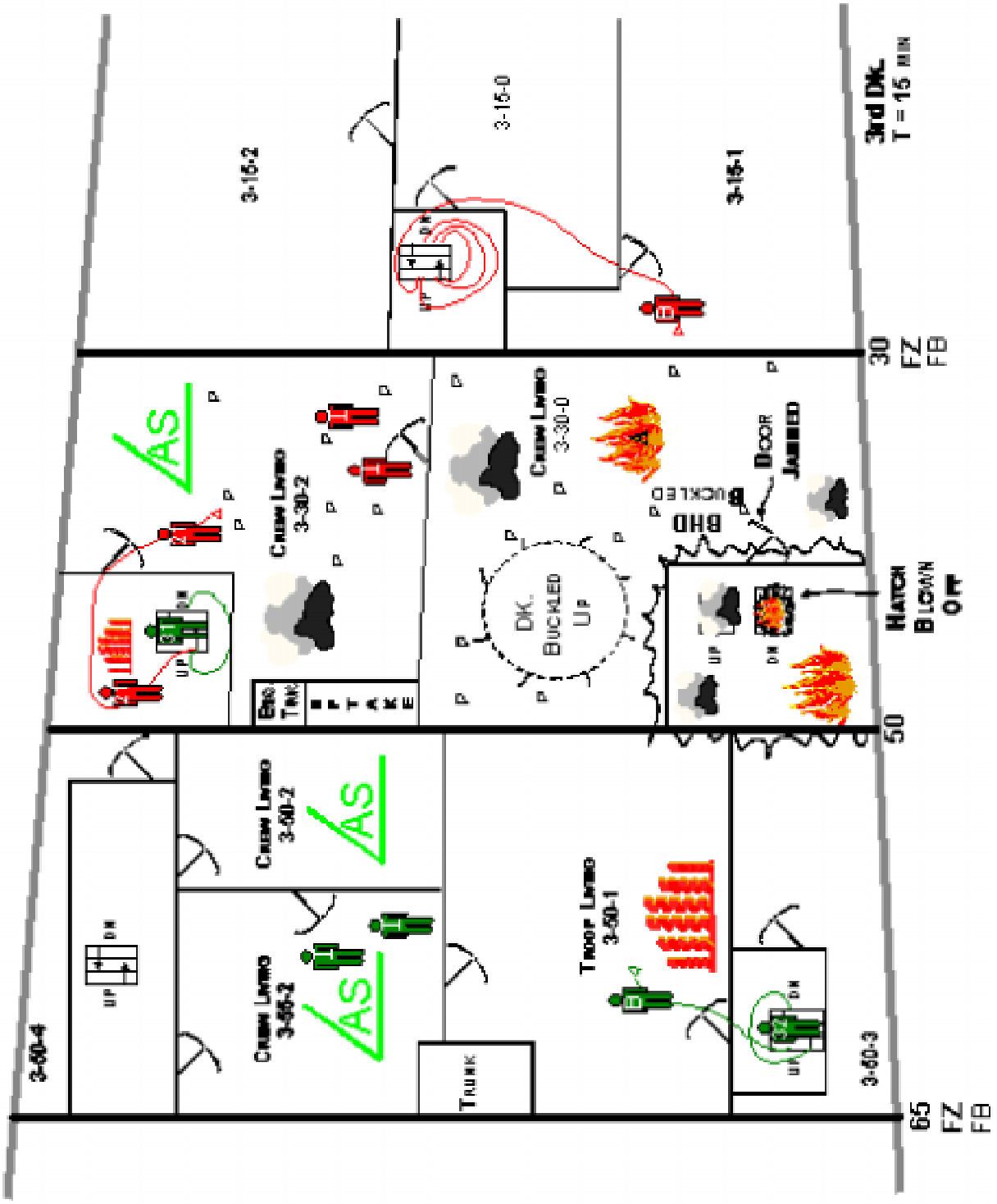

Figure 555-8-3 Mass Conflagration Plan View at T=15 min.

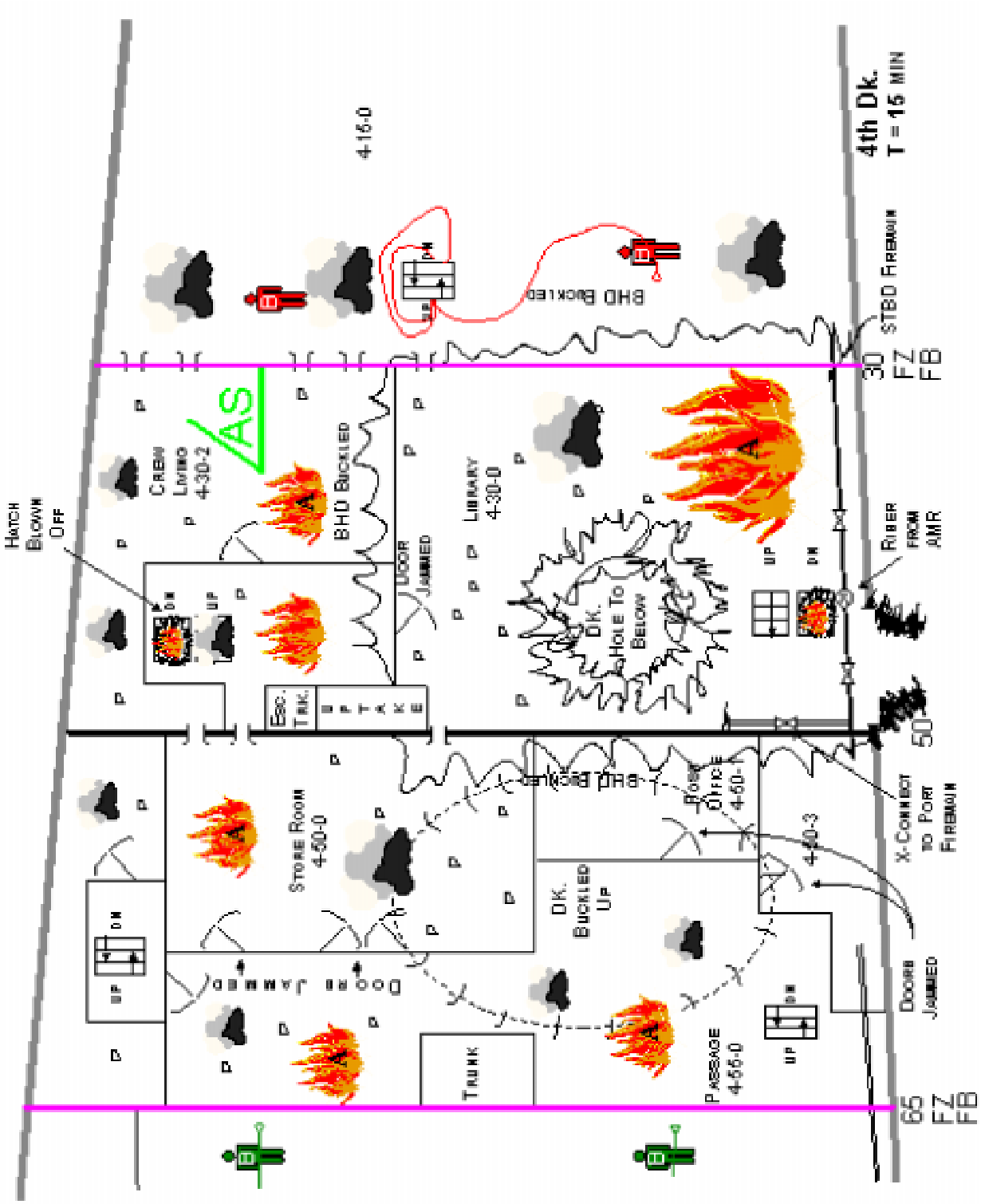

Figure 555-8-3 Mass Conflagration Plan View at T=15 min.

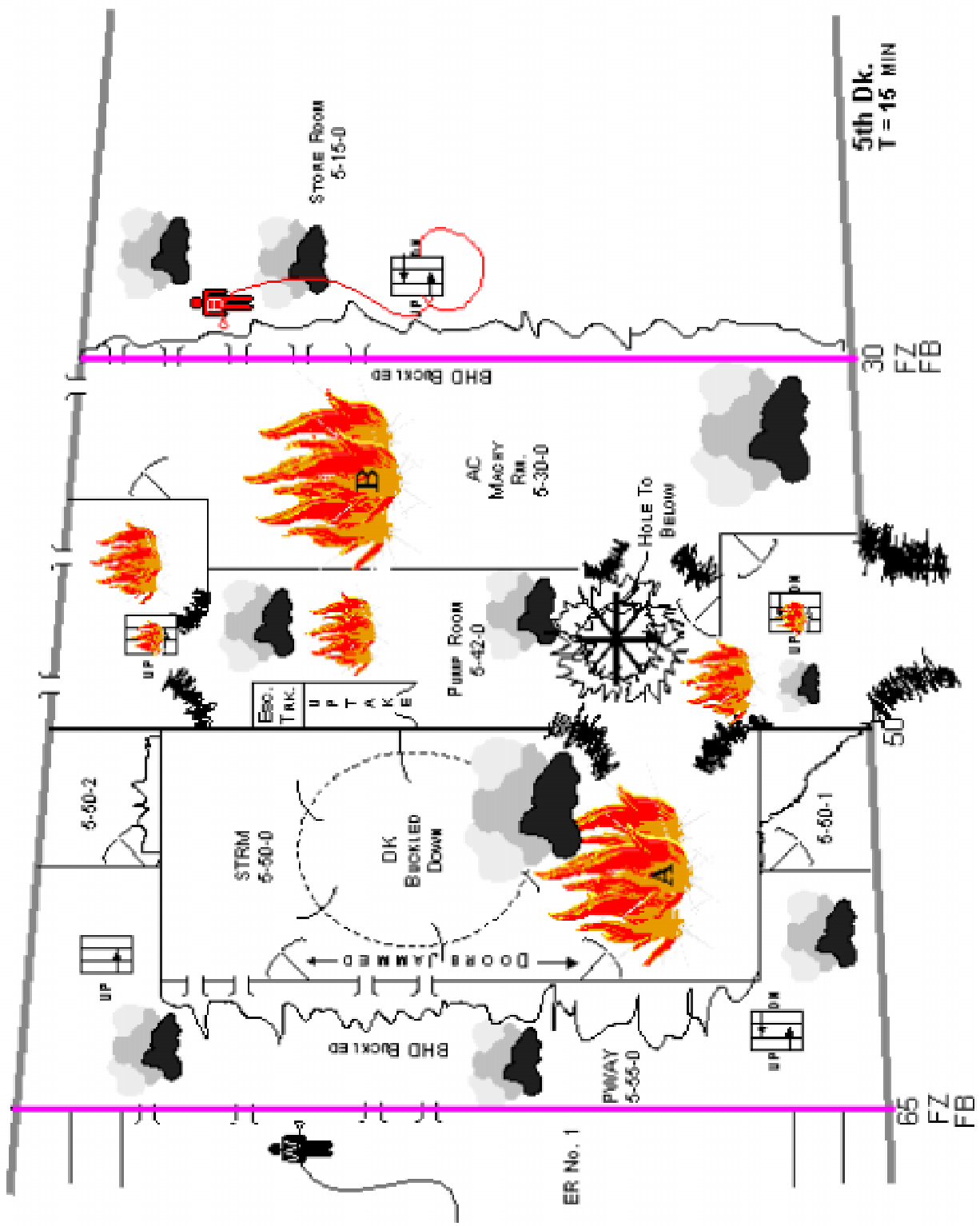

Figure 555-8-3 Mass Conflagration Plan View at T=15 min.

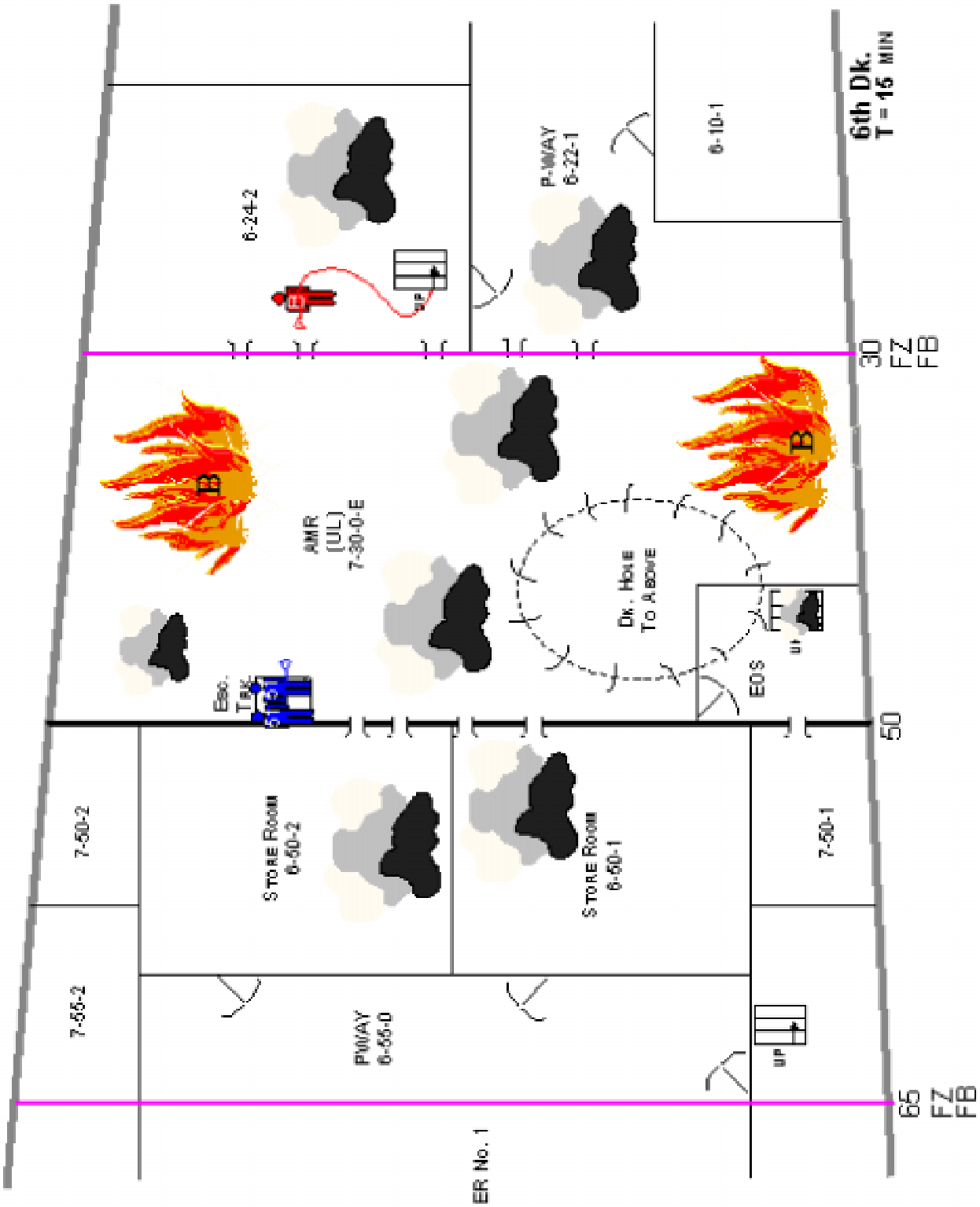

Figure 555-8-3 Mass Conflagration Plan View at T=15 min.

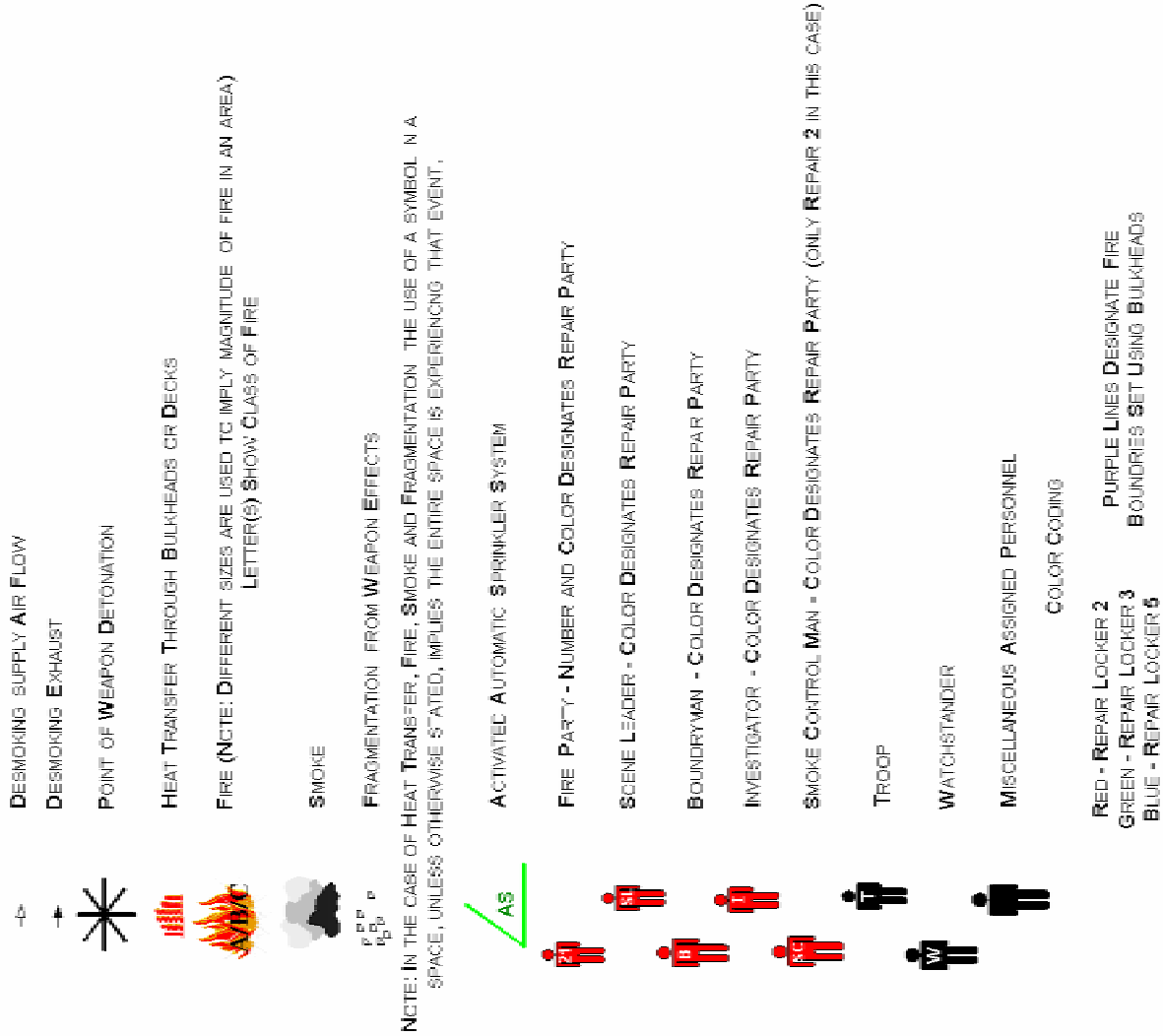

Figure 555-8-4 Mass Conflagration Plan View at T=25 min.

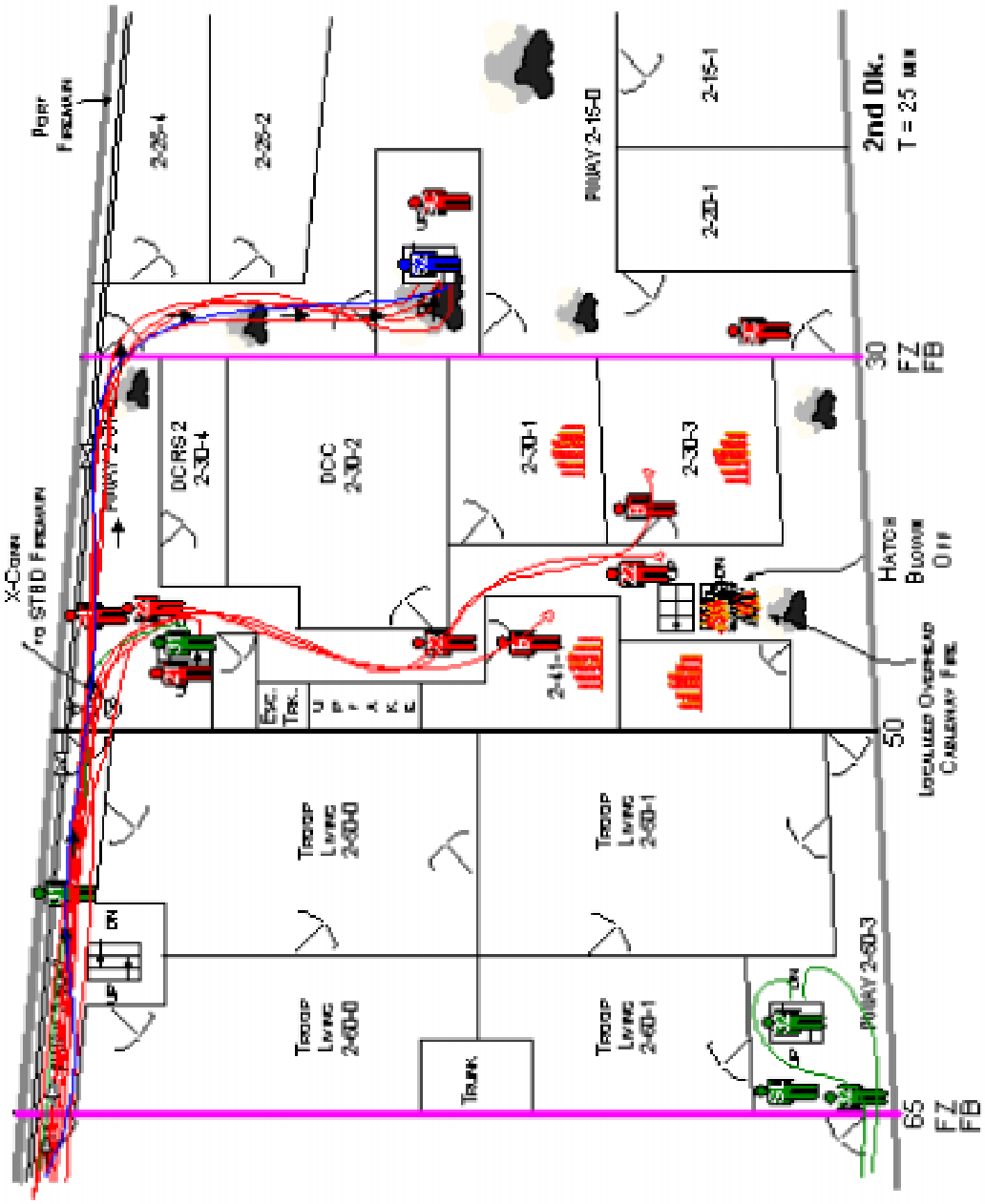

Figure 555-8-4 Mass Conflagration Plan View at T=25 min.

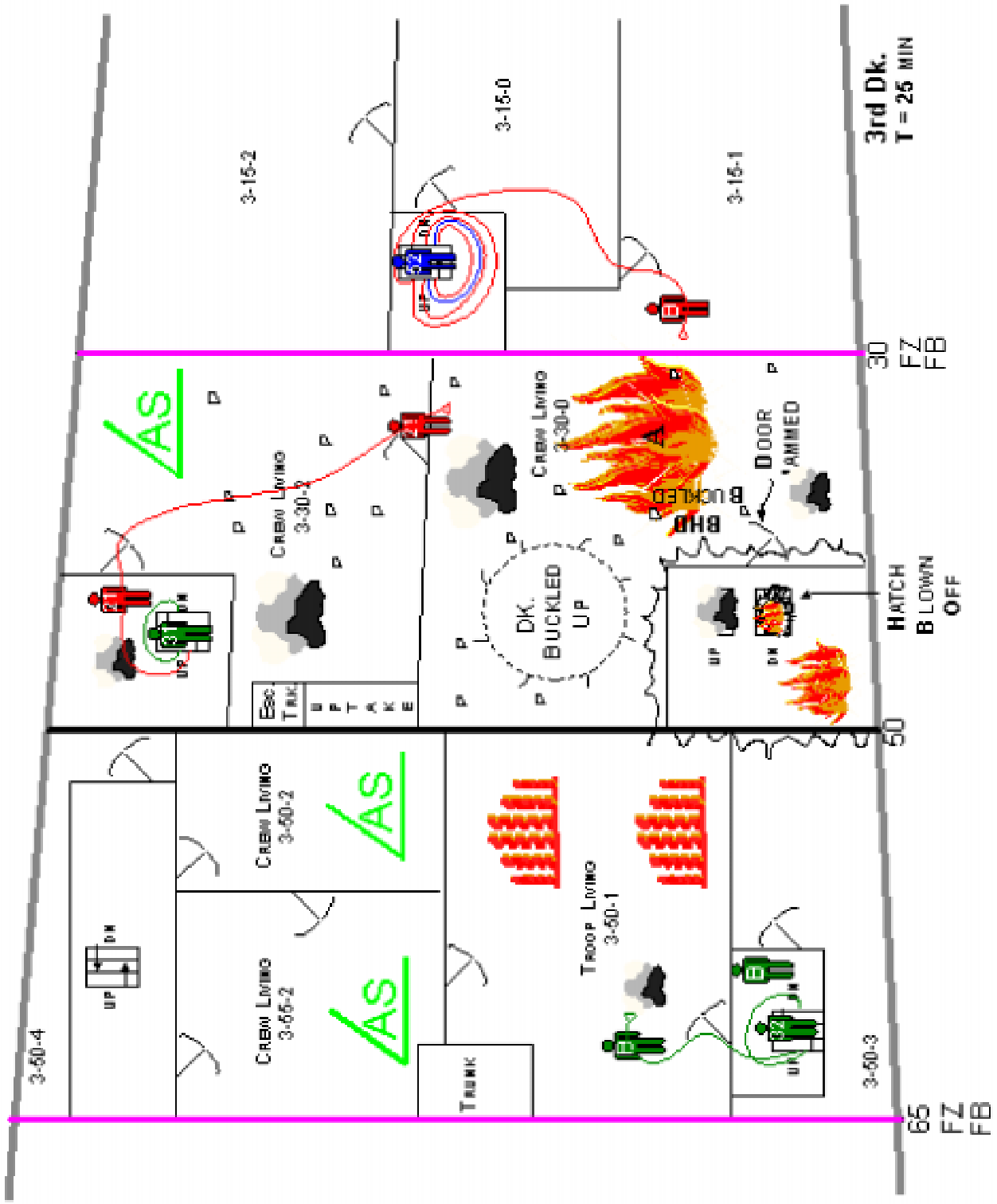

Figure 555-8-4 Mass Conflagration Plan View at T=25 min.

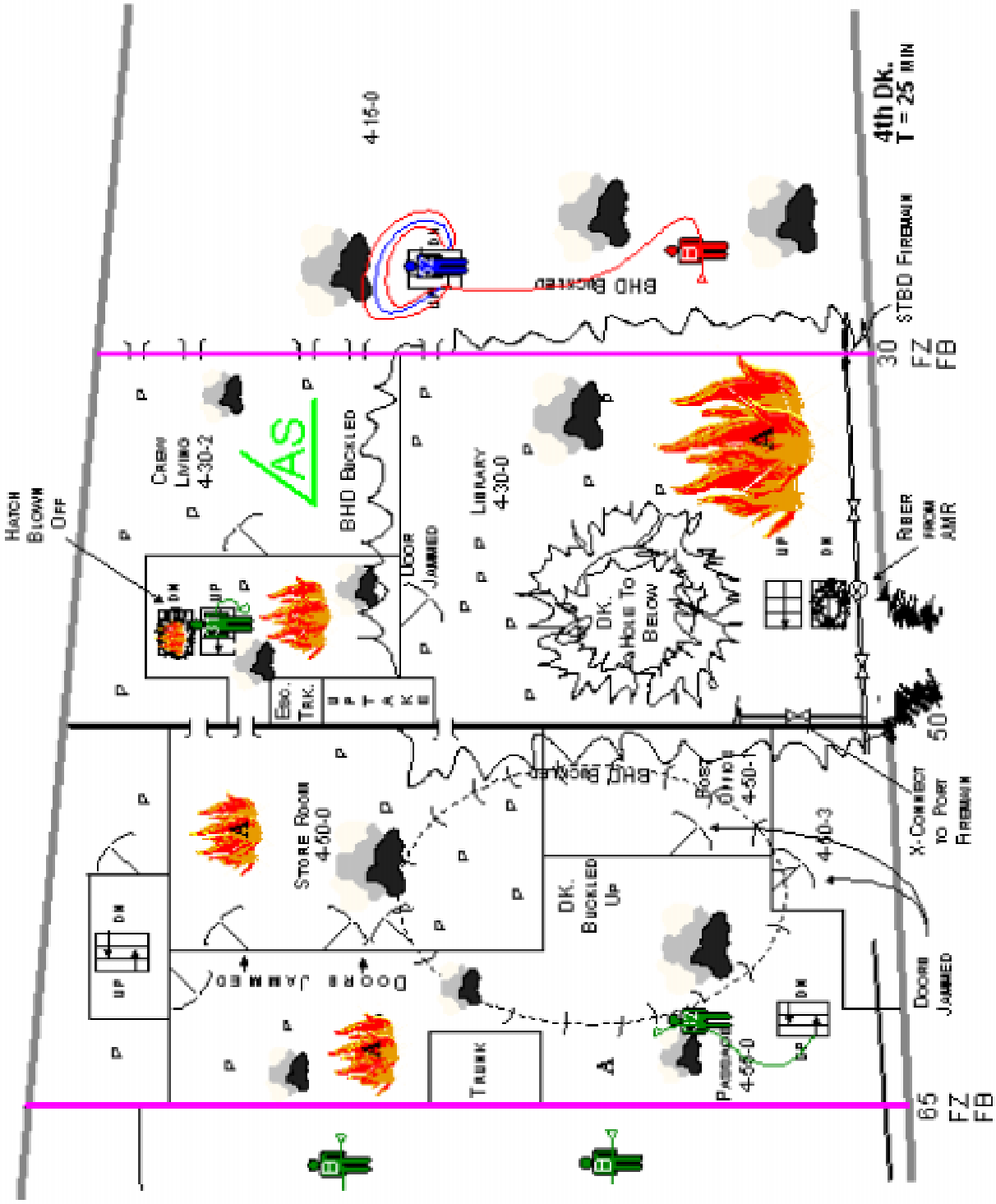

Figure 555-8-4 Mass Conflagration Plan View at T=25 min.

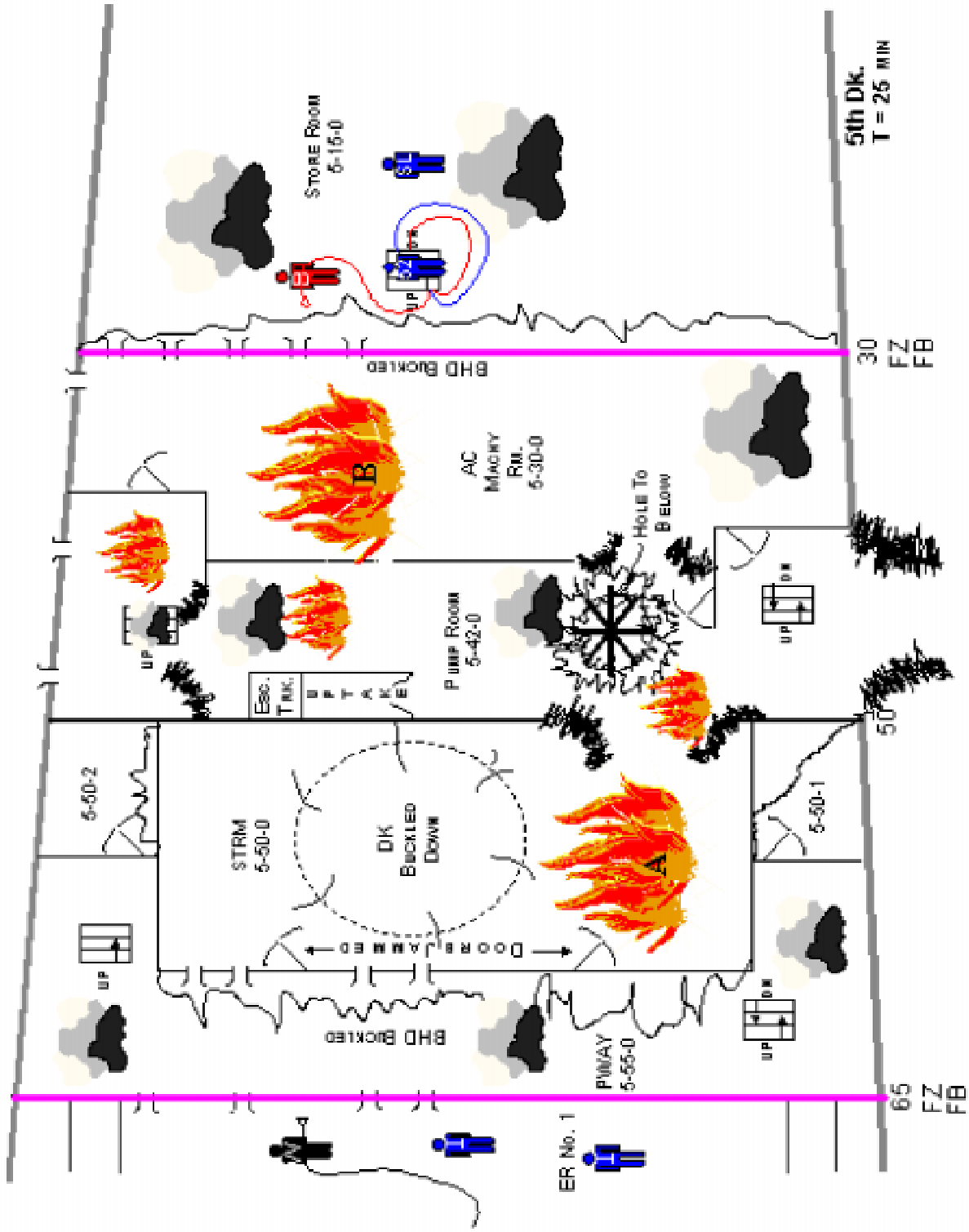

Figure 555-8-4 Mass Conflagration Plan View at T=25 min.

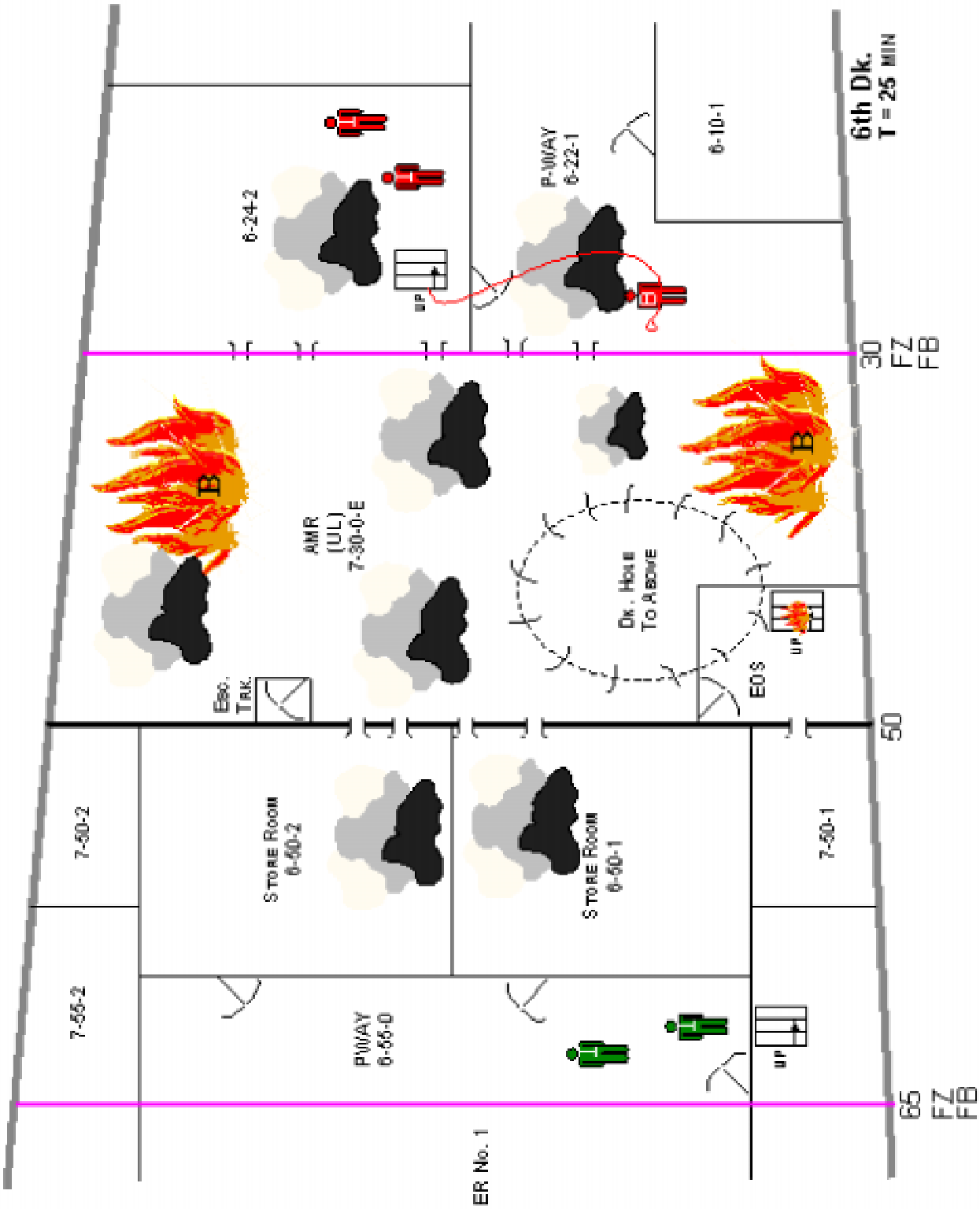

Figure 555-8-4 Mass Conflagration Plan View at T=25 min.

APPLICATIONS

DCA assigns 4 supplemental persons on request
DCA assigns 13 persons
DCA assigns 5 persons

Minutes >	0	2	4	6	8	10	12	14	16	18	20	22	24	26	28	30	32	34	36	38	40	42	44	46	48
Assigned to DCRS	4	4	4	4	4	4	4	4	4	4	4	4	4	4	4	4	4	4	4	4	4	4	4	4	4
Investigators																									
Fwd Frame 30		2	2	2	2	2	2	2	2	2	2	2	2	2	2	2	2	2	2	2	2	2	2	2	2
Frame 30-50		2	2	2	2	2	2	2	2	2	2	2	2	2	2	2	2	2	2	2	2	2	2	2	2
Frame 50-65		2	2	2																					
Electricians		2	2	2	2	2	2	2	2	2	2	2	2												
Smoke Control			2	2	2	2	2	2	2	2	2	2	2	2	2	2	2	2	2	2	2	2	2	2	2
Scene Leader 2				1	1	1	1	1	1	1	1	1	1	1	1	1	1	1	1	1	1	1	1	1	1
Attack Team 21-1					4	5	5	5	5	5	*5*	*5*	*5*	*5*	*5*	5	5	5	5	5	5	5	5	5	5
Attack Team 21-2											4	4	4	4	4	*4*	*4*	*4*	*4*	*4*	4	4	4	4	4
Attack Team 21-3																4	4	4	4	4	*4*	*4*	*4*	*4*	*4*
Attack Team 21-4																					4	4	4	4	4
Attack Team 21-5																									
Attack Team 22-1									4	4	4	4	4	*3*	*3*	*3*	*3*	*3*	3	3	3	3	3	3	3
Attack Team 22-2																3	3	3	*3*	*3*	*3*	*3*	*3*	*3*	*3*
Attack Team 22-3																								3	3
Fire Boundary					7	7	7	7	7	7	7	7	7	6	6	6	6	6	6	6	6	6	6	6	6
Personnel Assigned, Including Recuperation	4	12	14	15	24	25	25	25	29	29	33	33	33	29	29	36	36	36	36	36	40	40	40	43	43
Personnel Available	21	13	11	10	1	0	4	4	13	13	9	9	9	13	13	6	6	11	11	11	7	7	7	4	4
Total Personnel	25	25	25	25	25	25	29	29	42	42	42	42	42	42	42	42	42	47	47	47	47	47	47	47	47

Legend: 1 = Transit to Scene; *1* = Firefighting; 1 = Relieved, Transit to Recuperate; 1 = Recuperating; 1 = Available

APPLICATIONS

Figure 555-8-5 Summary of Repair Party 2 Manning (Sheet 1 of 3)

APPLICATIONS

Minutes >	50	52	54	56	58	60	62	64	66	68	70	72	74	76	78	80	82	84	86	88	90	92	94	96	98
Assigned to DCRS	4	4	4	4	4	4	4	4	4	4	4	4	4	4	4	4	4	4	4	4	4	4	4	4	4
Investigators																									
Fwd Frame 30	2	2	2	2	2	2	2	2	2	2	2	2	2	2	2	2	2	2	2	2	2	2	2	2	2
Frame 30-50	2	2	2	2	2	2	2	2	2	2	2	2	2	2	2	2	2	2	2	2	2	2	2	2	2
Frame 50-65																									
Electricians																									
Smoke Control	2	2	2	2	2	2	2	2	2	2	2	2	2	2	2	2	2	2	2	2	2	2	2	2	2
Scene Leader 2	1	1	1	1	1	1	1	1	1	1	1	1	1	1	1	1	1	1	1	1	1	1	1	1	1
Attack Team 21-1	5	5	5	5	5	4	4	4	4	4	4	4	4	4	4	4	4	4	4	4	4	4	4	4	4
Attack Team 21-2	4	4	4	4	4	4	4	4	4	4	4	4	4	4	4	4	4	4	4	4	4	4	4	4	4
Attack Team 21-3	4	4	4	4	4	4	4	4	4	4	4	4	4	4	4	4	4	4	4	4	4	4	4	4	4
Attack Team 21-4	4	4	4	4	4	4	4	4	4	4	4	4	4	4	4	4	4	4	4	4	4	4	4	4	4
Attack Team 21-5	4	4	4	4	4	4	4	4	4	4	4	4	4	4	4	4	4	4	4	4	4	4	4	4	4
Attack Team 22-1	3	3	3	3	3	3	3	3	3	3	3	3	3	3	3	3	3	3	3	3	3	3	3	3	3
Attack Team 22-2	3	3	3	3	3	3	3	3	3	3	3	3	3	3	3	3	3	3	3	3	3	3	3	3	3
Attack Team 22-3	3	3	3	3	3	3	3	3	3	3	3	3	3	3	3	3	3	3	3	3	3	3	3	3	3
Fire Boundary	6	6	6	6	6	6	6	6	6	6	6	6	6	6	6	6	6	6	6	6	6	6	6	6	6
Personnel Assigned, Including Recuperation	47	47	47	47	47	42	42	42	46	46	39	39	43	46	46	42	42	46	46	46	42	42	46	46	46
Personnel Available	0	0	0	0	0	5	5	5	1	1	8	8	4	1	1	5	5	1	1	1	5	5	1	1	1
Total Personnel	47	47	47	47	47	47	47	47	47	47	47	47	47	47	47	47	47	47	47	47	47	47	47	47	47

Legend: 1 = Transit to Scene; 1 = Firefighting; 1 = Relieved, Transit to Recuperate; 1 = Recuperating; 1 = Available

Figure 555-8-5 Summary of Repair Party 2 Manning (Sheet 2 of 3)

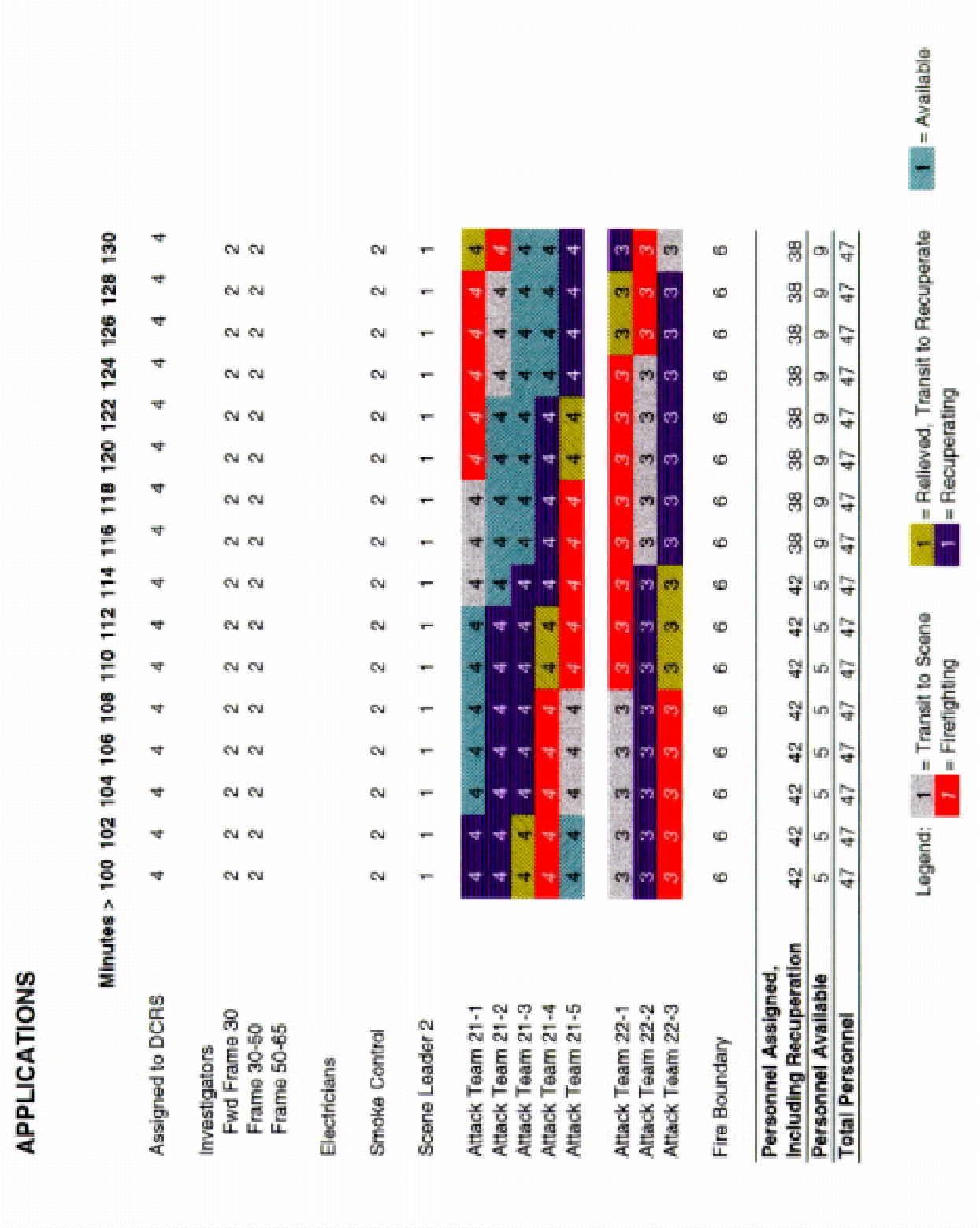

APPLICATIONS

Minutes >	100	102	104	106	108	110	112	114	116	118	120	122	124	126	128	130
Assigned to DCRS	4	4	4	4	4	4	4	4	4	4	4	4	4	4	4	4
Investigators																
Fwd Frame 30	2	2	2	2	2	2	2	2	2	2	2	2	2	2	2	2
Frame 30-50	2	2	2	2	2	2	2	2	2	2	2	2	2	2	2	2
Frame 50-65																
Electricians																
Smoke Control	2	2	2	2	2	2	2	2	2	2	2	2	2	2	2	2
Scene Leader 2	1	1	1	1	1	1	1	1	1	1	1	1	1	1	1	1
Attack Team 21-1	4	4	4	4	4	4	4	4	4	4	4	4	4	4	4	4
Attack Team 21-2	4	4	4	4	4	4	4	4	4	4	4	4	4	4	4	4
Attack Team 21-3	4	4	4	4	4	4	4	4	4	4	4	4	4	4	4	4
Attack Team 21-4	4	4	4	4	4	4	4	4	4	4	4	4	4	4	4	4
Attack Team 21-5	4	4	4	4	4	4	4	4	4	4	4	4	4	4	4	4
Attack Team 22-1	3	3	3	3	3	3	3	3	3	3	3	3	3	3	3	3
Attack Team 22-2	3	3	3	3	3	3	3	3	3	3	3	3	3	3	3	3
Attack Team 22-3	3	3	3	3	3	3	3	3	3	3	3	3	3	3	3	3
Fire Boundary	6	6	6	6	6	6	6	6	6	6	6	6	6	6	6	6
Personnel Assigned, Including Recuperation	42	42	42	42	42	42	42	42	38	38	38	38	38	38	38	38
Personnel Available	5	5	5	5	5	5	5	5	9	9	9	9	9	9	9	9
Total Personnel	47	47	47	47	47	47	47	47	47	47	47	47	47	47	47	47

Legend: 1 = Transit to Scene; 1 = Firefighting; 1 = Relieved, Transit to Recuperate; 1 = Recuperating; 1 = Available

Figure 555-8-5 Summary of Repair Party 2 Manning (Sheet 3 of 3)

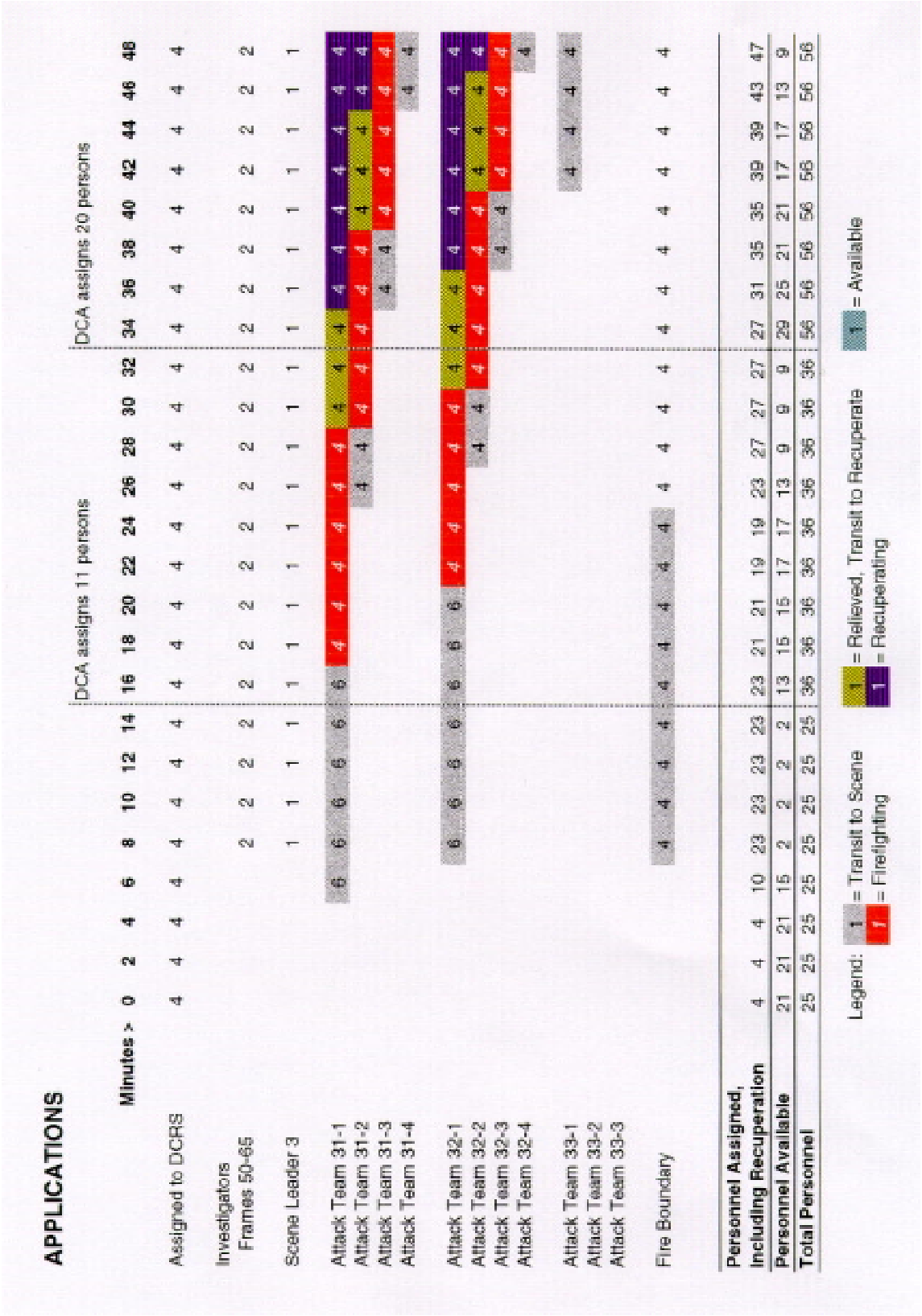

Figure 555-8-6 Summary of Repair Party 3 Manning (Sheet 1 of 3)

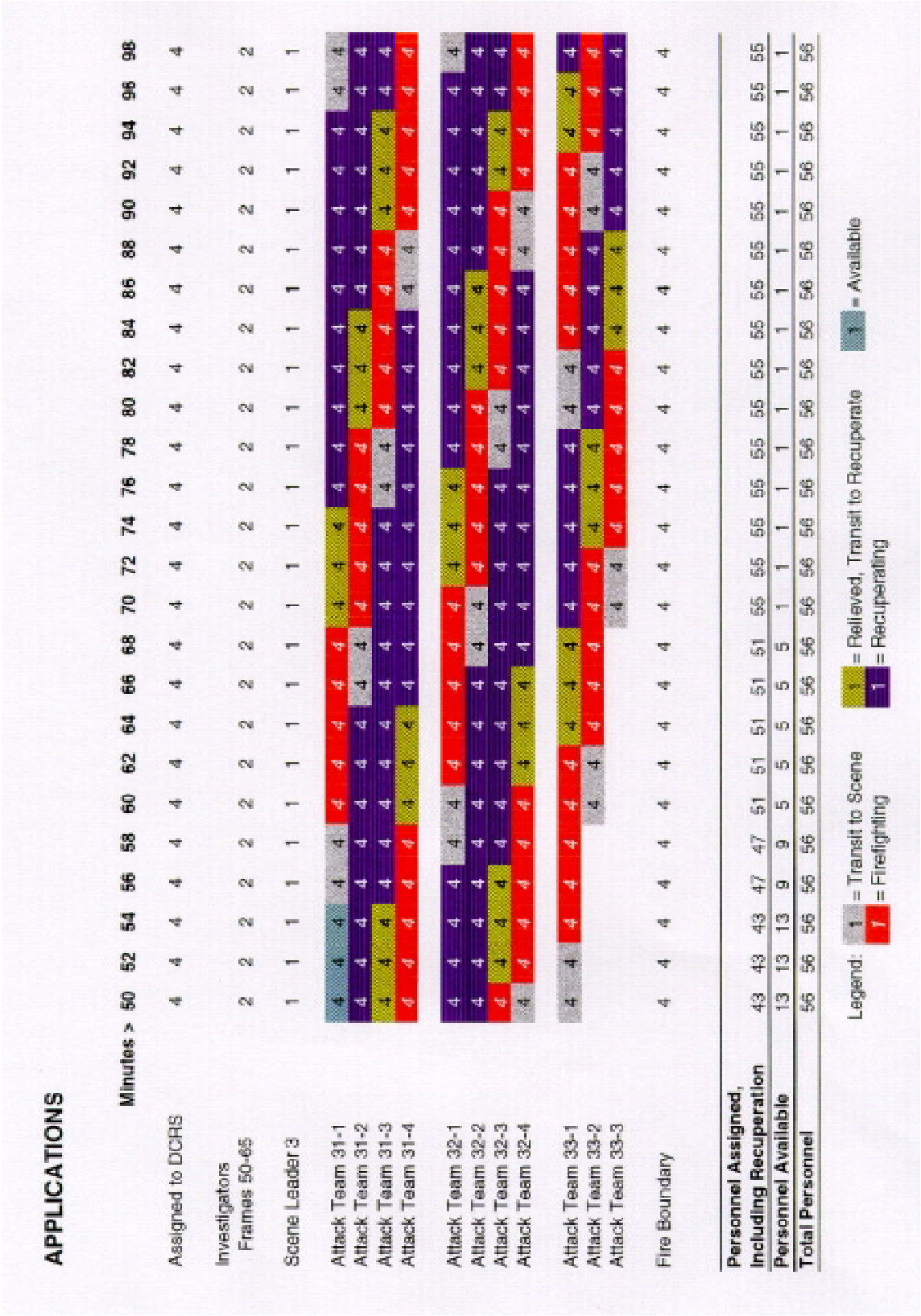

APPLICATIONS

Minutes >	50	52	54	56	58	60	62	64	66	68	70	72	74	76	78	80	82	84	86	88	90	92	94	96	98
Assigned to DCRS	4	4	4	4	4	4	4	4	4	4	4	4	4	4	4	4	4	4	4	4	4	4	4	4	4
Investigators Frames 50-65	2	2	2	2	2	2	2	2	2	2	2	2	2	2	2	2	2	2	2	2	2	2	2	2	2
Scene Leader 3	1	1	1	1	1	1	1	1	1	1	1	1	1	1	1	1	1	1	1	1	1	1	1	1	1
Attack Team 31-1	4	4	4	4	4	4	4	4	4	4	4	4	4	4	4	4	4	4	4	4	4	4	4	4	4
Attack Team 31-2	4	4	4	4	4	4	4	4	4	4	4	4	4	4	4	4	4	4	4	4	4	4	4	4	4
Attack Team 31-3	4	4	4	4	4	4	4	4	4	4	4	4	4	4	4	4	4	4	4	4	4	4	4	4	4
Attack Team 31-4	4	4	4	4	4	4	4	4	4	4	4	4	4	4	4	4	4	4	4	4	4	4	4	4	4
Attack Team 32-1	4	4	4	4	4	4	4	4	4	4	4	4	4	4	4	4	4	4	4	4	4	4	4	4	4
Attack Team 32-2	4	4	4	4	4	4	4	4	4	4	4	4	4	4	4	4	4	4	4	4	4	4	4	4	4
Attack Team 32-3	4	4	4	4	4	4	4	4	4	4	4	4	4	4	4	4	4	4	4	4	4	4	4	4	4
Attack Team 32-4	4	4	4	4	4	4	4	4	4	4	4	4	4	4	4	4	4	4	4	4	4	4	4	4	4
Attack Team 33-1	4	4	4	4	4	4	4	4	4	4	4	4	4	4	4	4	4	4	4	4	4	4	4	4	4
Attack Team 33-2						4	4	4	4	4	4	4	4	4	4	4	4	4	4	4	4	4	4	4	4
Attack Team 33-3											4	4	4	4	4	4	4	4	4	4	4	4	4	4	4
Fire Boundary	4	4	4	4	4	4	4	4	4	4	4	4	4	4	4	4	4	4	4	4	4	4	4	4	4
Personnel Assigned, Including Recuperation	43	43	43	47	47	51	51	51	51	51	55	55	55	55	55	55	55	55	55	55	55	55	55	55	55
Personnel Available	13	13	13	9	9	5	5	5	5	5	1	1	1	1	1	1	1	1	1	1	1	1	1	1	1
Total Personnel	56	56	56	56	56	56	56	56	56	56	56	56	56	56	56	56	56	56	56	56	56	56	56	56	56

Legend: 1 = Transit to Scene; 1 = Firefighting; 1 = Relieved, Transit to Recuperate; 1 = Recuperating; 1 = Available

Figure 555-8-6 Summary of Repair Party 3 Manning (Sheet 2 of 3)

APPLICATIONS

Minutes >	100	102	104	106	108	110	112	114	116	118	120	122	124	126	128	130
Assigned to DCRS	4	4	4	4	4	4	4	4	4	4	4	4	4	4	4	4
Investigators Frames 50-65	2	2	2	2	2	2	2	2	2	2	2	2	2	2	2	2
Scene Leader 3	1	1	1	1	1	1	1	1	1	1	1	1	1	1	1	1
Attack Team 31-1	4	4	4	4	4	4	4	4	4	4	4	4	4	4	4	4
Attack Team 31-2	4	4	4	4	4	4	4	4	4	4	4	4	4	4	4	4
Attack Team 31-3	4	4	4	4	4	4	4	4	4	4	4	4	4	4	4	4
Attack Team 31-4	4	4	4	4	4	4	4	4	4	4	4	4	4	4	4	4
Attack Team 32-1	4	4	4	4	4	4	4	4	4	4	4	4	4	4	4	4
Attack Team 32-2	4	4	4	4	4	4	4	4	4	4	4	4	4	4	4	4
Attack Team 32-3	4	4	4	4	4	4	4	4	4	4	4	4	4	4	4	4
Attack Team 32-4	4	4	4	4	4	4	4	4	4	4	4	4	4	4	4	4
Attack Team 33-1	4	4	4	4	4	4	4	4	4	4	4	4	4	4	4	4
Attack Team 33-2	4	4	4	4	4	4	4	4	4	4	4	4	4	4	4	4
Attack Team 33-3	4	4	4	4	4	4	4	4	4	4	4	4	4	4	4	4
Fire Boundary	4	4	4	4	4	4	4	4	4	4	4	4	4	4	4	4
Personnel Assigned, Including Recuperation	47	47	47	39	39	35	35	35	35	35	35	35	35	35	35	31
Personnel Available	9	9	9	17	17	21	21	21	21	21	21	21	21	21	21	25
Total Personnel	56	56	56	56	56	56	56	56	56	56	56	56	56	56	56	56

Legend: 1 = Transit to Scene; 1 = Firefighting; 1 = Relieved, Transit to Recuperate; 1 = Recuperating; 1 = Available

Figure 555-8-6 Summary of Repair Party 3 Manning (Sheet 3 of 3)

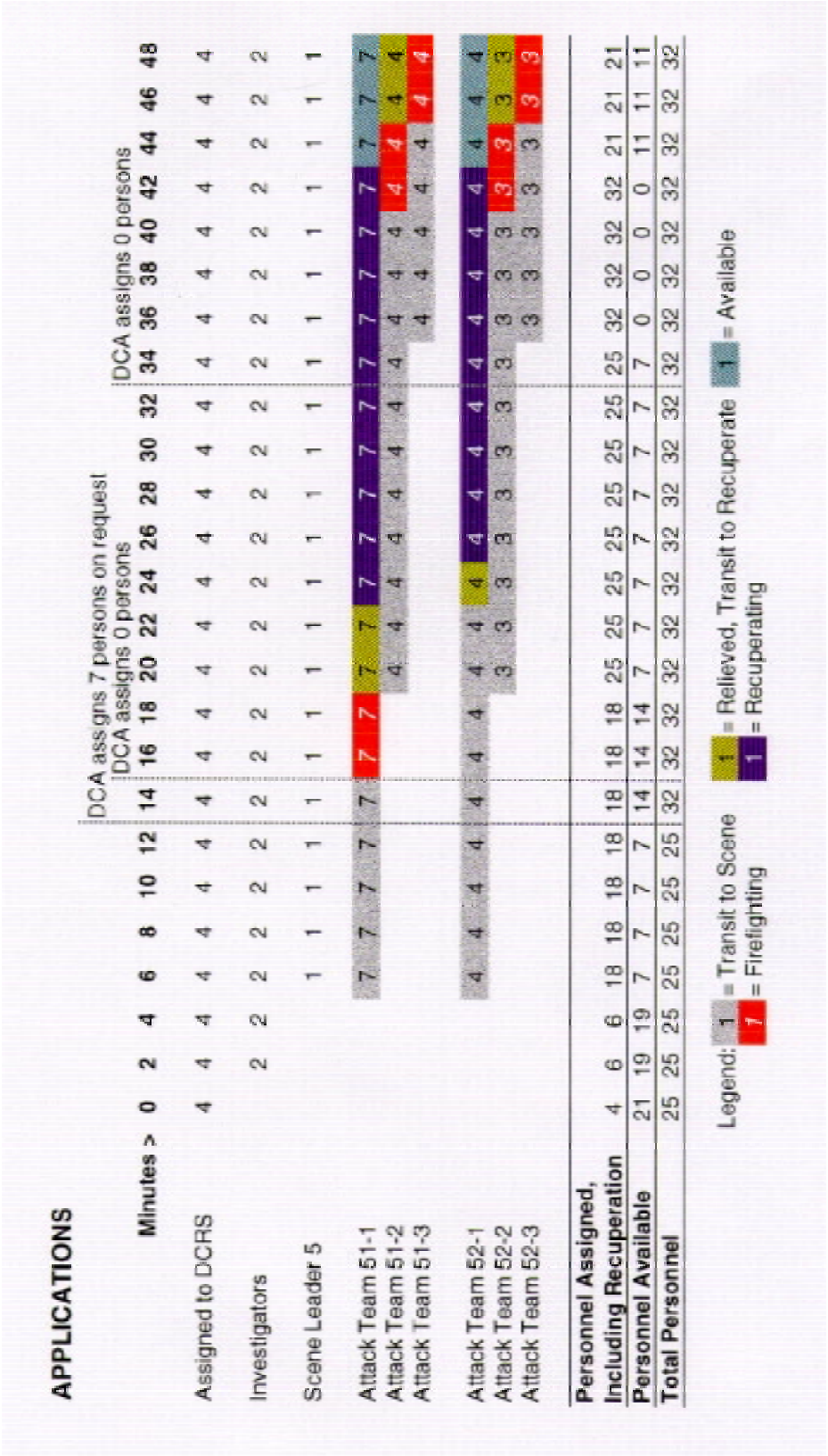

Figure 555-8-7 Summary of Repair Party 5 Manning (Sheet 1 of 3)

APPLICATIONS

Minutes >	50	52	54	56	58	60	62	64	66	68	70	72	74	76	78	80	82	84	86	88	90	92	94	96	98
Assigned to DCRS	4	4	4	4	4	4	4	4	4	4	4	4	4	4	4	4	4	4	4	4	4	4	4	4	4
Investigators	2	2	2	2	2	2	2	2	2	2	2	2	2	2	2	2	2	2	2	2	2	2	2	2	2
Scene Leader 5	1	1	1	1	1	1	1	1	1	1	1	1	1	1	1	1	1	1	1	1	1	1	1	1	1
Attack Team 51-1	7	7	7	5	5	5	5	5	5	5	5	5	5	5	5	5	5	5	5	5	5	5	5	5	5
Attack Team 51-2	4	4	4	4	4	4	4	4	4	4	4	4	4	4	4	4	4	4	4	4	4	4	4	4	4
Attack Team 51-3	4	4	4	4	4	4	4	4	4	4	4	4	4	4	4	4	4	4	4	4	4	4	4	4	4
Attack Team 52-1	4	4	4	4	4	4	4	4	4	4	4	4	4	4	4	4	4	4	4	4	4	4	4	4	4
Attack Team 52-2	3	3	3	3	3	3	3	3	3	3	3	3	3	3	3	3	3	3	3	3	3	3	3	3	3
Attack Team 52-3	3	3	3	3	3	3	3	3	3	3	3	3	3	3	3	3	3	3	3	3	3	3	3	3	3
Personnel Assigned, Including Recuperation	21	21	21	30	30	30	30	30	23	23	30	30	30	30	30	23	23	23	30	30	26	26	26	21	21
Personnel Available	11	11	11	2	2	2	2	2	9	9	2	2	2	2	2	9	9	9	2	2	6	6	6	11	11
Total Personnel	32	32	32	32	32	32	32	32	32	32	32	32	32	32	32	32	32	32	32	32	32	32	32	32	32

Legend: 1 = Transit to Scene; 1 = Firefighting; 1 = Relieved, Transit to Recuperate; 1 = Recuperating; 1 = Available

Figure 555-8-7 Summary of Repair Party 5 Manning (Sheet 2 of 3)

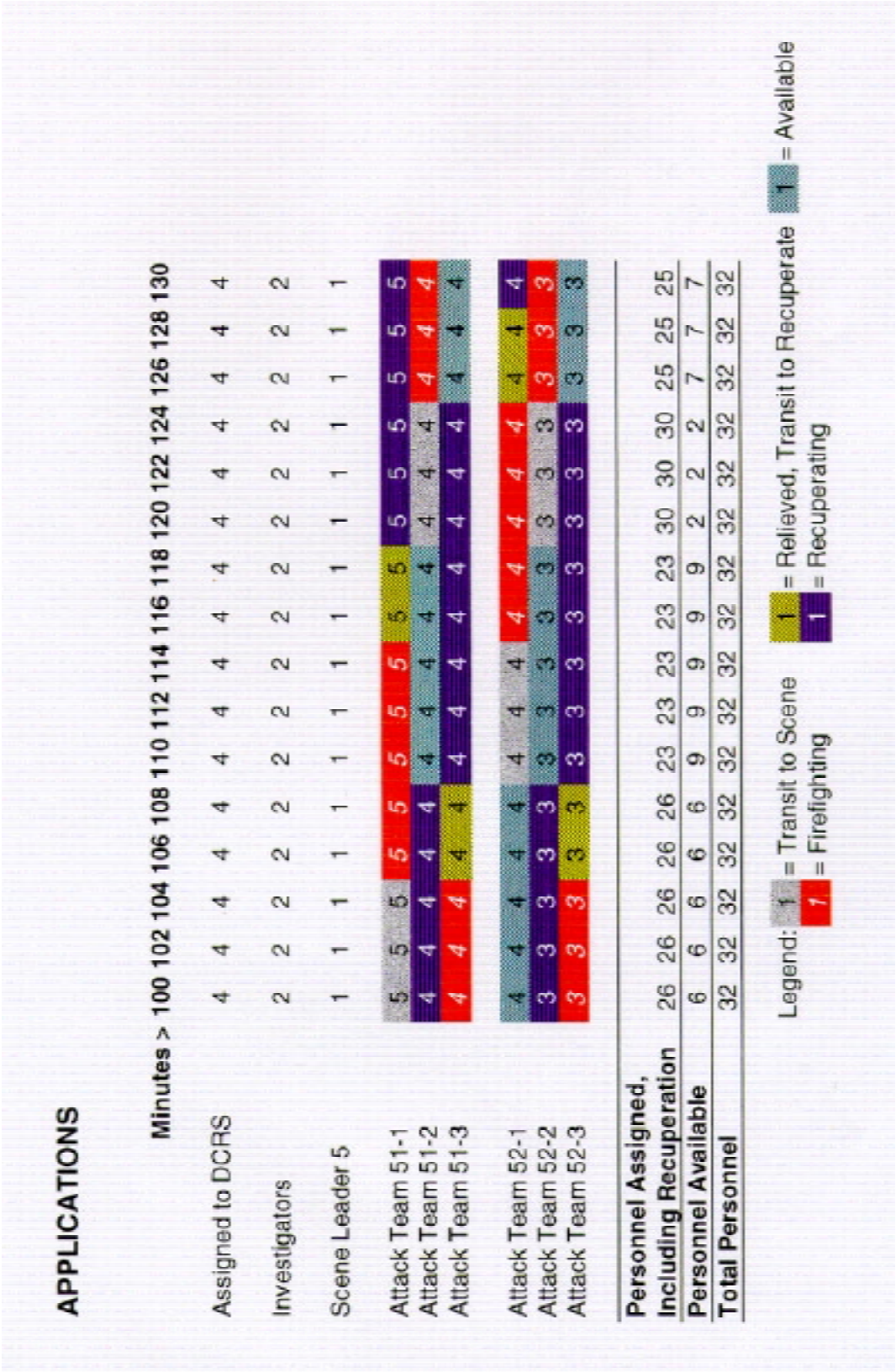

APPLICATIONS

Minutes >	100	102	104	106	108	110	112	114	116	118	120	122	124	126	128	130
Assigned to DCRS	4	4	4	4	4	4	4	4	4	4	4	4	4	4	4	4
Investigators	2	2	2	2	2	2	2	2	2	2	2	2	2	2	2	2
Scene Leader 5	1	1	1	1	1	1	1	1	1	1	1	1	1	1	1	1
Attack Team 51-1	5	5	5	5	5	5	5	5	5	5	5	5	5	5	5	5
Attack Team 51-2	4	4	4	4	4	4	4	4	4	4	4	4	4	4	4	4
Attack Team 51-3	4	4	4	4	4	4	4	4	4	4	4	4	4	4	4	4
Attack Team 52-1	4	4	4	4	4	4	4	4	4	4	4	4	4	4	4	4
Attack Team 52-2	3	3	3	3	3	3	3	3	3	3	3	3	3	3	3	3
Attack Team 52-3	3	3	3	3	3	3	3	3	3	3	3	3	3	3	3	3
Personnel Assigned, Including Recuperation	26	26	26	26	26	23	23	23	23	23	30	30	30	25	25	25
Personnel Available	6	6	6	6	6	9	9	9	9	9	2	2	2	7	7	7
Total Personnel	32	32	32	32	32	32	32	32	32	32	32	32	32	32	32	32

Legend: 1 = Transit to Scene; 1 = Firefighting; 1 = Relieved, Transit to Recuperate; 1 = Recuperating; 1 = Available

Figure 555-8-7 Summary of Repair Party 5 Manning (Sheet 3 of 3)

555-8.11.2.2 Immediate Damage. The missile warhead detonates in the Pump Room 5–42–0 on the starboard side of the fifth deck at about frame 45. Blast holes are opened to AMR below, the AC Machinery Room forward, the Storeroom aft, and the Library and Recreation Room above. Blast damage occurs in all of these spaces and within a few minutes these spaces are involved in a significant fire. The ignition source in all cases is unexpended missile fuel. All spaces, except for the AMR and second deck cableway, starboard side of frame 45, experience a class A fire. A class B fire starts in the AMR, and the second deck cableway fire is considered to be both a class A and class C fire since these cables may be energized and have their conductors exposed due to fire damage. Fragments extend to compartments beyond the blast damage. The resulting structural damage occurs in two watertight subdivisions, between bulkheads 30 and 50 and bulkheads 50 and 65 from the second through fifth decks. Other damage that occurs immediately following the missile hit is as follows:

a. Electrical power is lost forward of frame 65.

b. Firemain pressure drops.

c. Ventilation is lost in the zone between frames 30 and 65.

d. Seawater sprinkling systems in compartments 3–30–0, 3–50–1, 4–30–0, 4–50–0, 5–50–0 and Halon and AFFF Bilge Sprinkling systems in 7–30–0 are permanently out of service due to initial weapon effects.

555-8.11.2.3 Initial Actions. By approximately T=1 min. the following actions have been executed:

a. Repair 5 (located aft of frame 65) reports loss of communications with the AMR (7–30–0). The repair party leader for Repair 5 dispatches investigators to the AMR.

b. The DCA responds to the drop in firemain pressure by ordering the firemain isolation valves closed at frame 65. This action results in the restoration of the firemain pressure aft of frame 65.

c. The Engineering Officer (CHENG) orders electrical power investigated and restored forward of frame 65. The DCA passes this order to Repair 2.

d. The DCA directs Repair 3 to prepare to support damage control efforts by Repair 2 forward of frame 65.

555-8.11.2.4 Dispatching Investigators. To determine the extent of damage in an assigned area of the ship, each repair party leader dispatches pairs of investigators. Each pair of investigators is assigned to cover no more than a single watertight subdivision. The area covered by each team of investigators is limited so that damage can be discovered and reported quickly. In this way, reports of damage can be obtained and response teams dispatched to control damage before the damage spreads significantly.

555-8.11.2.4.1 Dispatching Investigators From Repair 2. By about T=1.5 minutes investigators in Repair 2 have dressed out and been dispatched as follows in three teams of two investigators each:

1. Forward of frame 30

2. Frames 30–50 (other than machinery spaces)

3. Frames 50–65

These six investigators consist of the two investigators typically assigned to a repair party (see NWP 3–20.31, Section 2.5) augmented by four individuals with a thorough knowledge of the repair party's area of responsibility. Repair 5 dispatches two investigators to the machinery spaces between frames 30 and 50.

555-8.11.2.4.2 Investigator Actions. Investigators initially conduct a rapid compartment by compartment survey of damage beginning with the damage control (DC) deck and proceeding below decks. Their objective is to quickly cover their assigned areas and report to the repair party leader so that the party leader can dispatch attack teams to the proper areas as quickly as possible. Investigators report (using portable radios in this scenario) findings as they progress through the ship. Repair party leaders dispatch attack team as reports are received from investigators. Investigators continue their search for damage while the initial response teams proceed to the scene. After investigating their assigned areas and reporting conditions to their Repair Party Leaders, investigators may be directed to continue to monitor their areas or to return to the repair party staging area for recuperation or other duties.

555-8.11.2.4.2.1 Once fire boundaries have been established, investigators can assist boundarymen in their area. While investigating the area, investigators can monitor the breathing air supply of boundarymen and relieve them at convenient times so that the boundarymen can replenish their breathing air. In this manner, fire boundaries can be maintained continuously with a minimum number of personnel. As firefighting efforts progress extra investigators and boundarymen can fill in as reflash watch for a compartment.

555-8.11.2.4.3 Managing Investigators. Once the repair party leaders have obtained an understanding of conditions within their areas of responsibility, excess investigators can be assigned to other duties. In a developing situation, such as a mass conflagration, investigators are used well beyond their initial reports to help in providing real-time information of fire spread and areas put at risk by the development of the fire. Repair party leaders continue to monitor the situation according to guidance provided in paragraph 555–5.4.2. Examples from the scenario are summarized below:

MASS CONFLAGRATION INITIAL RESPONSE

Time(min.)	Investigator, Event and Location
1	Due to a loss of communications with the AMR located on the sixth deck between frames 30 and 50, Repair 5 orders two investigators dispatched to check the AMR.
1-1/2	Investigators are dispatched from Repair 2 for the areas forward of frame 30, frames 30-50 and frames 50-65.
7	Repair 2 investigators between frames 50 and 65 are replaced by Repair 3 investigators and report to Repair 2 for new assignment.
9	Repair 5 investigators from the AMR (frame 7-30-0) return to DCRS 5 and report to RPL 5 for new assignment. These investigators are sent to ER No. 1 to assist the watchstander in setting the fire boundary at frame 65 on decks five and six. They will be able to alternate with the watchstander for air replenishment, help to prevent fire spread, and relay reports directly to Scene Leader (SL) 5 regarding the conditions of the bulkhead.
15	Repair 2 investigators forward of frame 30 return to DCRS 5 (Note: DCRS 2 evacuated to DCRS 5 at T=5 min.) and report to Repair 2 for new assignment. Repair 2 assigns the investigators to relieve forward boundarymen for air replenishment. The individuals will continue to check the general area, assist the boundaryman, and provide relief so the boundaryman can replenish breathing air.
23	Investigators in the frame 30-50 watertight subdivision return to DCRS 5 and report to Repair 2 for new assignment. Due to the developing situation Repair 2 maintains these investigators in their role to monitor fire spread and relieve boundarymen for air replenishment. They will be able to assist in hose deployment for Repair 3 teams, using their familiarity with the areas forward of frame 65 to help determine the best method of approaching fire spaces.
25-1/2	Investigators in the frame 50-65 watertight subdivision return to DCRS 3 and report for new assignment. Repair 3 maintains these investigators in their role to help assess the developing fire and assist boundarymen.

555-8.11.2.5 Responding to Investigator Reports. Reports of fire, smoke, hot decks or bulkheads, and other damage in specific, local areas will be provided to repair party leaders by investigators as fragments of informa-

tion; initially there probably will not be an understanding of the overall situation. Repair party leaders respond to individual investigator reports as they are received by dispatching response teams. Consequently, attack teams probably will be dispatched before there is an understanding of the overall situation. Typically, this approach is better than waiting for the overall situation to be understood before dispatching response teams. By dispatching attack teams in response to individual reports without delay, attack teams generally will be sent to damaged compartments more susceptible to fire growth on the perimeter compartments would likely be the same areas as if there was a good understanding of the overall situation. Any additional delay after receiving individual reports would only delay fire firefighting efforts, thereby allowing the fire to spread further.

555-8.11.2.5.1 As the damage control response progresses, repair party leaders receive more information from investigators and, eventually, from scene leaders. In this way, the repair party leaders continue to build the improved awareness of the situation that will be critical to eventual success. Repair party leaders pass information to DC Central, providing the DCA with an evolving understanding of the situation with respect to repair party resources as well as the status of the damage and the response to damage. Additionally, the DCA has an important role in restoring the ship systems needed for firefighting, such as the firemain.

555-8.11.2.5.2 The damage in this scenario is below the damage control deck. Therefore, investigators will be approaching the damaged area from above. At the same time, the fire will spread faster in the vertical direction than horizontally. As a result, the early reports from investigators probably describe areas at which fire boundaries need to be set quickly to control the vertical spread of life.

555-8.11.2.5.3 In a mass conflagration, some burning spaces may be surrounded by other burning compartments and will be inaccessible to investigators and attack teams. Consequently, the DCA and repair party leaders must infer the conditions in some spaces from knowledge of only the surrounding areas, and plan the fire attack accordingly.

555-8.11.2.6 Firefighting Response. This paragraph summarizes the damage control events directly related to fighting the fire; the basic process of investigating and reporting damage, dispatching attack teams, and attacking the fire.

MASS CONFLAGRATION FIREFIGHTING RESPONSE

Time(min.)	Firefighting Response Event and Location
1-1/2	In response to orders from DCA, Repair 2 dispatches an electrician and an individual familiar with electrical safety to restore electrical power forward of frame 65.
2	The DCA notifies all repair parties that firemain pressure is restored aft of frame 65. Repair party leaders note that any hoses for firefighting will have to be rigged from aft of frame 65 until firemain forward of frame 65 is restored. Hose runs will therefore be long. Additional personnel, other than attack team personnel, are assigned just to run hoses so that attack team personnel will have adequate endurance when they start to fight the fire. See Figure 555-8-1.
3	Investigators in the frame 30-50 watertight subdivision report smoke from the starboard access trunk on the second deck. Repair 2 orders a smoke blanket installed in accordance with guidance provided in paragraph 555-7.2.7.2.2, but smoke control men return and report that structural damage prevents smoke blanket rigging. Repair 2 orders a smoke curtain rigged at each subdivision water tight door at frames 50 and 65.

Note

Anticipate that smoke may be a major problem throughout the ship. Smoke boundaries should be set as quickly as possible. See paragraph 555-7.2.7.2. Rapid deployment of smoke curtains can effectively retard spread of smoke.

	Smoke is reported coming through fragment holes in Engine Room 1 (ER No. 1), located aft of frame 65. The Engineering Officer orders positive ventilation set in ER NO. 1 to prevent additional large quantities of smoke from entering ER No. 1 (see paragraph 555-10.3.7). A fire boundary is set using a watchstander in the space on the frame 65 bulkhead. See paragraph 555-7.2.7.1.
4-1/4	Based on a report from topside of smoke from a hole in the starboard side at frame 50, the DCA assumes that the port-to-starboard firemain cross-connect is damaged at frame 50 and orders the manual isolation valve closed on port side on second deck. RPL 2 sends a messenger to close the valve.
4-1/2	Smoke and heat are overwhelming DCRS 2, which is located on the port side of the second deck at frame 30. RPL 2 orders DCRS 2 personnel to evacuate to DCRS 5.
5	Repair 5 receives the first report of a class B fire from the investigator sent to the AMR. RPL #5 immediately dispatches a scene leader (SL 5) and attack teams (51-1 and 52-1) whose responsibilities are described in paragraph 555-5.4.4.
5-1/4	Repair 2 receives a report of heavy smoke and fire in a port side access trunk, 4-42-2, between the third and fourth decks. Since the attack team personnel have departed for DCRS 5, RPL #2 requests assistance from DCA in responding to the fire in the port access trunk on the fourth deck. The DCA orders Repair 3 to provide an attack team to work under direction of the Repair 2 scene leader (SL 2) to attack the fire reported in Trunk 4-42-2 with a hose rigged from aft of frame 65. RPL #3 dispatches attack team (31-1) to the port access trunk. Repair 2 dispatches SL 2 to direct attack team from Repair 3.
6 to 7	While DCRS 2 personnel are relocating to DCRS 5, investigators report a hot, buckled deck on the third deck in Crew Living Space 3-30-0 and smoke coming through fragment holes in the deck. Investigators forward of frame 30 report bulkhead 30 is hot on the fourth deck and smoke is coming through fragment holes in bulkhead 30 from aft. Investigators in the frame 50-65 watertight subdivision report fire in fourth deck Passageway, 4-55-0. DCA orders Repair 3 to assume responsibility for the entire subdivision between Frames 50-65. Repair 2 is responsible for non-machinery spaces forward of frame 50. Figure 555-8-8 shows a ship's profile of the modified areas of responsibility. DCA directs Repair 2 to use port passageway and Repair 3 to use starboard. RPL 3 dispatches SL 3 and attack team 32-1 to the fire in Passageway 4-55-0.
7-1/2	RPL 2 arrives at DCRS 5 and reports closing a cross-connect firemain isolation valve as ordered by the DCA. The DCA then orders the firemain remote control isolation valve opened at frame 65, port side. Based on a summary of investigator reports, Repairs 2 and 3 designate primary fire boundaries at frames 30 and 65 and a horizontal fire boundary on the 2nd deck between frames 30 and 65. Repairs 2 and 3 order boundarymen to man these boundaries. Hoses are rigged from aft of frame 65. The DCA concurs to a Repair 2 recommendation to set up active desmoking on the 2nd deck. Repair 2 establishes a smoke control zone on the second deck between frames 30 and 65, and directs a desmoking team to rig an exhaust path to weather forward of frame 30 with the supply path rigged from aft of frame 65.
8-1/4	Repair 2 investigators report possible fire in Crew Living Space 3-30-0. Repair 2 dispatches attack team 21-1 to attack the fire.
9-3/4	Investigators report bulkhead 30 on the fifth and sixth decks is buckled and hot with smoke coming through fragment holes. Investigators report bulkhead 60 on the fifth deck buckled with doors to Storeroom 5-50-0 hot and jammed and smoke coming from fragment holes in the bulkhead. A few minutes later, investigators report smoke in Passageway 6-55-0 and in Storerooms 6-50-1 and 6-50-2 and fragment holes in bulkhead 50 on the sixth deck. Since most of the personnel from Repairs 2, 3, and 5 have been dispatched to rig hoses to set boundaries and attack fires reported before this time, and because of the rapidity of receiving these reports, no action is initiated immediately in response to the reports received in this time frame.
11	Damage Control Central (DCC), which is located on the port side of the second deck at frame 30 is becoming overwhelmed by smoke. DCA orders DCC personnel to evacuate is secondary DCC at DCRS 3.

11-1/2 The firemain is restored on the port side forward of frame 65. Sprinklers activate in compartments 3-30-2, 3-50-2, 3-55-2 and 4-30-2.

13 Based on investigator reports, Repair 3 orders horizontal fire boundary between frames 50 -65 moved down to the 3rd deck. This partially a result of the seawater sprinklers in compartments 3-55-2 and 3-50-2 becoming operational. These compartments will need to be checked periodically to ensure the systems are maintaining the boundary.

14 Repair 2 investigators report smoke coming out of an open hatch on the second deck, starboard side, and fire spread to a cableway in the overhead of the second deck, frame 45, starboard side. Repair 2 requests four supplementary personnel from DCA. DCA forwards request to XO who dispatches persons to repair 2. On arrival at DCRS 5 Repair 2 dispatches as attack team 22-1 to attack the fire.

14 Repair 5 requests 7 supplementary personnel based on planned relief of teams 51 and 52. DCA dispatches the requested manpower to Repair 5.

15 At this point, the DCA has reestablished DCC in DCRS 5 and pauses to size up the situation. The status is as follows (see Figure 555-8-1):

- The missile has hit on the starboard side at approximately frame 50 near the fourth or fifth deck.
- Electrical power has not been restored forward of frame 65. Electricians have been dispatched from Repair 2 to restore power.
- The Engineering Officer in Engine Room 1 has been able to use a watchstander and Repair 5 investigators to provide a fire boundary aft of frame 65 on decks 5 and 6, and positive ventilation from ER No. 1 to provide a smoke boundary against the penetrations resulting from fragment damage.
- DCRS 2 has been evacuated to DCRS 5 and DCC has been evacuated to DCRS 3 due to heat and smoke.
- Fire reported in AMR 7-30-0. SL 5 with primary (51-1) and back-up (52-1) attack teams have been dispatched by Repair 5. Attack team 51-1 is to re-enter through the escape trunk. Communications with the AMR have been lost.
- Fire is reported in port Access Trunk 4-42-2. An attack team (31-1) has been dispatched by Repair 3 to report to SL 2.
- Fire is reported in Passage 4-55-0. SL 3 and Attack team 32-1 have been dispatched by Repair 3.
- Bulkhead 30 is reported as hot with smoke coming from aft through fragment holes. A boundary team has been dispatched from Repair 2.
- Responsibility for the subdivision between frames 50 and 65 has been transferred to Repair 3.
- The firemain has been restored on the port side forward, but not until several hoses were being rigged from aft of frame 65. The port side passage on the DC deck is congested with fire hoses and visibility is poor due to smoke.
- Primary fire boundaries have been ordered at Frames 30 and 65 with a horizontal fire boundary set on the 2nd deck.
- Active desmoking has been ordered rigged for a smoke control zone on the second deck between frames 30 and 65.
- Seawater sprinkling systems are down in compartments 3-30-0, 3-50-1, 4-30-0, 4-50-0, and 5-50-0. In addition the Halon system and AFFF capability for the engineering spaces are unavailable, as is AFFF bilge sprinkling.
- Probable fire is reported in Crew Living Space 3-30-0 and attack team 21-1 has been dispatched by Repair 2.
- Bulkhead 60 on the fifth deck is buckled and the doors to Storeroom 5-50-0 are hot and jammed. A response team has not been dispatched to this area.

- Smoke is reported in Passageway 6-66-0 and in Storerooms 6-50-1 and 6-50-2 and fragment holes are reported in bulkhhead 50 on the sixth deck. A response team has not been dispatched to this area.
- RPLs have requested additional personnel for reliefs and the DCA has requested additional personnel from the XO. (Management of reliefs is discussed in paragraph 555-8.11.2.7.4.)
- Fire is reported in Passage 2-31-0 on the starboard side at frame 40 in the overhead. Fire has spread to this area from below through a blown off hatch in the second deck. Four supplementary personnel have been requested by Repair 2 to attack this fire.
- Due to the smoke, long hose runs, and the lack of access on the starboard side from structural damage, neither the boundary teams nor the attack teams have arrived on scene.
- There are no large scale personnel casualties.
- There is no major flooding.
- There are no immediate major efforts required for his repair organization to restore propulsion or other vital ship systems.

Based on this assessment, the DCA decides that all critical areas are being addressed. Responding to the possible fires on the fifth and sixth decks in watertight subdivision 50-65 can wait because the area is bounded by the fire boundary set at frame 30, the fire attack on the fourth deck above and by the watchstander maintaining a boundary in the ER aft of frame 65. The DCA then focuses his attention on managing relief personnel.

The DCA attempts to plan reliefs to maintain an uninterrupted attack on the fires by relief teams arriving before the active team is forced from the scene. (Firefighter endurance is discussed in 555-8.11.2.8.) For the initial attacks, the DCA estimates a 10 minute transit time and 10 minutes on scene for each attack team. Consequently, the relief team should arrive on scene 20 minutes after the active team is dispatched. To allow for recuperation of relieved teams before they can be returned to duty, the DCA expects that three relief teams, each consisting of three hosemen and a leader, will be required for each attack team. Consequently, with five attack teams deployed, it will be necessary to have 60 relief personnel. Three relief parties, totaling 11 personnel, have already been requested. Some of the additional relief personnel needed can be drawn from the repair party resources; however, to ensure that assets are available, the DCA decides to request all 49 from the XO. Consequently, he requests the XO to make 24 reliefs available immediately and 25 more available in 15 minutes. The DCA assigns the 24 immediate reliefs as follows: 13 persons to Repair 2, 11 persons to Repair 3 and no additional manpower to Repair 5. The DCA determines that Repair 5 is able to provide reliefs for teams 51 and 52 with the seven personnel already dispatched at the earlier request of Repair 5.

17-1/4 Attack team 31-1 enters port side Access Trunk 3-41-2 and starts to cool the hatch in preparation for an indirect attack on the fire in Access Trunk 4-42-2 below. The attack is conducted in accordance with guidance provided in paragraphs 555-7.2.4 and 555-7.6.2. The scene leader who was dispatched with attack team 32-1 is positioned on second deck, port side, near frame 48.

19 A fire is discovered upon attack team 21-1's arrival in the Crew Living Space 3-30-0 and attacked first using a fog attack and then directly in accordance with guidance provided in paragraphs 555-7.5.6 and 555-7.5.7.

Attack team 51-1 reports that they cannot gain access to the AMR due to extreme heat. Primary attack team 51-1 leaves the scene to recuperate. SL 5 directs secondary attack team 52-1 to reroute hoses to the sixth deck forward of bulkhead 30 to attempt an indirect attack on the AMR fire through the bulkhead.

22 Attack team 32-1 enters the side access trunk to Passage 4-55-0. The fire in Passage 4-55-0 will be attacked indirectly from the port access trunk in accordance with guidance provided in paragraphs 555-7.6.2 and 555-7.14.6. After the passage is cooled sufficiently to permit entry, the fire is then attacked directly in accordance with guidance provided in paragraphs 555-7.5.5. This fire in Passage 4-55-0 is reported out at T=32 min. at which time the scene leader directs Attack team 32-1 to attack the fire in Storeroom 4-50-0.

Active desmoking path is completed and active desmoking is initiated for 2nd deck between frames 30 and 65.

25 Attack team 22-1 arrives at the second deck starboard side, frame 48. The fire in the overhead cableway is attacked directly in accordance with guidance provided in paragraphs 555-7.5.5.d and 555-8.2. RPL 2 directs the Repair 2 scene leader (SL 2) on second deck, frame 48 to direct this attack team.

Note

For any major fire in a compartment, fire parties should be alert to the possibility of lingering fires at the overhead, especially where oil soaked lagging or overhead cable runs are present. Cable fires can become deep seated and multiple applications of water may be necessary to achieve total exinguishment. For electric cables and other potentially energized electrical equipment, firefighting nozzles should be set for a spray pattern with at least a four foot standoff distance.

25 Repair 2 directs the investigators to temporarily relieve the boundarymen so that the boundarymen can replenish their breathing air. The investigators and boundarymen then move the hose to the sixth deck to ensure that fire does not spread to the Flammable Liquid Storeroom 6-24-2. Next, an investigator checks bulkhead 30 on the fourth and fifth decks to determine if boundary cooling in those locations is necessary. As cooling is required, the investigators and boundarymen move the hose to the required location, and the investigators resume checks on other decks.

29 Attack team 21-2 attempts entry into Crew Living Space 3-30-0 while conducting a fog attack. They are driven out by heat, particularly the hot deck, and their relief, attack team 21-2, resumes the fog attack from the door to prevent flashover of the space. Team 31-1 attacking the fire in Access Trunk 4-42-2 from above attempts access and fails due to blast damage to the ladder into the trunk.

SL 2 directs the relief team 31-2 to enter Crew Living Space 4-30-2 through the escape scuttle and conduct alternating indirect attacks into Access Trunk 4-42-2 and the Library and Rec. Room 4-30-0; controlling this fire should remove the heat source to the deck in Crew Living Space 3-30-0 above.

32 Attack team 32-2 reports fire out in 4-55-0. SL 3 directs attack team 32-2 to attack into Storeroom 4-50-0 and Post Office 4-50-1. Attack team 32-2 must force entry into spaces due to jammed hatches.

32 DCA assigns additional 25 reliefs received from the XO as follows: 5 persons to Repair 2, 20 persons to Repair 3, and no additional manpower to Repair 5. Repair 5 is able to provide continual firefighting with those persons allocated since Repair 5 has a limited area of responsibility.

35 Attack team 22-2 reports the fire is out on the second deck, starboard, frame 48 and Attack team 22-2 starts an indirect attack in Access Trunk 3-41-1 via the blown off hatch 2-42-1.

39 Attack team 31-3 has reached 4-30-2, which has an operating sprinkler system, and is conducting alternating indirect attacks into Access Trunk 4-42-2 and the Library and Recreation Room 4-30-0 through fragmentation holes in the bulkhead.

42 Attack teams 51-2 and 52-2 from Repair 5 start an indirect attack on the fire in the AMR through fragment holes in bulkhead 30 in the Flammable Liquids Storeroom 6-24-2 and Passage 6-22-1.

Attack team 33-1 from Repair 3 is ordered to attack the fires on the fifth deck between bulkheads 50 and 65.

45 Attack Team 31-3 is able to attack the fire in trunk 4-42-2 directly from the doorway of 4-30-2. SL 2 directs attack team 21-3 in Crew Living 3-30-0 to attempt reentry now that the fire below is being attacked. Attack team 22-2 firefighting the fire in Access Trunk 3-41-1 cannot enter due to the blast damaged ladder into the trunk.

SL 2 orders attack team 22-2 to proceed to 4-30-2 and indirectly attack the fire in the Library and Rec. Room 4-30-0. Attack team 22-3 relieves 22-2 during this effort.

Attack team 32-3 aft has broken down the jammed access doors into the Ship's Store 4-50-0 and the Post Office 4-50-1 and is attacking fires in these spaces. (See Figure 555-8-2.)

65 Attack team 31-1 reports fire under control in Trunk 4-42-2, that fire is extending up through the damaged hatch from trunk 5-42-2 below and that 4-42-2 is blocked by debris, preventing entry. Attack team 31-1 is controlling fire with fog spray.

Attack team 33-2 has arrived on the fifth deck and is attacking the fire in Passage 5-55-0.

90 Attack team 21-3 reports the fire is out in Crew Living 3-30-0 starts to gain entry into Access Trunk 3-41-1 to attack the fire there.

SL 2 has ordered a support team to help remove major debris from Access Trunk 4-42-2 so that it can be used to access 5-42-2 below and the Library and Recreation Room 4-30-0.

Attack team 32-4 reports fires are out in the Ship's Store 4-55-0 and the Post Office 4-50-1, reflash watch set and overhaul in progress. Attack team 32-4 advances to fifth deck to assist attack team 33-1.

100 Attack team 21-5 has broken through the jammed door into Access Trunk 3-41-1 and has started to attack the fire. Within a few minutes, they report the fire is out in Access Trunk 3-41-1. Attak team 21-5 directs water through the hatch into Access Trunk 4-41-1.

Sufficient debris has been removed from Access Trunk 4-42-2 that it is being used by attack team 31-1 to attack the fire in Access Trunk 5-42-2 below and by attack team 22-4 to attack the fire in the Library and Rec. Room 4-30-0.

Attack team 51-3 from Repair 5 is prepared to reenter the AMR through the escape trunk and the indirect attack into the AMR has been stopped by SL 5.

140 The fire in the Library and Rec. Room 4-30-0 is considered out. Due to extensive blast damage, the space cannot be entered to overhaul the fire. Consequently, the various hose 22 teams rotate through as a reflash watch in Access Trunk 4-42-2. The fire in Passage 5-55-0 is out and attack teams 33 and 32 start to break through jammed doors to attack the fire in Storeroom 5-50-0. They gain entry in about five minutes and in about another 10 minutes have the fire in the Storeroom under control.

SL 5 reports the fire in the AMR is out. The fire in Access Trunk 5-52-2 is reported out by attack team 21; a temporary ladder has been rigged into the space and debris is being cleared so that the space can be accessed.

160 Access Trunk 5-42-2 has been made accessible to attack team 31 and indirect attacks are started into the Pump Room 5-42-0 and the AC Machinery Room 5-30-0. Attack teams 32 and 33 attack the fire in Pump Room 5-52-0 through damaged bulkhead from Storeroom 5-50-0.

190 Fires are out in Pump Room 5-42-0 and AC Machinery Room 5-30-0. Due to extensive blast damage, these spaces cannot be entered for a complete overhaul of the fires. Consequently, a two man reflash watch is posted.

All fires have been reported out. Fire overhaul is in progress and reflash watches are set. Relieving personnel no longer need FFEs; with the reduced heat stress, their endurance on scene is limited only by breathing air. Portable eductors are rigged for dewatering in the AMR through the escape trunk.

555-8.11.2.7 Firefighter Endurance and Managing Reliefs. Firefighter endurance is determined by available breathing air and heat stress, whichever forces the firefighter to leave the scene earliest. These two factors are discussed below.

555-8.11.2.7.1 Breathing Air. The amount of time spent in transit to and from the fire scene is affected by the distance the attack team must travel from the point where they are dispatched to the point of attack. For this sce-

nario, breathing air is not required when attack teams are aft of frame 65. Other influences on the transit times are smoke density and whether passages are lighted. Initially, only light smoke fills access routes; however, within about 10 to 15 minutes, heavy smoke obscures vision and reduces the speed of teams moving to positions where fires can be attacked. Firefighters are also slowed in transit as they transit through water-tight doors and hatches and up or down ladders. These factors are assumed to result in transit times in this scenario of 10 minutes for access to or egress from the fire scene. With a 30–minute air supply and a 20–minute "round trip" transit time, there is a 10–minute supply of breathing air available for firefighting on the scene. In some cases, the transit time is shorter which provides more time on scene for firefighting.

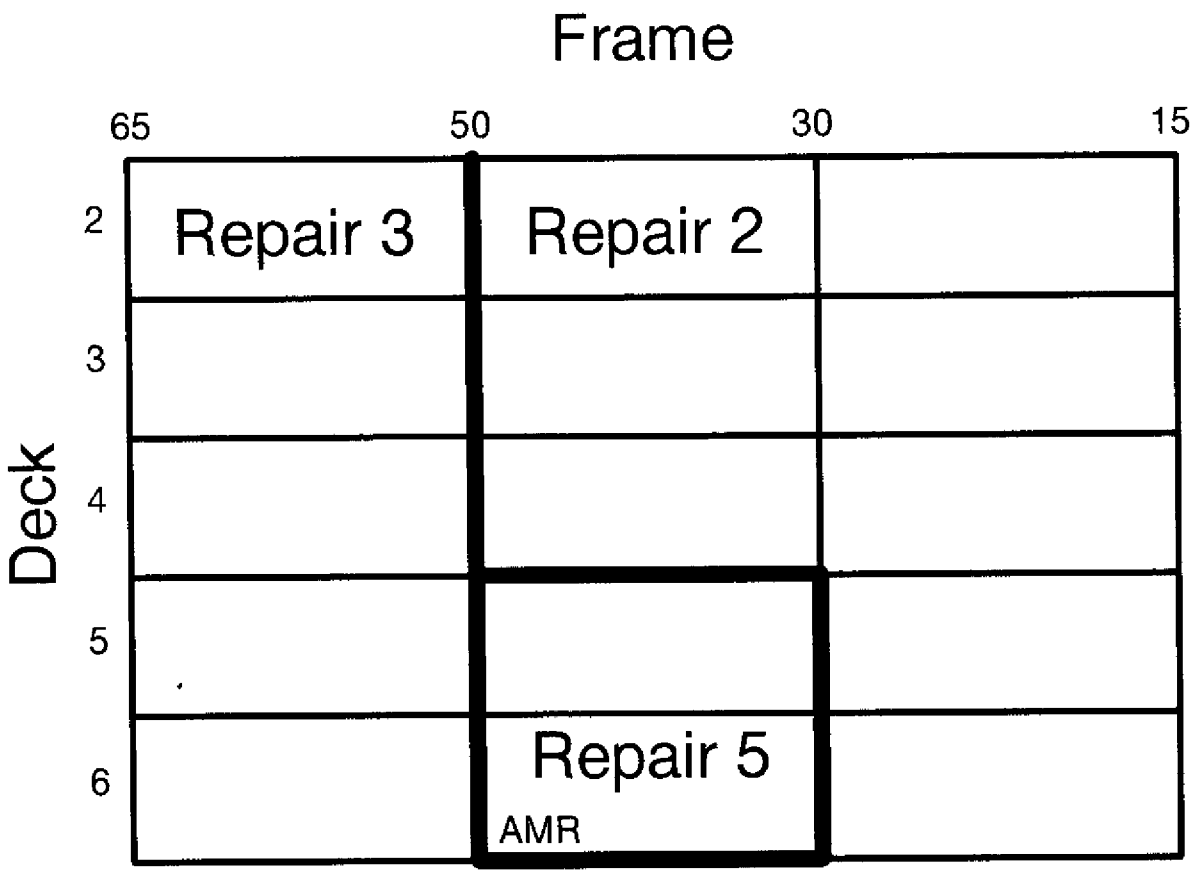

Figure 555-8-8 Modified Areas of Responsibility at T=7 Minutes

555-8.11.2.7.2 Heat Stress and Burns. Heat stress further limits the individual's abilities to continue an attack (see guidance provided in paragraphs 555–7.5.10, 555–6.1.3, and 555–7.14.2). Time on scene also can be curtailed by burns from touching hot surfaces or from firefighting water flashing to steam (see guidance in paragraphs 555–7.5.10, 555–6.1.3, and 555–7.14.2). Additionally, hot decks cause feet and legs to get hot, even when firefighters are wearing boots. Experience indicates that early in a major fire heat stress and burns limit the endurance on scene to approximately 10 minutes. (See paragraph 555–6.1.4.) During the later stages of firefighting, as the heat diminishes, endurance for firefighters will increase with on-scene stay times approaching the limit of breathing air available: 20 minutes for a 30 minute air supply and a 10 minutes transit time. Removing FFEs when they no longer are needed for protection from very high temperatures (and wearing engineering coveralls) will reduce heat strain and extend endurance. (See paragraph 555–6.1.5.)

555-8.11.7.2.3 Recuperation of Personnel. After being relieved, attack teams transit to recuperation areas. (See paragraph 555–7.5.10.) Here, firefighters doff their SCBAs and FFEs to allow themselves to cool and replenish

body fluids. For this scenario, the amount of time an attack team recuperates is estimated as twice the time a team spends attacking the fire. Attack times are typically 10 minutes; hence recuperation times are 20 minutes.

555-8.11.7.2.3.1 For this mass conflagration scenario, firefighters return to a recuperation area located in a passageway adjacent to their assigned DCRS. These areas are chosen such that each is aft of frame 65 and should be free from smoke and fire gases. Additionally, electrical power is available aft of frame 65 so lighting is on and ventilation is operable. A fan can be easily placed in a passageway to cool recuperation teams. Additionally, because firefighting is expected to be a prolonged effort, attack teams are expected to be redeployed once they have recuperated. Having the teams in the vicinity of their respective DCRS facilitates reassigning the team.

555-8.11.2.7.4 Managing Reliefs. (See paragraph 555–7.5.10.) The objective is to provide reliefs to sustain an uninterrupted attack on the fires without losing personnel to heat strain. The DCA and repair party leaders must coordinate closely to achieve effective management of reliefs. In a mass conflagration, the management of reliefs must be planned before the reliefs are needed. If reliefs are not requested until after they are needed on the scene, the attack on the fires will not be sustained and control of the fire may be lost. The DCA's assessment at 15 minutes into this scenario (paragraph 555–8.11.2.6) describes some of the factors to consider in planning for reliefs.

555-8.11.2.7.4.1 In this scenario, relieving attack teams which have recuperated are reassigned to the same area as their original assignment, essentially to fight the same fire. This is done to ease the coordination for rotating relieving teams within each repair party. Additionally, once a relief team has become familiar with the route to the attack point, they become proficient in retracing the route. This is especially important for relief teams not normally assigned to a repair party who may not be familiar with the area. To further assist teams not familiar with the area of the ship in which they are fighting the fire investigators from the repair party normally assigned to that area may be of use. Further, because three repair parties are directing attack and relief teams, coordinating recuperation periods and reassignment by the respective repair party is considered to be more efficient and makes it easier to maintain accountability of assigned personnel.

555-8.11.2.8 Evacuation of Personnel. A mass conflagration may necessitate the evacuation of crew or troop living spaces due to untenable conditions caused by heat and smoke. Evacuations may be ordered by the DCA or the repair party leader and conducted by investigators or other repair party personnel. Alternatively, investigators may order an evacuation based on their knowledge of the tenability of the subdivision. The investigator should recommend the evacuation route to the senior person in charge of evacuating the group. The evacuation route should be chosen to provide safe egress and minimal interference with damage control actions. Damage control markings, routes, and labels are posted throughout the ship. Emergency Escape Breathing Devices (EEBDs) should be provided to evacuating personnel and donned as required. In situations where visibility is poor due to smoke, the investigators may be required to assist the evacuating party to the appropriate egress point. After initiation of the evacuation of personnel, the investigator reports the evacuation to the repair party leader. Investigators then continue their walk down.

EVACUATION OF PERSONNEL - DETAILS

Time(min.)	Event and Location
5	Due to smoke and heat from fires below the damage control deck, Repair 2 orders evacuation of DCRS 2 aft to DCRS 5. The evacuation is conducted through the port passageway on the damage control deck. In response to evacuation of DCRS 2, the DCA orders DCRS 5 to assume communications and plots for DCRS 2. The evacuation to DCRS 5 takes two and one-half minutes to complete.
5	Due to a hot deck, approximately 25 marines decide to evacuate living space 3-50-1 prior to arrival of investigators on third deck. The marines take five minutes to ascend up the starboard access trunk, through a watertight hatch to the main deck, and aft.

10	Approximately 100 troops decide to evacuate living spaces 2-50-0 and 2-60-0 to the main deck via the port watertight hatch (2-58-2). The evacuation occurs due to the onset of untenable conditions while investigators are below decks. The evacuation takes ten minutes to complete.
11	Based on the continued accumulation of smoke on the damage control deck between frames 30 and 50 and the concern for vertical fire spread in this subdivision, DCA orders evacuation of DCC (7 persons) to secondary DCC (DCRS 3). The evacuation to DCRS 3 takes seven minutes to complete.
18-1/2	Investigators report heavy smoke in a starboard access trunk, frame 40, main deck. Based on a concern for fire spread to the main deck, RPL #2 directs investigators (at T=20 min.) to evacuate personnel in main deck spaces. Investigators conduct the evacuation using the port and starboard passageways on the main deck. The evacuation takes five minutes to complete.

555-8.11.2.8.1 In situations where investigators have not yet arrived on-scene, the senior person in charge should check exits from a compartment for a safe egress before proceeding with the evacuation. An appropriate exit route must also be determined. Individuals should retrieve EEBDs and follow the damage control markings, routes, and labels on bulkheads and ladders. EEBDs should be donned prior to or during the evacuation as required. The actual time it takes to complete an evacuation will depend on the speed of movement, which is impacted by obstructions, and the number of people to evacuate.

555-8.11.3 SUMMARY. A mass conflagration requires immediate decisive actions to prevent a total loss of the ship. Coordination between repair party leaders and the damage control assistant is essential for effective management of repair party personnel and other resources. Repair party leaders efforts should be concentrated on responding to investigator and scene leader reports of damage. Damage control assistant efforts should be concentrated on responding to the needs of repair leaders and restoring systems required for firefighting.

a. The DCA and RPLs are the key decision makers in a mass conflagration. Their decisions are based principally on reports communicated by sound powered phones and also by portable radio reports from the scene.

b. The effective management of reliefs, by anticipating needs so that reliefs are available when needed, is essential to maintaining control of the fire. This is a complex effort requiring close coordination among the DCA and repair party leaders. In a mass conflagration, damage control personnel probably will need to be augmented by personnel from other organizations within the ship. In this scenario, 60 additional personnel were needed from other organizations.

c. Investigator reports over a portable radio confirmed fire locations, enabling the RPLs to order attack team assignments. Other investigator reports of fire, smoke, hot bulkheads and decks, buckled decks, and jammed doors improved the RPLs' situation awareness.

d. Due to the large number of repair party personnel required during a mass conflagration, efficient use of available resources is required to sustain continued firefighting operations. When the extent of the casualty is too great for the available resources, the ship may have to initially give up fire attack and extinguishment as the primary goals, and resort to control and containment by setting fire boundaries rather than dispatching fire attack teams to extinguish them. However, fire attack and extinguishment of a single weapon hit is the preferred goal and within the intended design capability for U.S. Naval ships.

e. To support the large number of repair party personnel required, there is a considerable amount of personnel protection equipment and other DC equipment used. In order to conserve on the number of FFEs, SCBAs, and radios used, transfer of this equipment may be made when personnel return to their respective staging areas for reassignment or recuperation. Typically, the equipment is transferred to relief teams which are being dispatched.

f. Sufficient investigators should be assigned to cover potential damage areas and report conditions quickly. Repair 2 initially deployed six investigators, augmenting the two assigned with four others knowledgeable of the compartment arrangement in their areas. In this way, attack teams can be dispatched before the fire spreads significantly. Once a general understanding of the damage is obtained, excess investigators can be reassigned to other duties.

g. Attack teams that have extinguished fires in their assigned space should move on to attack fires in adjacent spaces. The scene leader must maintain communication with attack teams to avoid simultaneous attacks in the same space in which actions by one hose team force the other hose team from the scene.

h. Access to fire spaces will have to be gained through jammed doors, by breaking holes in joiner bulkheads, and other means. Scene leaders should have support teams at their disposal to assist attack teams in gaining rapid access to fire spaces.

i. The scene leaders, repair party leaders, and DCA must maintain an overall understanding of the situation. Often, conditions in one fire compartment will hamper effective firefighting in other compartments, particularly compartments above. Consequently, attacks in different compartments will have to be coordinated to gain control of the fires.

j. In situations where personnel from other repair parties are required to function in a space not normally assigned to them, the use of an investigator from the repair party normally responsible for that area will be a valuable tool. This investigator can advise the unfamiliar teams as to the best routes to use to attack a given compartment, the best routes to rig hoses, concerns related to surrounding compartments (i.e. ammunition handling or flammable liquid storeroom) and provide information about an area which the unfamiliar team might not be aware of.

k. Active desmoking routes for particular zones should be pre-planned. Weapons effects or other damage might render the ventilation system unusable, and quickly establishing the ability to reduce smoke from the DC deck and other vital areas will aid in firefighting efforts.

l. Weapon effects may render many fixed protection systems such as seawater sprinkling, AFFF bilge sprinkling, AFFF stations, and Halon systems inoperable. Systems which remain operable may only provide limited protection to a space due to weapon effects such as fragmentation of decks and bulkheads. Operating seawater sprinkler systems may be useful in providing fire boundary coverage. In this case the space should be checked periodically by investigators to ensure the system can maintain the boundary.

m. Caution must be taken while traversing through the ship to avoid exposed electrical cables which may be energized. While some circuits may no longer be energized due to fire and/or weapon effects it is not safe to assume all circuits have lost power. After a weapon impacts the ship, especially if detonation occurs, cables will be hanging from the overhead and care must be taken traversing spaces to avoid electrocution.

n. As was the case in this scenario, it may be required to post multiple boundarymen on a single bulkhead or deck in the same compartment due to its size. In this case, as in the case of boundarymen in adjacent compartments, it may be required that the boundarymen share a hose or hoses. This is due to the number of available fire plugs, persons available to rig hoses, and amount of hose available to fight the fire.

o. Flooding may be an immediate concern, or it may become a concern as firefighting efforts progress. Dewatering efforts must be considered to mitigate the effects of having several fire teams actively combatting a multi-deck fire. This becomes even more important if firefighting efforts are drawn out over a long period of time.

SECTION 9.
FIRE DRILLS AND TRAINING

555-9.1 IMPORTANCE

555-9.1.1 The best organization and equipment is useless without trained personnel. Properly drilled crew men will minimize confusion during fires, increase the probability of proper initial actions taken against a fire, and enhance the predictability of firefighting responses and tactics. Vital to the effort, however, is continuity of personnel. That is, people assigned to the firefighting party should retain that position even if other shipboard duties change. All members of a fire party should be cross trained for at least one other position on the fire party in order to provide frequent rotation. Ideally, everyone on the ship, particularly small ships, should be trained to serve on a fire party since they may be needed to fight a major fire or conflagration.

555-9.2 REQUIRED FEATURES

555-9.2.1 Effective fire drills do not happen automatically. A careless effort will result in useless drills which do not improve the crew's capability, or even bad drills which train poor habits. Each fire drill should include training elements which touch on the phases of firefighting outlined in paragraph 555-7.2. Also, fire drills to provide training in combatting a deep fat fryer fire are needed. These drills will ensure that personnel know how and when to secure the fryer and extinguish the fire. As a firefighting party improves, realism can be incorporated. Time compression is the most important feature to incorporate. A fire can grow from a tiny flicker to a life threatening blaze in a few minutes. Every delay in detection, notification, firefighting, and space isolation could cost a life or another burned out compartment. Drills must be practiced at real time speed. This creates two important conditions: the urgency of the situation, and the inevitable problems with donning personnel protection. Training in the use of SEEDS and EEBD's should be emphasized. Quickly donning the EEBD while ″on the run″ should be stressed as a way of saving time when escaping a fire or smoke-filled space, and improving the chances of survival. The effects of smoke must also be included, including the loss of visibility, the loss of staging areas, the loss of equipment in damage control repair stations which can not be reached, and the extra confusion caused by all the above. Egress training should be provided for all personnel. Drills should be conducted in dark or with trainees blindfolded and emphasis should be placed on ability to locate EEBD's and to don them on-the-move. Loss of primary exits should be simulated to force consideration of secondary exits. The key point to stress is that heat and toxic fumes rise. Stay low, cover exposed skin and crawl if necessary. Section 555-10.2.3 discusses the need to modify drill scenarios to incorporate contingency planning in the event that basic firefighting assumptions are violated. Cascading casualties are also common in fires, as a fire spreads or damages vital services. Realistic, effective drills shall include these effects. Machinery space fires can grow out of control in seconds. For this reason, abandon the space evacuation drills should be conducted. Such drills should emphasize the need to exit using the nearest access or escape trunk on each level, and the need to don an EEBD on the run on the way out. Drills should include functioning in a simulated CBR threat environment. For CPS-equipped ships, drills should simulate breaching and re-establishing CBR boundaries, particularly for machinery space fires in which a total protection zone must be exposed to contamination to fight the fire.

555-9.3 MASS CONFLAGRATION FIREFIGHTING TRAINING

555-9.3.1 In addition to routine repetitive training which hones basic skills, crises training should be structured to stimulate thought on various alternative tactics, both conventional and unconventional, that may be useful in various disaster scenarios. Listed below are candidate firefighting tactics and drills which Fleet units may wish to incorporate into onboard training exercises.

a. Mass conflagration and similar disaster drills should train for worst case scenarios. All crew members, officers and enlisted, should realize that no two disasters will ever be the same and that fires cannot always be fought ″by the numbers″. Success or failure may ultimately depend on the rapid adaptability and creativity of the crew. Assume the ship will rapidly become hot and dark. Propulsion and electric power may be lost. Firemain and communication may be lost in key areas. Firemain ruptures may occur, fire hoses may break, and use of water for firefighting can cause flooding problems and severe list. Slippery decks should be anticipated. Fire and smoke may cause abandonment of Damage Control Central and other vital spaces. Smoke may deny access to portions of the Damage Control Deck and one or more repair stations may not be accessible. Additionally, initial combat damage may result in loss of key supervisory and repair party personnel.

b. In a serious disaster, the survivability of the ship may literally depend on the performance of portable pumps. Periodic training should be conducted on starting and operating portable pumps, especially for scenarios involving high suction lift. See paragraph 555-4.11.2.10 for further information.

c. For major fires, especially where high heat denies access to the fire compartment, boundary cooling of surrounding bulkheads and decks will be essential to prevent horizontal and vertical fire spread. The recommended cooling technique is low flow (50-60 gpm, partially open vari-nozzle), with intermittent bursts of water. Avoid prolonged water discharge to minimize steam exposure to the cooling team. When preplanning cooling evolutions do not overlook the possible need to cool topside deck launchers, ready service rooms, and magazines. See paragraph 555-7.2.7.1 for more information.

d. Anticipate that smoke may be a major problem throughout the ship. Rapid deployment of smoke curtains can effectively retard spread of smoke. Casualty control drills should also consider the likelihood that smoke from major fires may be ingested from the weather into machinery space fresh air intakes. See paragraph 555-7.2.7.2 for more information.

e. During extended firefighting evolutions, drinking water may in short supply, especially if power is lost to potable water pumps. Ship should pre-plan techniques for tapping potable water tanks during power outages.

f. The use of portable chemical light sticks should be incorporated into drill scenarios. See paragraph 555-7.5.12 for more information.

g. Certain anti-ship weapons are fueled by conventional flammable liquids. Training evolutions should emphasize rigging portable AFFF eductors. See paragraph 555-4.10 and 555-9.4.4 for more information.

h. Fires in machinery spaces have yielded lessons learned that should be incorporated in machinery space firefighting training. For fires in gas turbine modules, reflash may occur following initial extinguishment by Halon, due to air movement and leakage that dilutes Halon concentration. Drills should pre-plan techniques for hoseline application of AFFF into the module. Filling fuel tanks with foam during machinery space fires is not recommended. Exterior cooling of fuel tanks with seawater or AFFF spray is preferable. Machinery space fires frequently force abandonment of adjacent machinery spaces due to smoke ingestion. Strategic placement of breathing apparatus can allow key personnel to remain in adjacent smoke filled machinery spaces. Maintaining positive pressure in adjacent spaces in accordance with paragraph 555-10.3.7 will also inhibit smoke ingestion.

i. Past conflagrations have caused failure of air piping, typically due to high temperature failure of silver brazed joints. In some cases the released air has fed the fire. In other cases, the piping failure has caused loss of control air for engines, clutches, propeller pitch adjustment and other vital pneumatic services. Casualty control drills should incorporate isolation of ruptured air lines and use of jumper hoses for feeding critical pneumatic demands.

j. For any major fire in a compartment, fire parties should be alert to the possibility of lingering fires at the overhead, especially where oil soaked lagging or overhead cable runs are present. Cable fires can become

deep seated and multiple applications of water may be necessary to achieve total extinguishment. For electric cables and other potentially energized electrical equipment, firefighting nozzles should be set for a spray pattern with at least a four foot standoff distance.

k. For any situation where large quantities of water have been used for firefighting, or where firemain rupture has occurred, emergency dewatering may require innovation and application of unconventional techniques. Siphon dewatering through hose lengths and opening of sounding tubes to dewater into floodable tanks are examples of emergency dewatering attempts that might be considered for training.

l. Combat induced shock can frequently cause class C fires throughout the ship. This suggests a need for adequate distribution and rapid deployment of CO_2 portable fire extinguishers.

m. For certain situations, the most prudent firefighting procedure may be to button up, keep the surroundings cool, and allow the fire to burn itself out by oxygen depletion. This technique may be useful if the fire compartment is air tight, access for direct firefighting is difficult, or high heat holds firefighters at bay. Class A fires will self extinguish when the oxygen content drops below 12 percent (15 percent for class B). When this technique is used, a lengthy waiting period of several hours should be anticipated to allow compartment temperatures to drop below the ignition temperature of combustible fire gases.

n. Specific guidance for carriers: Flight deck casualty drills should emphasize the location and operation of controls for bomb farm, weapons elevators, and hose reel AFFF systems. Ships are reminded that the bomb farm system cannot be activated from exterior controls on the island unless the enabling switch in Flight Deck Control is in the on position. Additionally, training should be provided on the location and operation of bomb jettison chutes.

o. The potentially large number of burn injuries resulting from a major conflagration can overwhelm ship doctors and corpsmen. Many crew members, especially on larger ships, may have received advanced first aid burn treatment training as members of hometown volunteer fire departments or rescue squads. It is suggested that ships maintain an inventory of specially trained crew members who may be able to assist in first aid burn treatment.

555-9.4 ANTI-SHIP WEAPONS THREATS

555-9.4.1 GENERAL. If a ship is hit, it is likely that a fire will ensue. Experience shows that widespread damage can result from residual fires initiated by burning unexpended propulsion fuel from the incoming weapon. In a typical scenario, the weapon propellant produces a very intense ignition source (flame temperatures for solid propellant are approximately 3500 - 4000°F) which may lead to a long duration, and widespread burning of normal ship contents. For the typical missile hit, the burning propellant serves as the match, while scattered impact debris, such as paper and cardboard, fuels a long burning fire sustained by furniture, mattresses, supply items, electric cable bundles, and wireways. Propellant induced fires can rapidly transition from initial ignition to total involvement of all combustibles in the space. This condition is commonly referred to as ″flashover.″ For cases where fuel tanks or flammable liquid piping has been breached by the weapon hit, time to flashover generally occurs more rapidly than when ordinary combustible materials are involved.

555-9.4.2 MISSILE HITS. For anti-ship weapons, the quantity of propellant induced into the target ship is directly related to launch distance and how much fuel has been consumed enroute. There are three possible scenarios for missile hits:

a. The missile hits the ship with no propellant remaining and the warhead detonates.

b. The missile hits the ship with unexpended propellant remaining and the warhead detonates.

c. The missile hits the ship with unexpended propellant remaining and the warhead fails to detonate.

555-9.4.2.1 In the first case, unless fuel tanks or fuel piping is damaged, it is very possible that no residual fire will ensue. The energy released from the exploding warhead is not sustained long enough to raise the temperature of combustible materials above the ignition point. This was the experience in World War II where some ships hit by bombs suffered severe localized blast damage and yet no fire occurred. In the second case fires will more than likely occur because the energy released from the exploding warhead and unexpended propellant burns long enough to ignite combustible materials.

555-9.4.2.2 Warhead detonation in the second case can create kindling arrays by knocking over shelves, lockers, bunks, and desks, distribute propellant over a wide area, and create holes for entry of combustion air. In the third scenario, where the warhead fails to detonate, the burning propellant may be distributed over a much smaller area, but fires are likely to occur. The tendency for fires to reach flashover will depend on the quantity and arrangement of combustibles in the struck compartment as well as the availability of air for combustion and the quantity of propellant remaining.

555-9.4.2.3 All solid propellants, and some liquid propellants, contain their own oxidizer and can burn without drawing oxygen from the surrounding air. However, all burning propellants produce massive quantities of gaseous by-products. Some of these gases are combustible and, when burning, will reduce the oxygen content of the involved space. More importantly, the gas generated by burning solid propellant creates a temporary overpressure which pushes air from the space. Depending on the size and number of vent openings, this overpressure condition may last for several minutes. During this overpressure condition, while the space is breathing out, the lack of oxygen will prevent combustion of combustible contents in spite of the high temperature created by the burning propellant. Space contents will surface char, but cannot ignite until fresh air is drawn back into the space. If space inbreathing occurs before combustibles cool below their ignition temperature, residual burning and ultimately flashover may occur.

555-9.4.3 FIREFIGHTING PROCEDURES. The following is a summary of recommended firefighting procedures for combatting a propellant fire resulting from a strike by an anti-ship weapon. During the lull period after the hit, while initial overpressure is equalizing and charred contents begin to re-ignite, there may be several minutes for fire parties to prevent transition to flashover. Extinguishment of burning solid propellant will not be possible, though it will probably consume itself before fire parties can arrive anyway. Burning liquid propellant will burn much longer and can be extinguished, in some cases, with AFFF. Speed is of the essence if flashover of the hit compartment is to be avoided. Breathing apparatus should be worn due to high toxicity of combustion gases. Initial firefighting efforts should be directed toward extinguishing small residual fires throughout the space before all contents self ignite. During entry, minimize flow of fresh air into the space. Open doors only wide enough to allow access and, if possible, pass hose through smoke curtains. At all times, be alert to possible burning of overhead cableways. If burning liquid fuel is encountered, use AFFF. If remote from an installed AFFF hose station, use an AFFF eductor and 5 gallon AFFF cans. Should flashover occur, high heat will deny access into the affected space. In that case, button up the flashed over compartment as tight as possible and cool all surrounding bulkheads and decks. Resort to indirect firefighting techniques referred to in paragraph 555-7.6 or wait for the involved space to burn out.

555-9.4.4 AFFF INLINE EDUCTOR INSTALLATION. Ships may wish to consider pre-installing AFFF inline eductors (with adjacent 5 gallon cans of AFFF) on fireplugs in areas of the ship remote from installed AFFF hose stations. This would permit fire hose stations, normally intended for class A firefighting, to be rapidly used for fighting class B fires. Additionally, training evolutions involving portable AFFF eductors should emphasize that the 150 foot hose length restriction does not apply where the nozzle is deployed below the level of the eductor.

When an AFFF eductor is rigged on a deck above the deck where the fire is being fought (as in machinery space re-entry), up to six lengths of hose (300 feet) can be connected downstream of the eductor.

555-9.5 VITAL ELECTRONICS SPACE FIREFIGHTING TRAINING

555-9.5.1 In developing training scenarios for firefighting in vital electronics spaces, emphasis should be placed on fires that generate large volumes of smoke and require a high degree of coordination and decision making. Fire scenarios should include the following:

a. A local fire in a manned space in which operating personnel wearing breathing apparatus, if necessary, can remain and fight the fire.

b. A local fire in an unmanned space which the initial response personnel can enter without breathing apparatus.

c. A local fire in an unmanned space which can only be entered by personnel wearing breathing apparatus.

d. A local fire in a manned or unmanned space which, after initial response, develops space conditions requiring evacuation.

e. A fire or smoke condition in a manned or unmanned space which does not permit entry, or requires immediate evacuation.

f. Smoke in an electronic space caused by fire outside the space.

g. Fire outside threatens an electronics space.

555-9.5.2 As the state of training becomes more advanced, more complex scenarios in which several electronics spaces are affected in different ways should be used. See FXP-4, Chapter 9 for a group of exercises in the area of electronics casualty control. See paragraph 555-8.8 for more information.

555-9.6 CRITIQUE

555-9.6.1 Critiques after every fire drill will help ensure that the maximum learning takes place. They should delve into the underlying causes for successful or failed drills. They should include a thorough discussion of the rationale for each decision made on attack points, ventilation, etc.

SECTION 10.

MACHINERY SPACE FIREFIGHTING DOCTRINE FOR CLASS B FIRES IN SURFACE SHIPS

555-10.1 PURPOSE

555-10.1.1 The purpose of this doctrine is to provide NAVSEA guidance for machinery space class B firefighting procedures and clarify the role various firefighting systems may play in such a fire. This doctrine delineates the tactics, philosophy and procedures associated with the use and operation of ship systems in combatting machinery space fires.

555-10.1.2 Flow charts (Figure 555-10-1) and a glossary of terms are provided at the end of this section. The flow charts trace the steps associated with procedures in the doctrine. The flow charts show the preferred sequence of events and are not intended to prevent use of alternatives when appropriate.

555-10.2 INTRODUCTION

555-10.2.1 This doctrine is structured to provide a basis for proper actions and decisions regarding a machinery space fire. It will discuss fire prevention, firefighting systems capabilities and limitations, considerations necessary in choosing the correct firefighting equipment, and the actions that must be performed inside and outside of the affected space. This doctrine will discuss these issues in relationship to a major oil leak, a class B fire, and a fire which grows out of control. It is presented in a manner to allow ship's force to properly identify the phase of a machinery space fire and how best to deal with it.

555-10.2.2 The doctrine defines personnel responsibilities and scenarios that can easily be developed for use in individual machinery space fire doctrines on most ships, but will not be applicable in every case. The ship's machinery space firefighting doctrine and associated equipment isolation and controls lists shall be made readily available in Damage Control Central, Main Control or Central Control Station, Repair Five, Pilothouse and each machinery space. There can be no substitute for prudent, common sense, on-the-scene decisions which may dictate variations to this guidance. Restricted maneuvering policies of each ship may require departure from this guidance.

555-10.2.3 Crew members must train not only with standard fire scenarios but with more challenging scenarios. Scenarios should be modified so that contingency planning is exercised, full awareness of spaces and systems affected by the fire is demonstrated, and basic assumptions are violated. The basic assumptions for the standard fire scenario are:

1. Effective mechanical and electrical isolation is achieved.
2. The fire is contained within set boundaries to a single machinery space.
3. Controls for remote shut down are available and operational.
4. Communication is established and maintained for effective damage control and command and control efforts.
5. Firemain water supply is adequate and the firemain is intact.
6. Damage control supplies are adequate.
7. The Damage Control Deck is tenable and repair stations manned.
8. Personnel are trained and know their ship.

555-10.2.4 These basic assumptions provide standard approaches to fighting main engineering space fires. However, investigations of machinery space fires highlight the need to plan and train for contingencies. Examples of cases where actual fires did not follow the standard scenario are:

1. Local and remote fuel shut-down controls were not accessible.
2. Access hatches remained open and were not approachable.
3. Damage Control Deck was not tenable, with fire and smoke forcing Repair 5 to be abandoned.
4. Electrical power was interrupted.
5. All normal communications were lost.

Once the basic scenarios are mastered, more challenging drills should be implemented into the crew's training to prepare them for the unique challenges of fire at sea.

555-10.3 DISCUSSION

555-10.3.1 PREVENTION. The following principles shall be enforced to reduce fire hazards.

1. The Engineer Officer, his principal assistant(s) or Fire Marshal shall make regular and frequent inspections including but not limited to the items discussed in (2), (5), and (6) below and report conditions to the Commanding Officer.
2. Properly stow and protect all combustibles.
3. Test and inspect flammable systems after repairs.
4. Educate all personnel in the reduction of fire hazards and perform frequent fire drills.
5. Enforce fire prevention policies and practices.
   - a Maintain flange shields on those flammable liquid pipe lines where required.
   - b Maintain proper covers on flammable liquid strainers and keep sounding tube caps in place and isolation valves closed. Ensure all flammable liquid sounding tubes terminating in machinery spaces are properly equipped with ball check valves, isolation valves, and sounding tube caps.
   - c Immediately stop oil leaks and repair.
   - d Wipe up spilled or leaked oil.
   - e Keep ventilation ducts free of oily residue.
   - f Keep bilges free of oil and trash.
   - g Prevent stockpiling of excess or unauthorized flammables.
   - h Ensure uptake spaces are not used as storerooms for combustible materials.
6. Properly maintain all firefighting equipment.
7. Operate and maintain systems and equipment according to authorized plant procedures.
8. Properly maintain all machinery space damage control closures and fittings.

555-10.3.2 FIREFIGHTING SYSTEMS CAPABILITIES AND LIMITATIONS. All ships are provided with one or more of the firefighting systems or equipment types described below. Each has capabilities and limitations which shall be known and understood by firefighting personnel to ensure quick and proper selection of equipment. It shall be noted that Halon 1301 is the primary firefighting agent for extinguishing class B fires in machinery spaces of surface ships except for those cases where the fire can be extinguished by hand held equipment.

555-10.3.2.1 Water (Firemain System). The firemain system must be kept intact so that water is available for cooling and the production of Aqueous Film Forming Foam (AFFF). Water is useful for cooling hot bulkheads in those spaces adjacent to the fire and extinguishing ordinary combustible (class A) fires. When a hose line attack is needed to extinguish a flammable liquid fire and AFFF is not available, high velocity water fog may be used. However, time to fight the fire will be longer, more firefighters will be needed, increased fire damage can be expected, and a greater risk of reflash will be present.

555-10.3.2.2 Carbon Dioxide. Carbon dioxide (CO_2) portable extinguishers are used primarily for small electrical fires (class C) and have limited effectiveness on class B fires. Their use shall be confined to class B pool fires no greater than four square feet. Successful operation requires close approach due to the extinguisher's characteristic short range (4 to 6 feet). Fixed CO_2 hose reels are used to extinguish electrical fires in large switch-

boards in nuclear and electric driven ships. Although not required on all ship types, CO_2 hose reels can be used if installed to extinguish fires in switchboards and generators.

555-10.3.2.3 Potassium Bicarbonate. Potassium bicarbonate (PKP) is a dry chemical agent stored in portable extinguishers. PKP discharged from portable extinguishers is highly effective on pool fires. PKP is very effective on localized (less than 10 square feet) isolated class B fires. Caution should be exercised when using PKP, to avoid breathing difficulties, reduced visibility, and discharging into electrical equipment.

555-10.3.2.4 Aqueous Film Forming Foam. AFFF is a surfactant foam produced by mixing water with AFFF concentrate and can be applied either from hose reels inside or outside the space, a separate fireplug and hose with an inline AFFF eductor, or from bilge sprinkling. It is effective on bilge fires to vapor secure surfaces, prevent large scale reflash, and for use during space reentry. When a hose line attack is made to extinguish a flammable liquid fire, AFFF shall be used unless expended or out of commission. In this event, use of water fog is acceptable.

555-10.3.2.5 Aqueous Film Forming Foam Bilge Sprinkling. AFFF bilge sprinkling is a fixed fire extinguishing system designed to permit rapid extinguishment of bilge fires. This system is often installed in conjunction with Halon 1301. AFFF bilge sprinkling should be used to (a) prevent a fire by vapor securing a major oil leak in the bilges, (b) independently extinguish bilge fires, either with personnel remaining in the space or with the space abandoned, and (c) minimize the potential for reflash. When the AFFF supply is limited to a 50-gallon tank, care shall be exercised not to deplete the 50-gallon tank when using the bilge sprinkling system. AFFF bilge sprinkling shall be operated when a major oil leak occurs.

555-10.3.2.6 Halon 1301. Halon 1301 is a gaseous, total flooding, multi-level fire extinguishing system designed to extinguish oil spray and deck fires in and above the ship's bilges that force the machinery space to be abandoned. This system shall be operated as soon as the decision is made to evacuate the space. For those ships with a two shot capability, the second shot is used, if needed, to combat reflash fires or to furnish uninterrupted fire protection. Operation of the Halon system will activate visual and audible alarms and automatically shut down space ventilation, including dampers, where installed.

555-10.3.3 CONSIDERATIONS NECESSARY IN CHOOSING CORRECT FIREFIGHTING EQUIPMENT. The proper choice of firefighting equipment should be based on an on-the-scene estimate of the situation. This estimate should be done quickly and should take into consideration the volume of flammable liquid release and its form (atomized or spilled); the area occupied by the flammable liquid (confined or unconfined); the ability to quickly secure the oil source; and how rapidly flame, heat, and smoke are threatening firefighting and escape. The following general guidelines are provided for consideration when selecting the proper class B firefighting equipment.

555-10.3.3.1 Small Pool Fires (Less Than 10 Square Feet). Use readily accessible portable PKP extinguishers, AFFF hosereel, or CO_2 portable extinguishers (which shall not be used on fires greater than 4 square feet). For pool fires greater than 10 square feet see paragraph 555-10.3.5.3.

555-10.3.3.2 Oil Spray Fires. An oil spray fire can quickly grow out of control and require evacuation after evaluation of the fire. Securing the fuel source is the single most important step in controlling an oil spray fire. An oil spray fire resulting from the ignition of atomized flammable liquids, which cannot be quickly and completely secured, should not be attacked. Loss experience and fire testing have demonstrated that a pressurized release of a flammable liquid can create a fire that is unapproachable. Life threatening conditions created by

extreme heat, smoke, and toxic gases can occur, especially on the upper level, in as little as 60 seconds. Under such conditions the only prudent action, time permitting, is to secure the propulsion plant, and evacuate in accordance with paragraph 555-10.3.6.2. Oil spray fires may occur around fuel and lube oil strainers, recently repaired flanges and valves, and flexible line failures. An oil spray fire can grow out of control within seconds. Such fires are commonly fueled by an oil source which cannot be quickly and completely secured. Fires which spread to overhead insulation and cables, or which produce sufficient products of combustion (flame, heat, smoke, and gases) can also force space evacuation. Where installed, Halon and AFFF bilge sprinkling shall be used immediately upon the decision to evacuate, and AFFF bilge sprinkling shall be activated again before reentry. Use of AFFF bilge sprinkling before reentry will establish a fresh foam blanket and protect against an unsecured fuel source.

555-10.3.4 MAJOR OIL LEAK SCENARIO. Any major flammable liquid leak presents an immediate hazard which should be dealt with quickly to reduce the threat of fire. An oil leak which forms a spray can ignite when it comes in contact with any hot surface or equipment capable of arcing. Rapid securing of the oil source and the use of AFFF to cover liquid surfaces will greatly reduce the risk of fire. The following general guidelines are provided for dealing with a major oil leak.

555-10.3.4.1 Report the Leak. The leak should be immediately reported to the Space Supervisor and the Engineering Officer of the Watch (EOOW) to allow for concurrent action.

555-10.3.4.2 Man Foam Proportioning Station. Man the machinery space foam proportioning stations upon notification of major oil leak in the space.

555-10.3.4.3 Secure the Source. The leak should be stopped as quickly as possible. This can be done locally or remotely by closing system cutout valves or shutdown valves, thereby isolating the leak. Even the application of a rag or bucket can significantly reduce the flow of oil and deflect it away from hot surfaces.

555-10.3.4.4 Apply Aqueous Film Forming Foam. Hydrogen sulfide gas may be released to the space atmosphere during the discharge of AFFF. See paragraph 555-2.7.10 for associated potential health hazards. Activate the AFFF hosereel to remove oil accumulation on deckplates or bulkheads and wash oil into the bilge. Water may also be used. Rags that have been used for cleanup shall be placed in a suitable container. Discharge AFFF into the bilge to cover liquid surfaces and prevent ignition of the oil. Installed AFFF foam systems should be used that most effectively deal with the casualty. In some scenarios, the oil leak may discharge directly into the bilge. In others, the oil leak may discharge onto the deck plates and then into the bilge. Therefore, the decision to use either a hose, a sprinkling system, or both, as well as which to apply first, must be made by the watchstanders to ensure that the oil is flushed to the bilges and covered with AFFF. The AFFF hose reel is used to remove oil accumulation on deckplates or bulkheads, and wash it into the bilge. AFFF bilge sprinkling is used to ensure all bilge surfaces are vapor secured. The time required to achieve a complete foam blanket shall be determined and incorporated into the ship's doctrine. If the required time is not known, or AFFF must be conserved then operate bilge sprinkling for one minute.

555-10.3.4.5 Concurrent Action. As time and personnel permit, the following concurrent actions should be accomplished.

1. Secure operating machinery as necessary in the vicinity of the leak to control the casualty.
2. Start or maintain equipment in unaffected spaces to maintain propulsion, electrical power, and firemain pressure.

555-10.3.4.6 Remove the Oil. Pump bilge to the oily waste holding tank or overboard as conditions permit.

555-10.3.5 CLASS BRAVO FIRE SCENARIO. A class B fire can result from any pooled oil and can quickly develop from an oil spray or atomized fuel. The following guidelines are provided for a class B fire.

555-10.3.5.1 Report the Fire. The fire should be immediately reported to the Space Supervisor and EOOW to allow for concurrent actions. When fire or smoke is reported, as soon as firefighting and plant securing efforts allow, personnel in the space should obtain and carry an Emergency Escape Breathing Device (EEBD). EEBD's are designed for escape only and shall not be used for firefighting purposes. See paragraph 555-10.3.9 for actions concerning breathing protection when a CBR threat exists.

555-10.3.5.2 Man Foam Proportioning Station. Man the machinery space foam proportioning stations upon notification of a fire in the space.

555-10.3.5.3 Size Up the Fire. Assess the size and location of the fire. If the source of fuel can be secured quickly and the fire is localized, activate AFFF hose reel(s) and/or PKP extinguisher(s) and attack the fire. The range of a PKP extinguisher is 20 feet. In addition to toxic products of combustion in the space atmosphere, hydrogen sulfide gas may be released during the discharge of AFFF. See paragraph 555-2.7.10 for associated potential health hazards.

555-10.3.5.4 Secure the Oil Source. The leak should be stopped as quickly as possible. This can be done locally or remotely by closing system cutout valves or shutdown valves, thereby isolating the leak. Even the application of a rag or bucket can significantly reduce the flow of oil and deflect it away from hot surfaces.

555-10.3.5.5 Concurrent Actions. Personnel in the affected space should concentrate on securing the source of oil and extinguishing the fire; they can take other actions as time and personnel permit. Actions assigned to personnel outside the affected space should be accomplished as soon as the fire is announced and appropriate stations are manned. The following concurrent actions should be accomplished:

a. Activate AFFF bilge sprinkling, where installed, until the bilge fire is out. Where AFFF bilge sprinkling and hoses have a common supply from a 50-gallon tank through an FP-180 proportioner, simultaneous use of hoses and bilge sprinkling shall be avoided.

b. Start or maintain equipment in unaffected spaces to maintain propulsion, electrical power and firemain. Secure the plant and operating machinery in the affected space.

c. Set ventilation according to the following:

   1 In Affected Machinery Space:

      (a) Set negative ventilation (exhaust on high and supply on low).

      (b) On ships with interlocked fans and remote controls with emergency exhaust button (remotely located in EOS or at access on ships without EOS) set emergency exhaust (exhaust on high and supply off).

      (c) On ships with fans interlocked through a local master switch but with independent control on controllers inside the space, set negative ventilation.

      (d) On other ships with interlocked fans the ventilation system shall remain operating.

   2 In Unaffected Machinery Spaces:

      (a) Set positive ventilation (supply on high and exhaust off). Setting positive ventilation is intended to prevent smoke on the damage control deck from entering unaffected spaces.

(b) On ships with fans interlocked through a local master switch inside the space but with independent control on controllers, set positive ventilation.

(c) On other ships with interlocked fans the ventilations system shall remain operating.

(d) If smoke is pulled into adjacent machinery spaces from the weather, shift ventilation supply to intakes on opposite side of ship if installed, maneuver the ship to clear the vent intakes, or secure ventilation. On CPS-equipped ships, smoke can clog ventilation supply filters. Clogged filters will reduce CPS overpressure and degrade protection and may force shutdown of ventilation supply fans. Watchstanders may require breathing apparatus or Emergency Air Breathing Masks (EAB's) to prevent premature evacuation of unaffected spaces because of smoke.

(e) On CPS-equipped ships when a CBR threat exists, do not set positive ventilation in unaffected machinery spaces. Maintain normal ventilation to avoid spreading CBR contamination from the limited protected machinery space to adjacent total protected zones and to minimize gaseous contaminant accumulations in the machinery space. The DCA may order positive ventilation based on an evaluation of the effects of smoke entering the space and the nature of the CBR threat.

d. Isolate the affected space with the exception of firefighting equipment, lighting, and ventilation. See paragraph 555-10.3.8.

e. Set fire and smoke boundaries around the affected space to prevent the spread of fire and smoke throughout the ship. The ship may want to get general quarters and material condition ZEBRA to facilitate the complete isolation of the affected space and the rapid establishment of fire and smoke boundaries. In setting boundaries, consideration should be given to the trade-off between impeding personnel egress versus spread to smoke to unaffected spaces. Machinery space access hatches must be closed quickly to prevent spread of heat and smoke to the Damage Control Deck. Balanced (Ellision) doors can not be relied on to serve as a fire barrier because pressures generated in machinery space fires may cause the doors to open, and high temperature can melt through aluminum doors and vestibule boundaries. If unable to operate hatch closures, throw a smoke curtain over the hatch opening and keep the curtain wet. As a reminder, main accesses are normally classified ″Zebra″, alternate accesses are normally classified ″Yoke″, and escape scuttles shall be ″X-Ray″ or ″Circle X-Ray″.

f. CBR considerations.

1 Typically in ships equipped with a collective protection system (CPS), machinery spaces have a lower level of CBR protection than other spaces in the ship. Evacuation and firefighting actions may compromise the CPS boundary between the affected machinery space and the total protection zones in which accesses to the affected machinery space are located. Therefore, as soon as a machinery space fire is reported, personnel in total protection zones in which accesses to the affected machinery space are located should don CBR protective gear appropriate to the CBR threat level and the contamination likely to occur in a machinery space.

2 The anticipated sequence of events when a CBR threat exists and a fire is reported in a machinery space normally would be as follows:

(a) First, personnel in total protection zones with accesses to the affected machinery space don CBR protective gear.

(b) Second, fight the fire, set fire and smoke boundaries, isolate the space, etc.

(c) Third, if necessary, evacuate the machinery space.

(d) Fourth, evaluate the situation with respect to the CBR threat as well as the fire. Continue with firefighting and re-entry.

(e) Fifth, if CBR boundaries are considered necessary, re-establish CBR boundaries around the pressure zone affected by the fire. When areas protected from CBR contamination are determined to be clear, personnel in protected areas may return to the mission oriented protective posture (MOPP) level appropriate for protected areas and the CBR threat level.

3 Paragraph 555-7.13 provides guidance on CBR boundaries, ventilation systems and smoke control for ships equipped with a collective protection system (CPS) when a CBR threat exists. Ships without a CPS may be able to apply some of the techniques discussed in paragraph 555-7.13 to mitigate the consequences of a CBR threat.

4 Ships should conduct fire drills simulating various CBR threats and protective postures and simulating fire-fighting where CBR contamination exists. Where the ship design supports establishing zones that are clear of CBR contamination when a CBR threat exists (such as a CPS), drills should include setting CBR boundaries.

555-10.3.6 OUT-OF-CONTROL CLASS BRAVO FIRE SCENARIO. A class B fire, especially one that has burned for a period of time or is fed by an unsecurable oil source, can be out of control within seconds. When this happens, operating machinery and the plant should be secured and the space evacuated. In addition, the following guidelines are provided for consideration when faced with an out-of- control fire.

555-10.3.6.1 Size of the Fire. If the fire occupies a large area, is fed by an oil source which cannot be secured, or is threatening firefighting and escape, the space should be evacuated. Even a small fire, if not extinguished rapidly, can generate large volumes of smoke and toxic gases that can force a space to be evacuated.

555-10.3.6.2 Evacuation. Once the decision is made by the EOOW or Space Supervisor to evacuate the space, Halon and AFFF bilge sprinkling shall be activated if installed, and all personnel should don their EEBD and exit using the nearest safe access. If, at any time, life threatening conditions inhibit the watchstander's ability to locate and immediately don an EEBD, he should utilize the belt-worn Supplementary Emergency Egress Device (SEED) as described in **NSTM Chapter 077** . The watchstander should use the SEED and proceed to the nearest exit. He should obtain an EEBD, if possible, if not already shouldered. The EEBD should be donned when out of danger of immediate harm from heat or flames, if a breathable atmosphere cannot be reached using SEED. Because the SEED lacks protection for the eyes and nose and has a short operational time, it is a supplemental device. However, it is immediately available and is easily operated on the run. Factors to consider when using these devices include (a) how quickly conditions are deteriorating, (b) ease of egress, including travel time to a breathable atmosphere, (c) operating times for each device, and (d) capabilities and limitations of each device. Do not breathe through the nose and breathe only through the mouth when using the SEED. EEBDs and SEEDS shall not be used for firefighting purposes.

555-10.3.6.2.1 Non-CBR Threat Environment. Access doors, hatches and scuttles shall be secured when all personnel are out of the space. At this time, ventilation in the affected machinery space shall be secured for ships without Halon. The escapees should congregate at a safe, predetermined location outside the space, where EEBDs can be removed and a muster taken. History indicates that the damage control deck is not always a safe haven. A safe location is outside fire and smoke boundaries or a weather deck.

555-10.3.6.2.2 CBR Threat Exists. If protective masks are already being worn, switch breathing protection from MCU-2/P protective masks to EEBDs; an MCY-2/P protective mask does not protect against carbon monoxide nor does it provide oxygen. See **NSTM Chapter 077** for guidance on switching breathing protection. Access doors, hatches and scuttles shall be secured when all personnel are out of the space. At this time, ventilation to the affected machinery space shall be secured for ships without Halon. The escapees should congregate at a predetermined location outside the space, where EEBDs can be switched for appropriate breathing protection (MCU-2/P protective mask or breathing apparatus) and a muster taken. The significant factors to consider in determining where escapes should congregate are as follows:

a. Evacuees should congregate outside of designated smoke and fire boundaries.

b. Generally, evacuating to a predetermined location inside the ship would be preferred because it generally poses less of a CBR threat to evacuating personnel than exiting to the weather. The CBR threat should be evaluated and as evacuating personnel arrive at the location, they should be evaluated and directed to either a decontamination station, medical, a safe area of the ship or duty as the situation dictates. The evacuation route may become contaminated.

c. On ships not equipped with CPS, breathing protection must be maintained while at MOPP Level 4. Escapees will need to switch from EEBDs to either a MCU-2/P protective mask or a breathing apparatus before the EEBD's 15 minute supply of oxygen runs out.

d. On CPS-equipped ships breathing protection should be maintained consistent with the protection required in the machinery space until an area of the ship which is known to be clear of contamination is reached. Total protection zones that have accesses to the affected machinery space should be considered contaminated by the evacuation.

555-10.3.6.2.3 Muster Location. Ships should designate a location for evacuees to congregate for each machinery space considering the foregoing factors. Different locations may be designated for use when a CBR threat exists than for use when there is no CBR threat. In any case, the location should be outside of designated fire and smoke boundaries for the affected machinery space.

555-10.3.6.2.4 AFFF Operation. To prevent running the system dry, operate AFFF bilge sprinkling no longer than 4 minutes. In no case operate the system when the concentrate level in the tank sight glass is not visible. Immediate manning of the AFFF proportioner station is essential to expedite tank replenishment.

555-10.3.6.2.5 Notification. The EOOW and Repair Five Party Leader shall be notified that the following actions were taken:

a. Lighting to space has remained on.

b. Ventilation to the space has been shut down.

c. Halon and AFFF bilge sprinkling have been activated, if installed. Halon system activation should be verified by checking that pressure switches have operated.

d. The space is evacuated and all personnel are accounted for.

e. The Space Supervisor has completed briefing the Repair Party or Scene Leader on the location of the fire and plant status.

f. All remote actuators have been operated to verify system isolation. Verify that the damage control deck cut-out valve to the AFFF hosereel stations located in the affected space has been secured.

g. If a CBR threat exists, the status of the potential contamination in the space (if known), the status of contamination of surrounding areas and the contamination of personnel.

555-10.3.7 SMOKE CONTROL. Smoke control is comprised of the following areas.

555-10.3.7.1 Ventilation. The operation of ventilation systems is described where required in this doctrine. Each ship shall supplement its doctrine with a list of fans and their controls to be secured for a designated fire

and buffer zone. Weather deck supply intake and exhaust discharge locations shall be listed. The location of controllers, their designation and area served shall also be listed.

555-10.3.7.2 Smoke Boundaries. Due to the large volume of dense smoke that typically is produced by class B fires, inner and outer smoke boundaries shall be set quickly around accesses to the affected space. Smoke boundaries shall be set using structure that is at least fume tight. Both inner and outer smoke boundaries shall be set as described in paragraph 555-7.2.7.2. For class B fires in machinery spaces, the area between the inner and outer smoke boundaries is designated the buffer zone and shall be a dead-air space. The dead-air space is established by securing ventilation fans serving the buffer zone and by closing appropriate ventilation dampers, if installed. Only personnel with breathing apparatus should enter the buffer zone once it is established. Breathing apparatus should be activated when smoke is present or when ordered by the scene leader. Each ship shall supplement its firefighting doctrine with a list of designated smoke boundaries for machinery spaces.

555-10.3.7.2.1 Once a machinery space has been evacuated, fire and smoke boundaries should be maintained. Establishing positive air pressure on the damage control deck to control smoke by breaking condition ZEBRA in transverse fire and smoke boundaries and opening accesses to unaffected spaces is not recommended. Paths for fire spread from the affected space to unaffected spaces by way of the damage control deck will exist. At the time of reentry, firefighters may encounter a backdraft explosion or an intensifying fire as accesses to the affected space are opened and hot fire gases are relieved onto the damage control deck. Firefighters should use caution to position themselves to the side of the access when the door, hatch, or scuttle is initially opened.

555-10.3.7.2.2 Active Desmoking. Active desmoking is removing smoke and heat from the buffer zone prior to extinguishing the fire, to aid firefighting efforts and reduce smoke spread in the ship. Active desmoking is not required for all fires. Active desmoking may be conducted at the scene leader's discretion using procedures described in paragraph 555-7.7. Active desmoking shall not delay machinery space firefighting reentry efforts. There is a very low probability of an explosive atmosphere in the buffer zone above the LEL. In general, it is considered safer to ventilate the buffer zone to prevent buildup of an explosive mixture of fuel vapors rather than secure the space, which can potentially create a fuel-rich environment.

555-10.3.8 SPACE ISOLATION. The complete isolation of systems listed below in the affected space, with the exception of lighting, is necessary to prevent a fire from intensifying due to the addition of flammable liquids and oxygen, and to reduce the electrical hazards. Each ship shall supplement its doctrine with a list of local and remote controls (valves, switchboards, circuit breakers, and so forth), for rapid space isolation. The designation, location, function and area served by each control shall be provided. The following areas shall be considered when isolating the space.

555-10.3.8.1 Mechanical. Every effort shall be made to secure and isolate those systems, machinery, and tanks that have the potential to feed or otherwise contribute to the intensity of the fire. These include, in priority, those systems where action should first be taken.

a. Fuel transfer, service, and stripping pumps and centrifugal purifiers

b. Fuel systems, storage and service tanks

c. JP-5 systems

d. Lube oil pumps and centrifugal purifiers

e. Hydraulic systems

f. Lube oil tanks

g. HP, LP, and bleed air systems

h. Air compressors

i. Steam systems

j. Damage control deck cutout valve to AFFF hosereel station

555-10.3.8.1.1 When initiating action to secure and isolate the foregoing, the following factors shall be considered.

555-10.3.8.1.2 Not all of the above have remote securing or isolation capability. As such, much local securing or isolating shall be accomplished as soon as possible together with the start of firefighting actions. As a minimum, local securing of systems shall include tank and bulkhead boundaries. Familiarity with location and type of local securing and isolating capabilities, and casualty control procedures such as those contained in the Engineering Operational Casualty Control (EOCC), **NSTM Chapter 079, Volume 3** , and applicable propulsion plant manuals are required.

555-10.3.8.1.3 Where remote capability is provided for any of the above, it is most likely located within or immediately adjacent to the access to Engineering Operating Station (EOS), Central Control Station (CCS) and Damage Control Central (DCC), and at the access to the machinery space on the damage control deck. Ensure system isolation by visual or operational verification of all remote actuators.

555-10.3.8.1.4 Care shall be exercised to prevent cascading casualties to equipment in unaffected spaces necessary to maintain propulsion, electrical power, and firemain pressure. Steam and air systems, air compressors, and fuel tanks located close to space boundaries are of particular concern. Communication with other machinery spaces is essential to minimize the potential for cascading casualties.

555-10.3.8.2 Electrical. Complete electrical isolation will be very difficult due to the sheer number of cables within and transiting any given space. To the extent possible, all electrical equipment, with the exception of lighting, shall be secured outside the affected space at the ship's service, IC and emergency switchboard, load center, or distribution panel. The switches, circuit breakers, and fuses necessary to do this shall be clearly identified.

555-10.3.8.3 Fire Boundaries. Fire boundaries shall be established around the affected space to confine the fire and ensure designation of adjacent spaces to be observed for hot bulkheads. These boundaries are generally the watertight bulkheads and decks immediately adjacent to the affected space. The minimum degree of tightness for a fire boundary is fume tight. The ship may designate the setting of material condition ZEBRA, in whole or in part, or general quarters to rapidly establish fire boundaries. Each ship shall supplement its doctrine with a list of designated fire boundaries for machinery spaces. Fire boundaries should be monitored for indication of heat or fire extension across the boundary, and manned as appropriate. Re-entry should not be delayed for purposes of placing hoses at fire boundaries.

555-10.3.8.4 Fuel Tanks. Transfer of fuel to a safe location to remove fuel contents puts the empty fuel tank at maximum risk to fire. Therefore, transfer of fuel from the fire area should not be attempted. Adding water to eliminate the vapor space in a fuel tank is not recommended because experience indicates that ignition has not occurred in fuel tanks are highly unlikely, and no accurate method exists to verify that the vapor space has been

eliminated. In addition, the fuel tank will become contaminated with seawater. In summary, the only action necessary to prevent tank contents from contributing to a machinery space fire is to isolate and secure the fuel system.

555-10.3.9 PERSONNEL PROTECTION AND FIREFIGHTING EQUIPMENT. The proper use of personnel protection and firefighting equipment is required to reduce the risk of injury and facilitate extinguishing the fire. Some general considerations for those individuals who enter the space are the following.

555-10.3.9.1 Breathing Protection.

555-10.3.9.1.1 General. Breathing apparatus (OBA's or SCBA's) (with voice amplifier if on ship's allowance list) should be worn by all personnel within buffer zone or when entering the affected space until the atmosphere is certified safe. When smoke is present, breathing apparatus activation should be ordered by the repair locker leader and reported to damage control central.

555-10.3.9.1.2 CPS-Equipped Ships When a CBR Threat Exists. See **NSTM Chapter 077** for guidance on switching breathing protection when a CBR threat exists. See paragraph 555–6.1 for guidance on adjusting personnel protection. During the fire in a machinery space when a CBR exists, the following breathing protection should be used:

a. As soon as the fire is reported, protective masks shall be donned by all personnel in total protected zones in which accesses to the affected machinery space are located. This action is to protect personnel from CBR contaminants that could enter a total protected zone as the affected machinery space is evacuated.

b. Protective masks may be removed in spaces on the protected side of a CBR boundary once it is determined that the CBR boundary is secure and the protected zone is clear of CBR contaminants.

c. Protective masks or breathing apparatus shall be worn in areas not protected from CBR contamination.

d. Breathing apparatus shall be worn inside smoke boundaries to provide oxygen and to protect against smoke, other combustion products and CBR contaminants.

e. Personnel escaping from the affected machinery space shall don EEBDs for evacuation then change to the breathing protection (breathing apparatus or protective mask) required for the area of the ship in which they congregate after evacuation; see paragraph 555-10.3.6.2.

555-10.3.9.2 Clothing. Firefighter's ensemble shall be appropriately prepositioned to be readily available to fire party personnel when the fire party is called away. Personnel required to wear the firefighting ensemble are listed in **NSTM Chapter 077** , paragraph 077–4.3.5. See paragraph 555–6.1 for guidance on adjusting personnel protection. Support personnel such as phone talkers, plugmen, electricians, and medical personnel, outside the fire boundary, shall wear battle dress uniforms as described in **NSTM Chapter 077, Section 5, Utility Clothing** . Firefighting personnel exposed to a CBR threat should wear the firefighter's ensemble or appropriate CBR protective gear; see paragraph 555-6.1.7 and **NSTM Chapter 470** .

555-10.3.9.3 Hoses. As a minimum a single attack 1-1/2 inch AFFF hose, with vari-nozzle, shall be used by the reentry team. The hose and nozzle provide added protection for the nozzleman and hose tenders. Before the single attack hose enters the space, a second backup attack AFFF hose should be manned and charged to render assistance. When assigned by the scene leader, the attack team will be led by an attack team leader. The second hose shall be supplied from an in-line eductor, high capacity or low capacity foam station. The in-line eductor is

designed to only work with a 95 gpm vari-nozzle. Sufficient distance shall be maintained between the first and second hoses to prevent maneuverability and firefighting progress from being impaired. The scene leader decides what resources are needed, including the need for an attack team leader, a second hose to enter the machinery space and a NFTI. In as much as reentering the space may be a lengthy and awkward process, conserving AFFF shall be considered. Seawater hoses may, therefore, be used to cool access doors, hatches, and scuttles, but the seawater hose should not enter the space where it will impair the effectiveness of the AFFF. To conserve AFFF, hoses equipped with in-line eductors can discharge seawater if pickup tubes are removed from AFFF 5-gallon cans. The eductor will continue to function with reinsertion of the pickup tube into the AFFF containers.

555-10.3.9.3.1 Two hoses advancing simultaneously delay fire extinguishment. A second hose creates problems for the lead nozzleman such as impaired visibility, increased heat stress and delay in approaching the fire.

555-10.3.10 REENTRY. Reentry to a machinery space that has been evacuated because of fire is the most critical part of the firefighting evolution and potentially the most dangerous. The primary function of the reentry team is to attack and extinguish the fire, ensure the source of oil is secured and cool the space so ventilation may be started. The general guidelines for consideration upon reentry are as follows:

a When Halon and AFFF bilge sprinkling have been activated:

1 If a check of the conditions in the affected space described in 4. below indicates that the fire has not been extinguished and continues to grow after Halon discharge, operate the second shot of Halon, where installed.

2 Operate AFFF bilge sprinkling a second time for at least 2 minutes before reentry to prevent the possibility of an unsecured fuel source having degraded the initial foam blanket.

3 Reentry shall be attempted at the following times:

(a) If the evidence is that the fire is extinguished by Halon, report fire contained. Do not attempt reentry for at least 15 minutes after discharge of Halon, if effective.

(b) If only AFFF bilge sprinkling is installed, or if the evidence is that Halon has not extinguished the fire, reentry should be attempted as quickly as possible after the space is evacuated and mechanically isolated. Electrical isolation with the exception of lighting will be completed as specified in EOCC immediate actions. Electrical isolation, although ongoing, should not delay space reentry.

4 Reentry should be made through the access, main door, hatch, or escape trunk, whichever is not obstructed by the fire. In some instances escape trunks may be preferable to main accesses for re-entry purposes since the trunk can provide a protected path to get below the fire where temperatures will be cooler and air will be clearer. See paragraph 555-7.14.6. The conditions in the affected space should be checked if possible before entry by:

(a) Feeling bulkheads for temperature near the desired access.

(b) Monitoring exhaust vent discharge for smoke.

(c) Monitoring conditions through the EOS windows or peephole in escape trunk doors. The NFTI cannot be used for this purpose because the NFTI cannot see through glass.

5 After reentry to the space, fires shall be extinguished. Report when the fire is out, reflash watch is set, and fire overhauled. Ensure all sources of fuel are secured and covered with AFFF. To conserve AFFF, saltwater hoses should be used to cool the space after the fire is out. It should be assumed that the AFFF hosereels in the space have been damaged by the fires and they should not be relied on until it can be established that the system has not been damaged by fire.

b. When Halon and AFFF bilge sprinkling is not installed:

1 Reentry should be attempted as quickly as possible after the space is evacuated and mechanically isolated.

Electrical isolation, with the exception of lighting, shall be completed as specified in EOCC immediate actions. Electrical isolation, although ongoing, should not delay space reentry.

2 Reentry should be made through the access, main door, hatch, or escape trunk, whichever is not obstructed by the fire. The conditions in the affected space should be checked before entry by feeling bulkheads for temperature near the desired access, monitoring exhaust vent discharge for smoke, and monitoring operating conditions through the EOS windows or peephole in escape trunk doors. The NFTI cannot be used for this purpose, because the NFTI cannot see through glass.

3 Repeated efforts may be necessary to gain access to the space. The nozzleman uses the reentry AFFF hose wide-angle fog to cool metal surfaces and protect himself. It should be assumed that AFFF hosereels in the space have been damaged by the fire and they should not be relied on for use until it can be established that the system has not been damaged by fire.

4 Once inside the space, locate and extinguish fire, report fire out, set reflash watch, and report reflash watch set. Overhaul the fire. Secure and cover all flammable liquids with AFFF. Allow the space to cool. To conserve AFFF, saltwater hoses should be used to cool the space after the fire is out.

555-10.3.11 DESMOKING, ATMOSPHERIC TESTING, DEWATERING, REMANNING. After the fire is out, the space shall be made safe and ready for remanning. A reflash watch shall be posted with AFFF to quickly extinguish any fire which may reignite. The following general guidelines are provided.

555-10.3.11.1 Desmoking. When a flammable liquid fire has been extinguished, combustible gases may be present. Operating electric controllers to start fans may ignite these gases. Desmoking with the installed ventilation system can proceed with minimal risk when the fire has been extinguished and overhauled, AFFF bilge sprinkling has been operated, the source of fuel secured, the space allowed to cool, all fuel washed into the bilges, and no damage sustained to the electrical distribution system.

555-10.3.11.1.1 Clearing the space of smoke should commence as soon as the space has cooled sufficiently so that there is no danger from reignition. Circuit breakers and other protective devices which tripped automatically shall be left in the tripped position until system damage has been assessed. Examine the electrical distribution system and if possible reestablish power to the installed ventilation fans. If fully operational, run all fans on high speed for a minimum of 15 minutes to remove smoke and toxic gases. If the installed system is partially or fully inoperable, desmoking will take longer, but can be accomplished by using portable blowers, operable installed fans, or positive pressure from adjacent spaces and opening access to the affected space. The safest way to desmoke machinery spaces on ships without Halon and AFFF bilge sprinkling is to exhaust with portable blowers, or to use positive pressure from adjacent spaces. These methods minimize the risk associated with igniting flammable liquids that have not been vapor secured with AFFF.

555-10.3.11.2 Atmospheric Testing. Desmoking shall precede atmospheric testing because combustible gas analyzers will not operate reliably in a Halon atmosphere, and oxygen analyzers will not operate reliably if the sensor is exposed to excessive moisture or comes in contact with particulates found in post-fire atmosphere. When the space is clear of smoke, test for oxygen, combustible and toxic gases. The level of oxygen, as referenced in **NSTM Chapter 074, Volume 3, Gas Free Engineering** , shall be between 19.5 to 22 percent, combustible gases shall be less than 10 percent of the lower explosive limit, and all toxic gases below their threshold limit values before the space is certified safe for personnel without breathing apparatus. Shipboard personnel authorized to conduct postfire atmospheric tests for the purpose of certifying the space safe for personnel are Gas Free Engineers and Gas Free Engineering Petty Officers. After a flammable liquid fire has been extinguished, toxic gas tests for hydrocarbons, carbon dioxide, carbon monoxide, hydrogen chloride, and hydrogen cyanide are required. If Halon 1301 has been discharged, a test for hydrogen fluoride shall also be conducted. If AFFF has been discharged, a test for hydrogen sulfide, shall be conducted. Tests should be conducted near the center and

all four corners on each level. At least one satisfactory test must be obtained at each location tested. Instruments used shall be approved by National Institute of Occupational Safety and Health, Mine Safety Health Administration, or have been approved in NSTM. In a CBR environment tests in accordance with **NSTM Chapter 470** also shall be performed. See **NSTM Chapter 470** for decontamination methods if the space has been exposed to CBR contamination. For additional information, see paragraph 555-7.10.3.

555-10.3.11.3 Dewatering. Dewater space with the Commanding Officer's permission and according to operating procedures. Dewatering for class B pool fire shall not be commenced prior to completion of fire overhaul to prevent fire reflash due to disturbance of the AFFF film on pooled flammable liquid except in extreme emergencies where ship stability is threatened. In such cases, extreme caution must be exercised to ensure the AFFF blanket is maintained until after the fire has been overhauled. Following fire overhaul, dewatering may be conducted/completed concurrently with desmoking and/or post fire gas free testing.

555-10.3.11.4 Remanning. Once the space is certified as safe, remanning can begin. Operation of equipment and deisolation of mechanical and electrical systems shall be considered only after a careful assessment of damage.

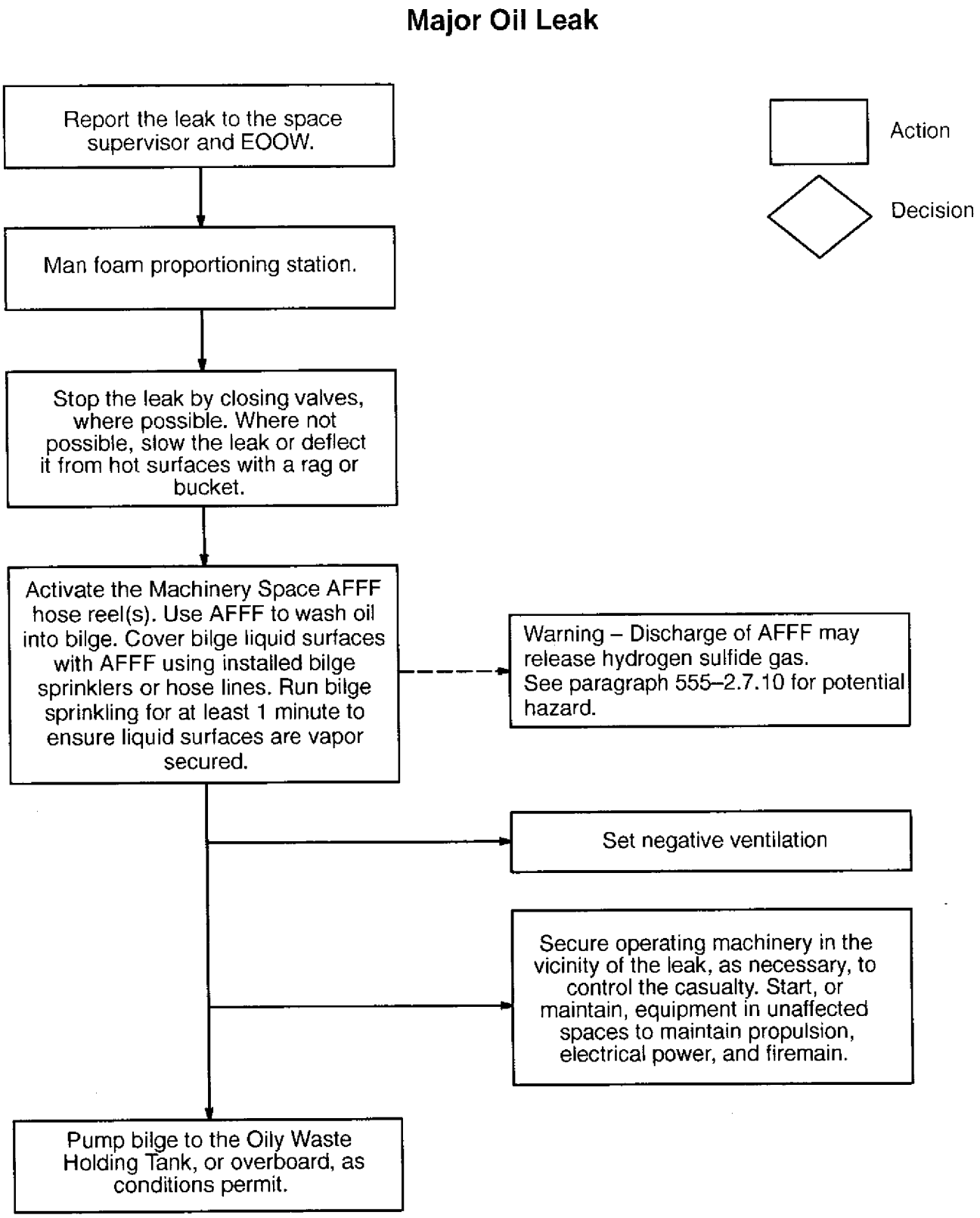

Figure 555-10-1 Procedures in a Class Bravo Fire (Sheet 1 of 9)

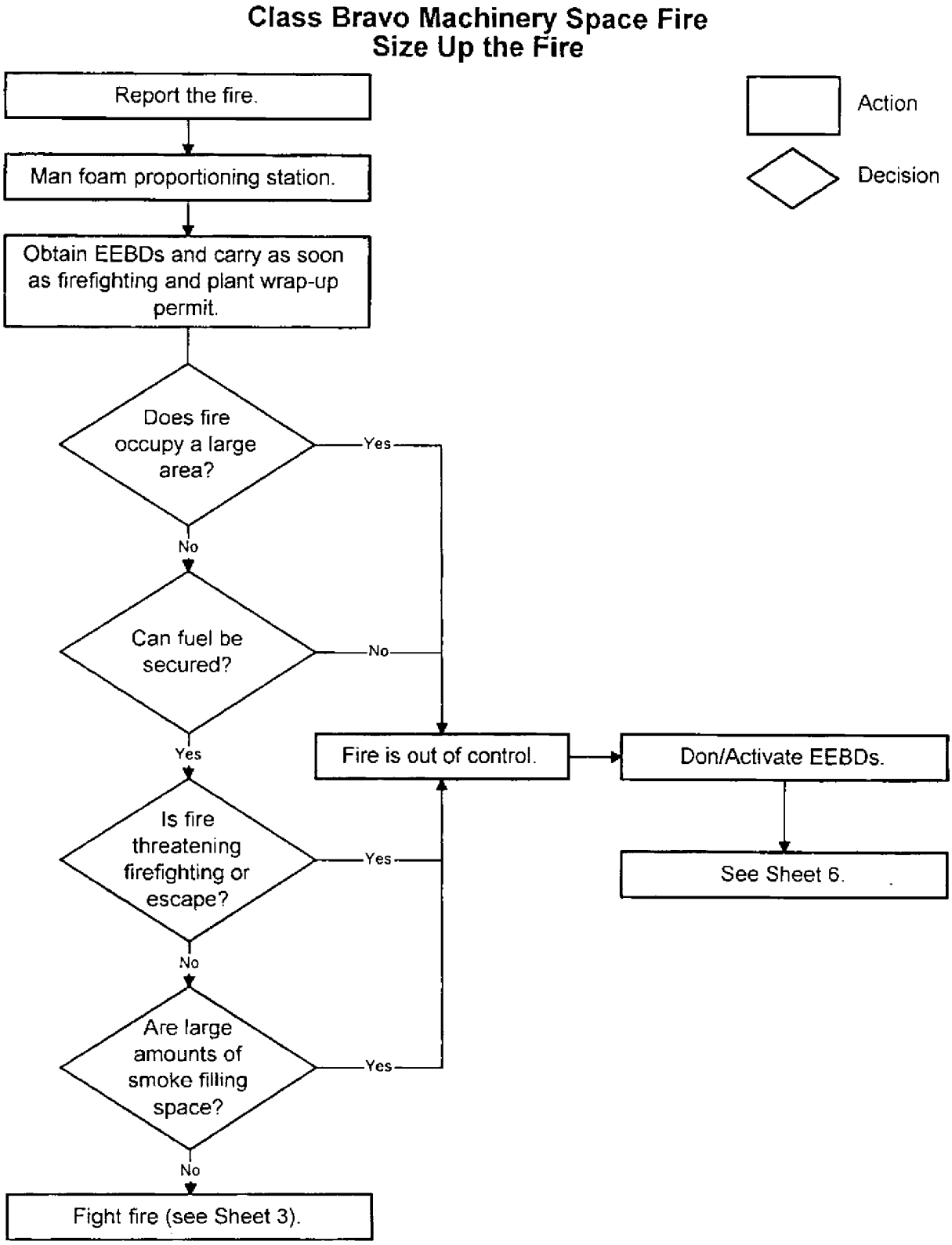

Figure 555-10-1 Procedures in a Class Bravo Fire (Sheet 2 of 9)

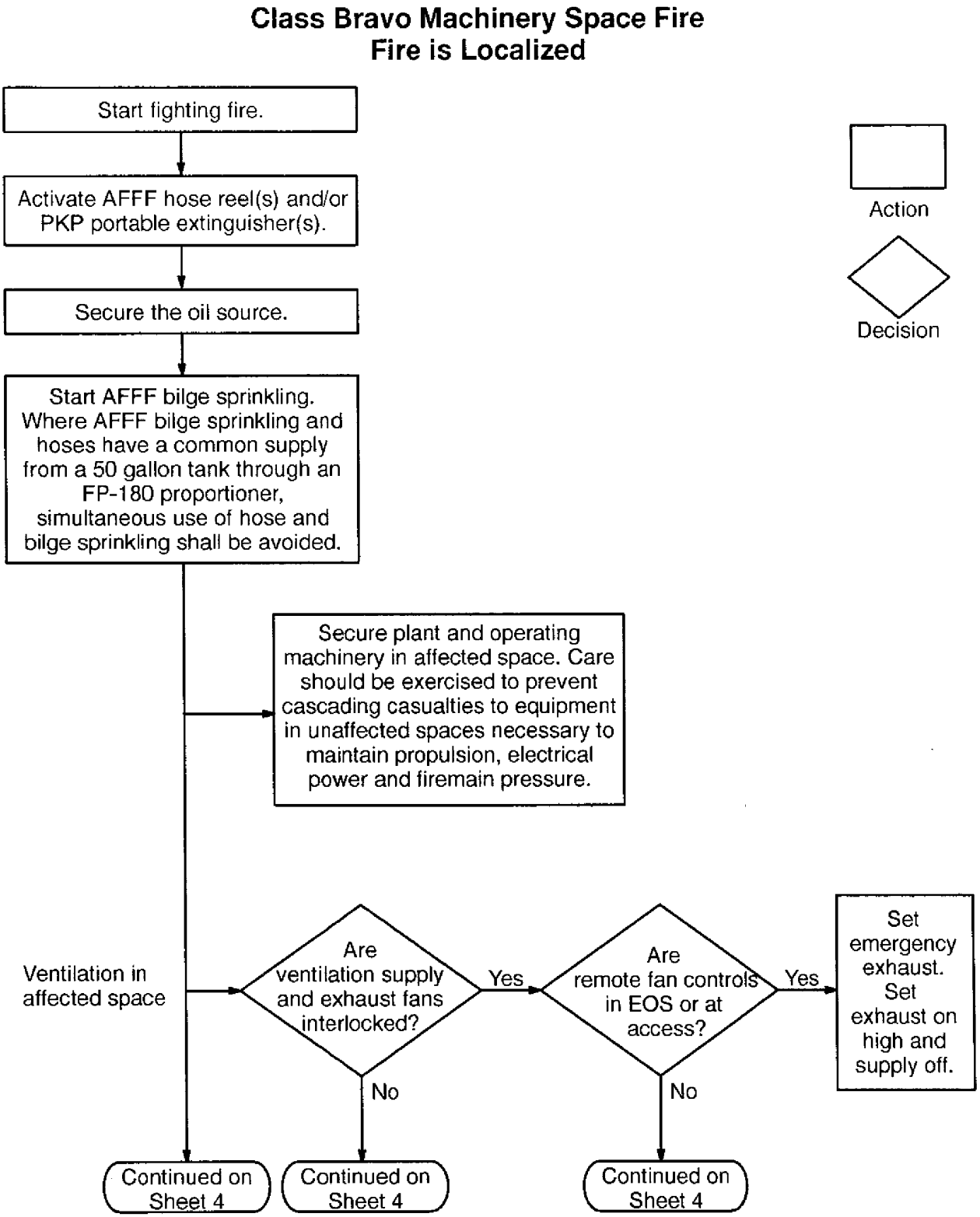

Figure 555-10-1 Procedures in a Class Bravo Fire (Sheet 3 of 9)

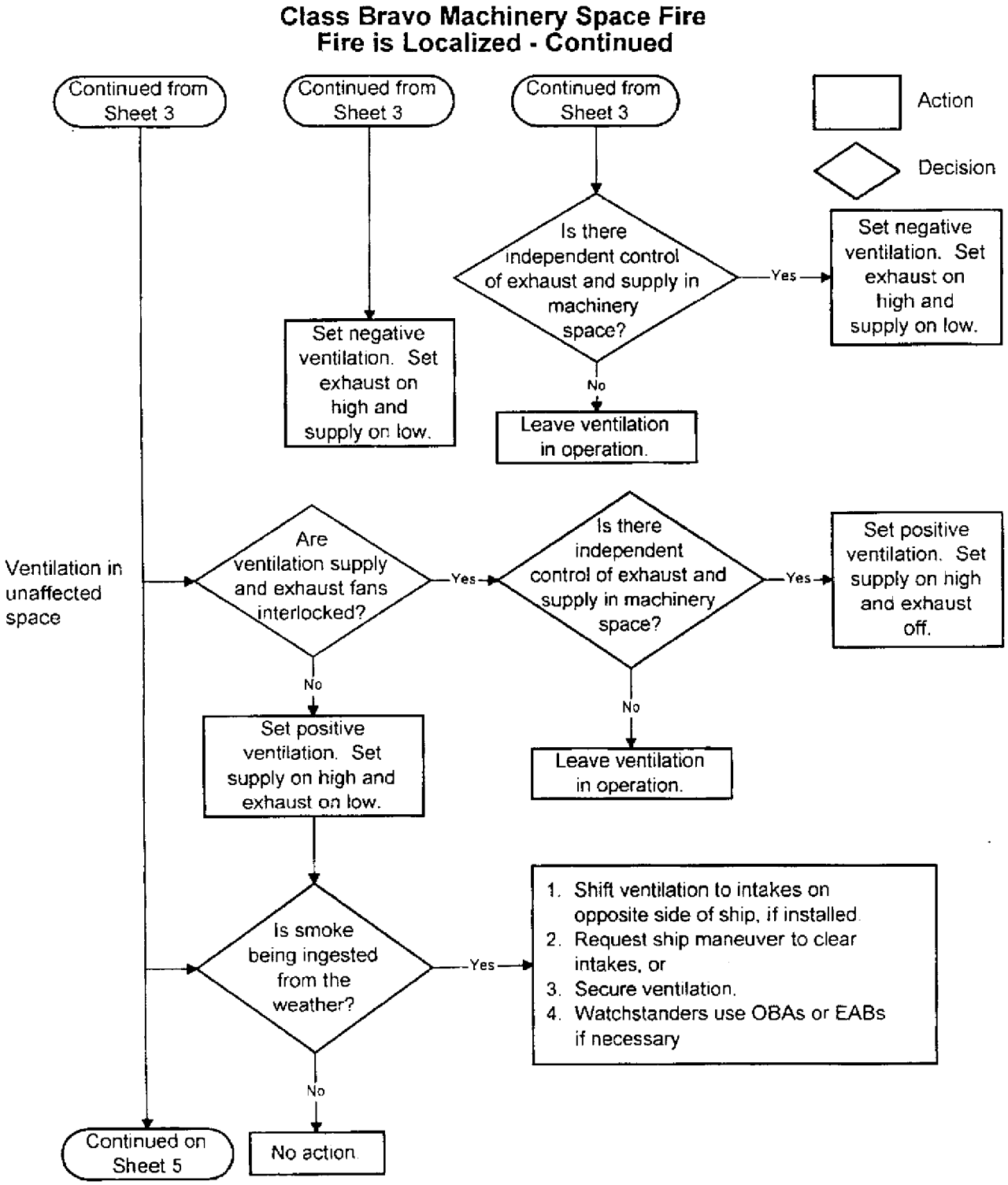

Figure 555-10-1 Procedures in a Class Bravo Fire (Sheet 4 of 9)

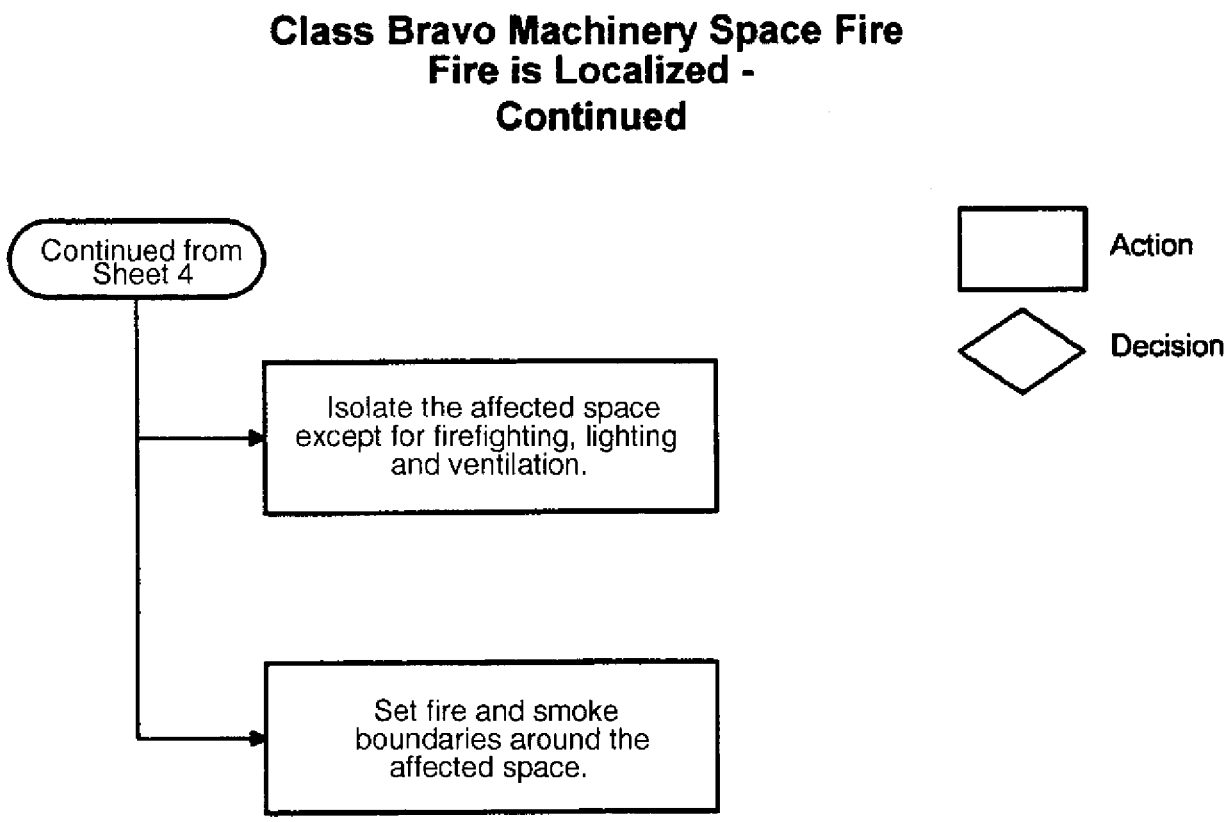

Figure 555-10-1 Procedures in a Class Bravo Fire (Sheet 5 of 9)

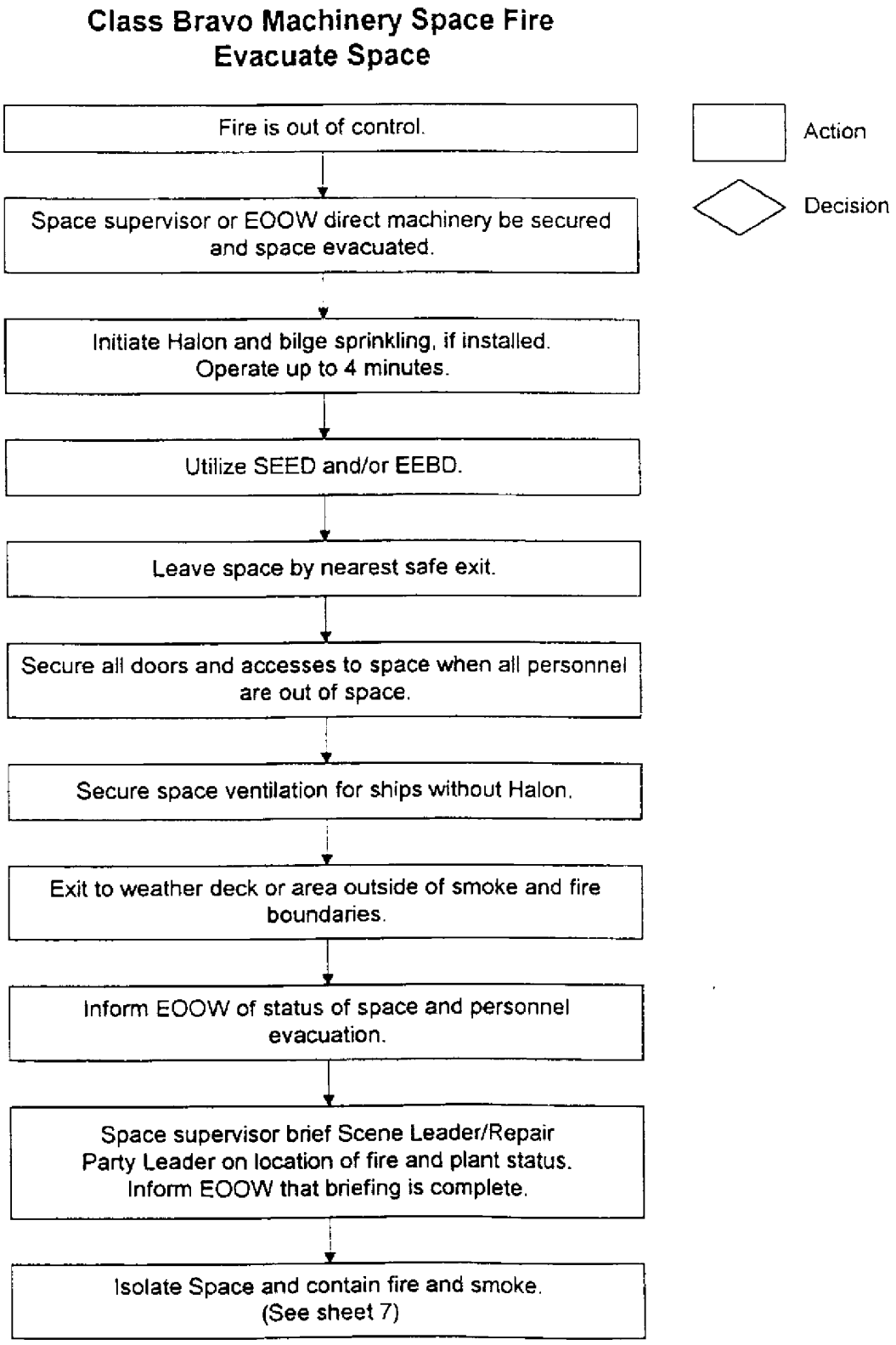

Figure 555-10-1 Procedures in a Class Bravo Fire (Sheet 6 of 9)

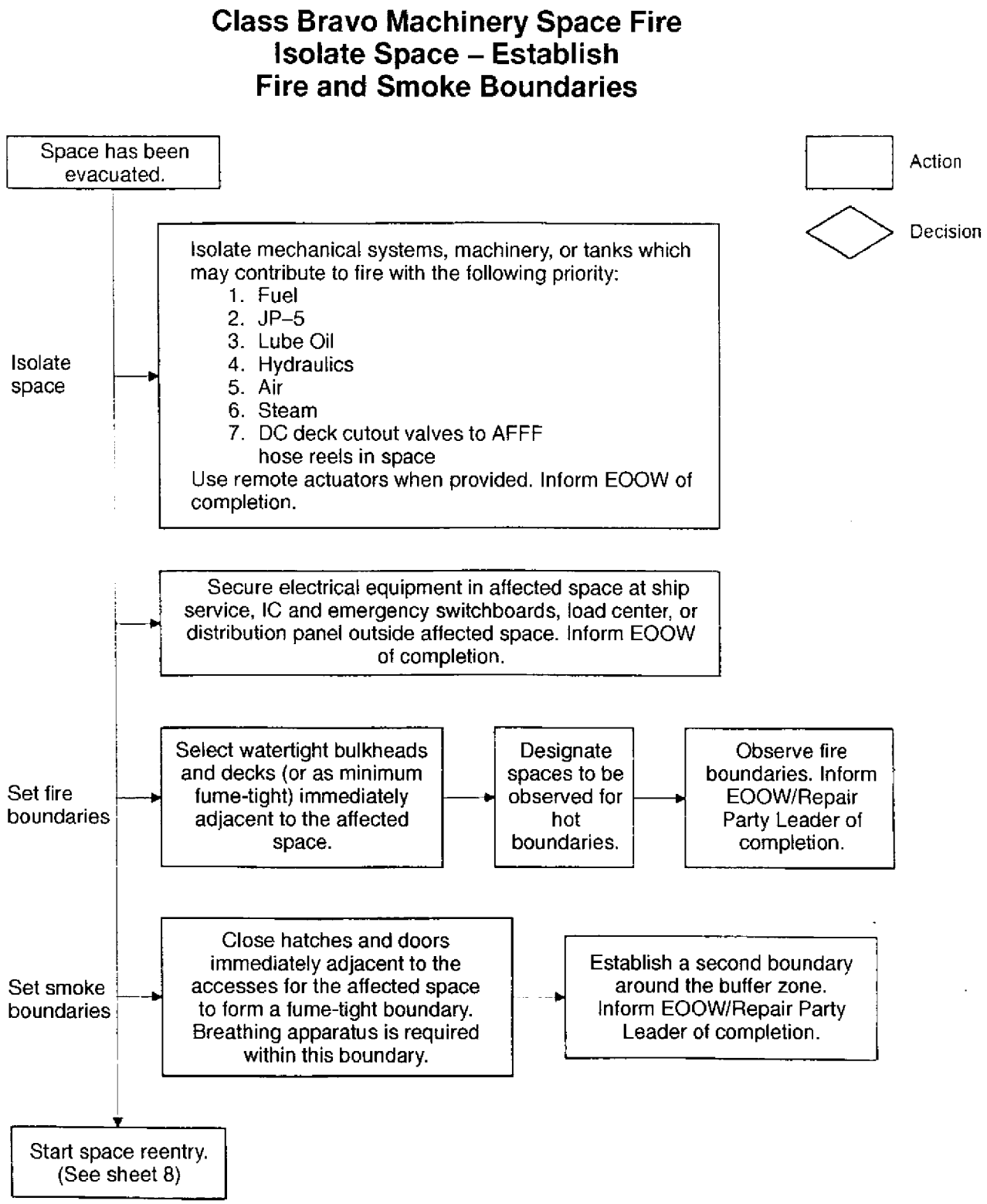

Figure 555-10-1 Procedures in a Class Bravo Fire (Sheet 7 of 9)

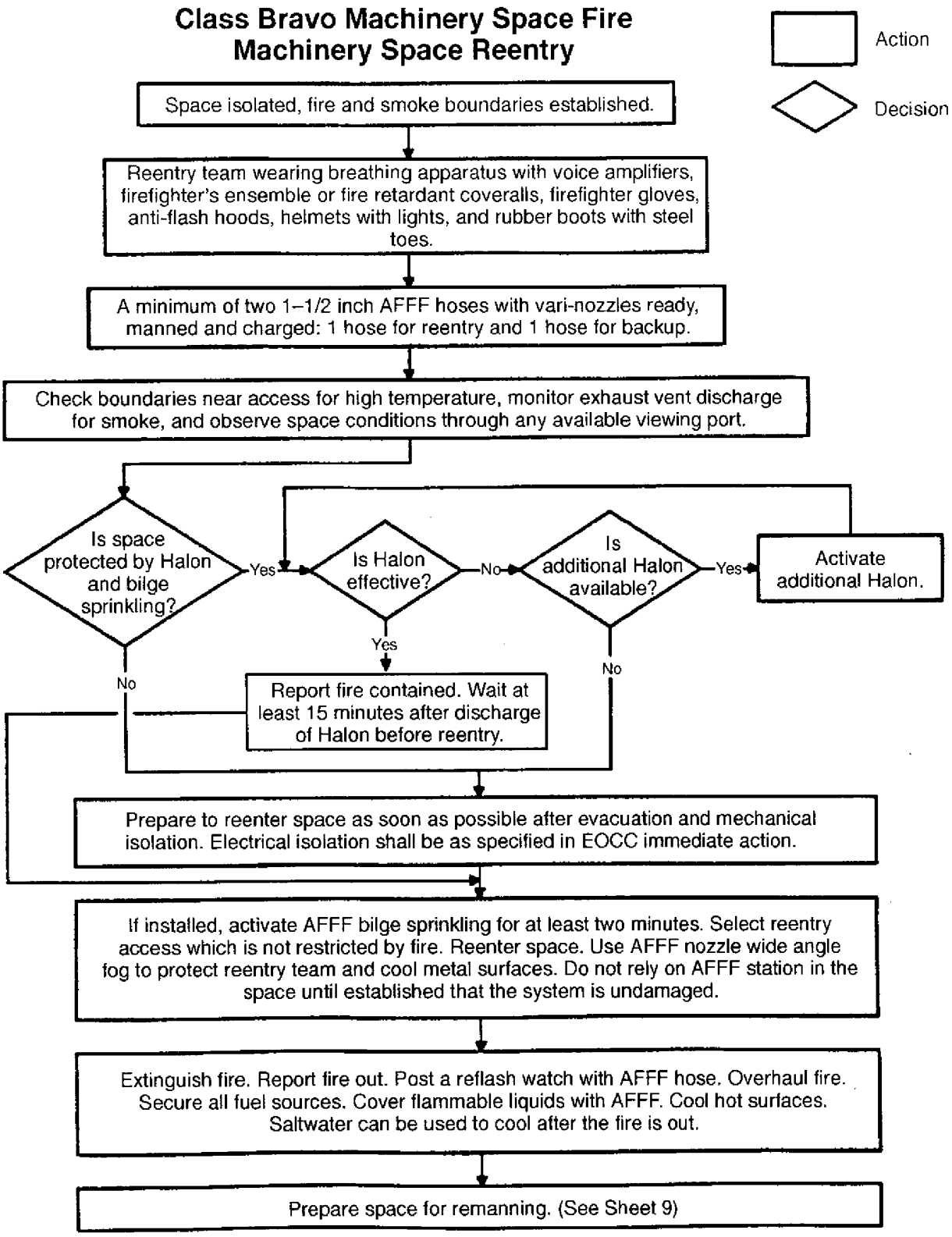

Figure 555-10-1 Procedures in a Class Bravo Fire (Sheet 8 of 9)

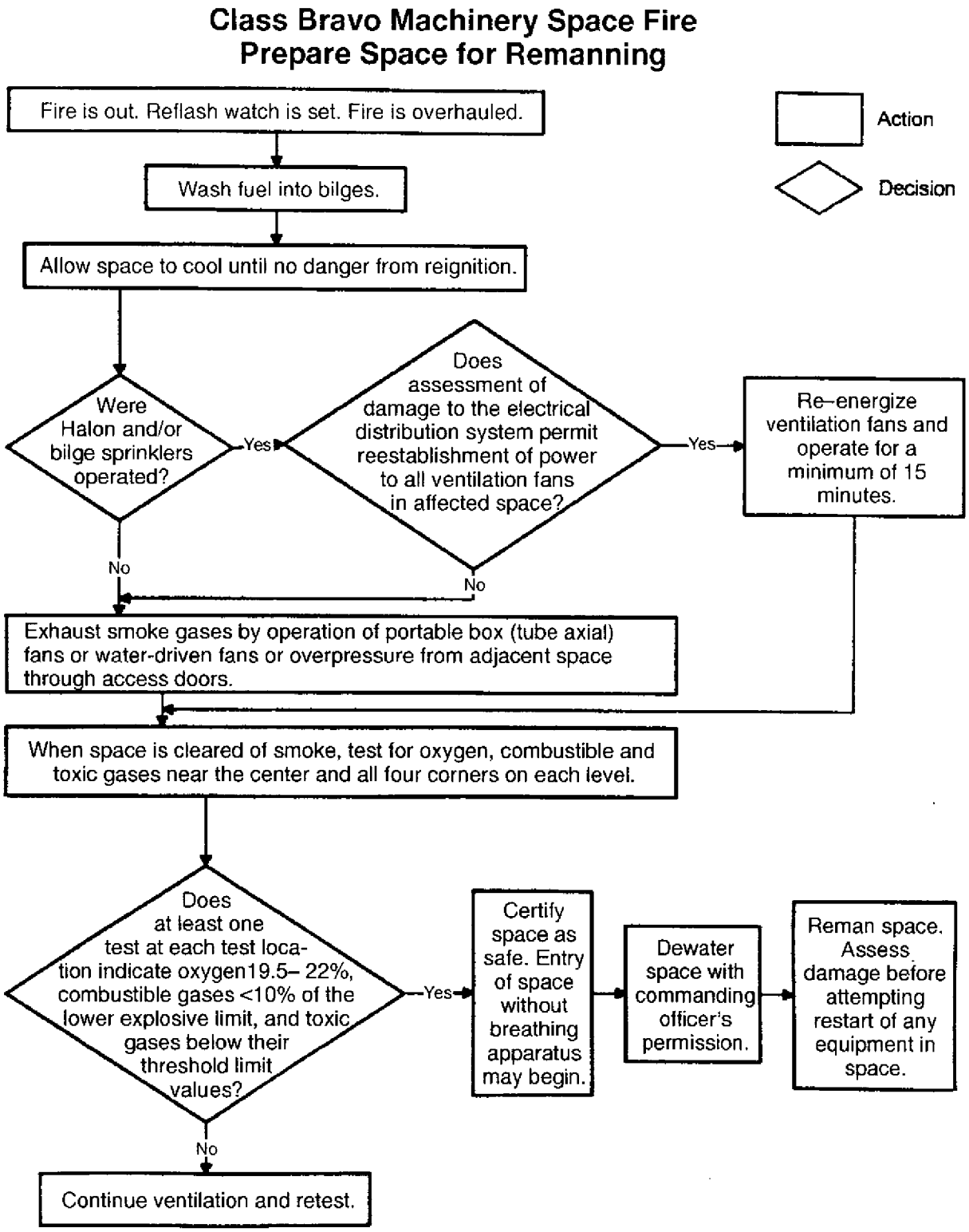

Figure 555-10-1 Procedures in a Class Bravo Fire (Sheet 9 of 9)

APPENDIX A.

LIST OF ABBREVIATIONS

AFFF - Aqueous Film Forming Foam

APC - Aqueous Potassium Carbonate

CBR - Chemical, Biological and Radiological

CO_2 - Carbon Dioxide

CONFLAG - Conflagration Station

CPS - Collective Protection System

DCA - Damage Control Assistant

DCRS - Damage Control Repair Station

ECC - Electronics Casualty Control

EEBD - Emergency Escape Breathing Device

FFE - Firefighter's Ensemble

HSD - Heat Sensing Device

LEL - Lower Explosive Limit

MOGAS - Motor Gasoline

MOPP - Mission Oriented Protective Posture

NAP - Navy All Purpose (Nozzle)

NFTI - Naval Firefighter's Thermal Imager

OBA - Oxygen Breathing Apparatus

PKP - Potassium Bicarbonate Dry Chemical (formerly Purple-K-Powder)

PRP - Pneumatically Released Pilot (Valve)

RPL - Repair Party Leader

SCBA - Self-Contained Breathing Apparatus

SEED - Supplementary Emergency Egress Device

SL 5 - Scene Leader, in this case for Repair 5

SOPV - Solenoid Operated Pilot Valve

UEL - Upper Explosive Limit

WIFCOM - Wire Free Radio Communication

APPENDIX B.

GLOSSARY

Active Desmoking
Active desmoking is removing smoke and heat from the smoke control zone between the inner smoke boundary and outer smoke boundary prior to extinguishing the fire, to aid firefighting efforts and reduce smoke spread in the ship. Active desmoking is applied only for fires that involve primarily class A and class C materials. See paragraph 555-7.7.

Affected Space
The space that is burning.

Attack Team One or two fully manned hoses, in accordance with NWP 62-1.

Backdraft An explosion that results from combining fresh air with hot flammable fire gases that have reached their autoignition temperatures. Large volumes of carbon monoxide and other fire gases can be generated by incomplete combustion in closed spaces.

Breathing Apparatus
″Breathing apparatus″ and ″Self-Contained breathing devices″ refer to oxygen breathing apparatus (OBAs) and SCBAs.

Buffer Zone The area between the inner and outer smoke boundaries established for a class B fire in a machinery space. See paragraph 555-10.3.7.2.

Chemical, Biological and Radiological (CBR) Boundary
A physical barrier that isolates an area not protected against CBR contamination from an area that is protected against CBR contamination. See paragraph 555-7.13.1.

Collective Protection System (CPS)
Protects areas of a ship designated as ″zones″ from Chemical, Biological and Radiological (CBR) contamination. See paragraph 555-7.13.

Direct Fire Attack
A method of attacking a fire in which firefighters advance into the immediate fire area and apply the extinguishing agent directly onto the seat of the fire to extinguish the fire or spray a water fog (fog attack) into the hot gas layer over the seat of the fire to gain control. See paragraph 555-7.5.

Fire Contained
When one or more hose teams are making progress advancing on a fire and the fire is contained in a single area within a compartment. This term means the same as ″Fire Under Control″ and is used when reporting from the scene to avoid confusion with the term ″Fire Out of Control.″

Fire Hose Station
Location where fire plug and associated equipment are stored; commonly referred to as either a fire station or a fireplug.

Fire Plug The valve at the fire hose station.

Fire Out All visible flames have been extinguished. Smoldering fires may still be present.

Fire Under Control
When one or more hose teams are making progress advancing on a fire and the fire is contained in a single area within a compartment.

Flashover The transition from a growing fire to a fully developed fire in which all combustible items in the compartment are involved in fire.

Heat Strain The body's reaction to heat stress. The reaction may be local, such as a burn, or generalized, such as an increase in core (inner) body temperature.

Heat Stress Subjecting the body to higher than normal temperatures. Heat stress may be caused by a high temperature environment or by wearing clothing, such as a firefighter's ensemble, that impedes the body's normal cooling.

Hot Surface For fire hazard precautions for piping systems containing flammable liquids, NSTM Chapter 505 defines a hot surface as 650°F (343°C) for lubricating oil and hydraulic oil systems and 400°F (205°C) for all other flammable liquids.

Indirect Fire Attack
A method of attacking a fire in which firefighters outside the fire area discharge water fog into the fire area through a cracked open door or a bulkhead or overhead penetration. See paragraph 555-7.6.

Limited Protection Zone
A CPS zone that provides protection only from liquid or solid CBR contamination; the zone may be contaminated with vapor CBR agents. See paragraph 555-7.13.

Machinery Space
Main and auxiliary machinery spaces which contain any of the following: installed firefighting systems, oil fired boilers, internal combustion engines, gas turbines or steam turbines.

Manned Hose A single fire hose manned with a nozzleman and hosemen (as required).

Mission Oriented Protective Posture (MOPP)
The level of CBR protection directed by a ship's commanding officer. Levels of protection range from 1 to 4, with 4 being fully protected. See NSTM Chapter 470 and NWP 62-1.

Out-of-Control Fire
A fire that creates untenable conditions due to heat and smoke forcing personnel to abandon the space.

Overhaul An examination and cleanup operation. It includes finding and extinguishing hidden fire and hot embers and determining whether the fire has extended to other parts of the ship.

Pressure Zone A zone within a CPS.

Protective Mask (MCU-2/P)
Designed to protect the face, eyes, and respiratory tract of the user from tactical concentrations of chemical and biological agents, toxins, and radioactive fallout particles.

Rollover Sudden spread of flame through the unburnt gases and vapors in the upper layer across the overhead of a space.

Shall When application of a procedure is mandatory.

Should When application of procedure is recommended.

Smoke Control Zone
The area between the inner and outer smoke boundaries established for fires that involve primarily class A or class C materials. See paragraph 555-7.7.1.

Surfactant A large group of surface acting compounds that include detergents, wetting agents and liquid soaps.

Total Protection Zone
A CPS zone that provides protection from all CBR contamination. See paragraph 555-7.13.

Unaffected Space
Any space other than the burning space.

Vapor Secure **Establishing a film or foam blanket over flammable liquid to prevent vaporization. When vapors cannot reach the flames, flame production ceases and the surface is vapor secured.**

APPENDIX C.

SUMMARY OF CHANGES AND CROSS-REFERENCE

Rev 6 Paragraph	Change
SECTION 2. FIRE EXTINGUISHING AND RELATED SYSTEMS DESCRIPTION AND OPERATION	
555-2.8.2.1.b and c	Guidance on carbon dioxide health and safety hazards clarified slightly to more accurately reflect documented technical sources.
555-2.10.5.1	Removed references to Heat Actuated Devices (HADs) and Fixed Temperature Units (FTUs), obsolete magazine sprinkler system components which have been replaced with the Heat Sensing Device (HSD).
SECTION 3. FIRE EXTINGUISHING SYSTEM COMPONENT	
555-3.4.7	Removed references to Heat Actuated Devices (HADs) and Fixed Temperature Units (FTUs), obsolete magazine sprinkler system components which have been replaced with the Heat Sensing Device (HSD).
555-3.5.3.2	Information on APC link respose time provided.
SECTION 5. FIREFIGHTING ORGANIZATION	
Section 5	Numerous changes made throughout Section 5 to implement decisions made at the Fleet Review Conference for NWP 3-20.31 ″Surface Ship Survivability″ in May 1999. The primary direction was to move detailed descriptions of fire party personnel duties from Section 9.2 of NWP 3-20.31 Rev -, dated November 1996 into NSTM 555, Volume 1, Section 5.
SECTION 6. FIRE PARTY EQUIPMENT	
555-6.1.3	Description of firefighter's ensemble change to incorporate replacement of the anti-flash hood for fire party members with the firefighter's hood per COMNAVSEASYSCOM 020319Z MAR 99.
555-6.2.1	Provide the manufacturer of the NFTI.
SECTION 7. FIREFIGHTING TACTICS	
555-7.5.4.b and 555-7.5.6	Guidance clarified that fog attack may delay or prevent flashover.
SECTION 8. SPECIAL FIRE SCENARIOS	
555-8.4.3	Information on APC link respose time provided.
SECTION 10. MACHINERY SPACE FIREFIGHTING DOCTRINE FOR CLASS B FIRES IN SURFACE SHIPS	
555-10.3.9.2	Information, related to who should wear FFE, was relocated to NSTM Chapter 074, Volume 1.

APPENDIX D.

INDEX

Subject	Paragraph Number	Page Number*
	A	
Accumulator Tank, Magazine Sprinkler System	555-3.4.6.4, 555-3.4.6.5	3-25, 3-25
Acetylene	555-1.11.2.2	1-21
Affected Space	555-10.3.5.5	10-5
AFFF	See Aqueous Film Forming Foam	
All-Purpose Nozzle	See Nozzles, NAP	
Ansul	555-3.3.2.7	3-20
Anti-Ship Weapons	See Weapons	
APC	See Aqueous Potassium Carbonate	
Application of Firefighting Agents	555-1.12	1-22
Applicators, Nozzle	See Nozzles, Applicators	
Aqueous Film Forming Foam (AFFF)	555-1.12.5	1-23
Environmental Restrictions	555-1.12.5.5	1-23
Extinguishing Fire with	555-1.11.3.2	1-21
Firefighting Advantages	555-1.12.5.2	1-23
Properties	555-1.12.5.1, 555-2.4	1-23, 2-16
Purpose	555-2.4.1	2-16
Single Speed Pump	555-2.4.2.d	2-17
Supply Method	555-2.4.2	2-16
Two Speed Pump	555-2.4.2.b	2-16
Aqueous Film Forming Foam (AFFF) Extinguishers	555-4.3	4-6
Use on Deep Fat Fryer Fires	555-8.4.4	8-2
Aqueous Film Forming Foam (AFFF) Systems		
Actuation Controls	555-2.7	2-22
Balanced Pressure Proportioner	See Proportioners, AFFF Balanced Pressure	
Bilge Sprinkling	555-2.9.1.7, 555-3.1.10.1, 555-10.3.2.5	2-33, 3-11, 10-3
Conflagration Station	555-2.7.4	2-23
Control Valves	555-3.1.9	3-5
Deck Edge Sprinklers	555-3.1.10.3	3-11
Electrical Actuation	555-2.4.3.1	2-17
Electrical Hazard	555-1.12.5.4, 555-8.2	1-23, 8-1
Equipment	555-3.1	3-1
Flush Deck Sprinklers	555-3.1.10.4	3-11
FP-180 Proportioner	555-3.1.1	3-1
Freezing	555-1.12.5.1	1-23
High Capacity Proportioning System	See Proportioning Systems	
Hose Nozzles	555-3.1.8	3-5
Hose Reels	555-3.1.7	3-3
Hydrogen Sulfide	555-2.7.10	2-23
Injection Pump	See Injection Pump	
Inline Eductor	555-4.3	4-6
Manual Actuation	555-2.7.3	2-22

Subject	Paragraph Number	Page Number*
Overhead Sprinklers	555-3.1.10.2	3-11
Pick-up Tube Extension, Inline Eductor	555-4.3	4-6
Power Distribution System	555-2.7.6	2-23
Proportioners	See Proportioners	
Proportioning Systems	See Proportioning Systems	
Pumps	555-2.4.4.2	2-19
Service Outlets	555-2.5	2-20
Sprinkler Systems	555-2.6, 555-3.1.10	2-21, 3-10
Station Actuation	555-2.4.3	2-17
System Maintenance	555-2.7.9	2-23
Tanks	555-2.4.4.1, 555-3.1.6	2-19, 3-3
Transfer Pumps	See Pumps, AFFF Transfer	
Aqueous Potassium Carbonate (APC)	555-1.12.10	1-26
Aqueous Potassium Carbonate System	555-3.5, 555-8.4	3-27, 8-2
Cable Release	555-3.5.3.3	3-28
Components	555-3.5.2	3-27
Cylinder	555-3.5.2.3	3-27
Cylinder Assembly	555-3.5.2.2	3-27
Cylinder Valve	555-3.5.2.4	3-27
Description	555-2.11.2	2-38
Detector Assembly	555-3.5.3.2	3-28
Discharge	555-3.5.3	3-28
Lever Control Head	555-3.5.2.5	3-27
Nozzles	555-3.5.3.1	3-2 8
Operation	555-2.11.3	2-40
Pressure Release Control Box	555-3.5.3.4	3-28
Pressure Switch	555-3.5.2.6	3-27
Remote Manual Control Box	555-3.5.3.5	3-28
Type (A, AA, B, modified B, BB)	555-3.5.2.1	3-27
At-Sea Fire Party	555-5.5.1	5-4
Atmosphere Testing	555-7.10.3, 555-10.3.11.2	7-42, 10-13
Attack, Fire	555-7.2, 555-7.2.4	7-1, 7-2
Direct	555-7.2.4.1.a, 555-7.5	7-2, 7-11
Indirect	555-7.6	7-19
Space Above	555-7.8	7-40
Vertical	555-7.8	7-40
Attack Team	555-5.4.5	5-3
B		
Backdraft	555-1.9.3	1-18
Balanced Pressure Proportioner, AFFF	See Proportioners, AFFF Balanced Pressure	
Bilge Sprinklers, AFFF	See AFFF, Bilge Sprinklers	
Boundaries		
Fire	555-7.2.7.1, 555-10.3.8.3	7-4, 10-10
Fire Zone	555-2.1.2	2-1
Smoke	555-7.2.7.2	7-4
Watertight Zone	555-2.1	2-1
Breaking Combustion Chain Reaction	555-1.11.5	1-21
Breathing Apparatus	555-6.1, 555-6.1.7, 555-10.3.5.5, 555-10.3.9.1	6-1, 6-3, 10-5, 10-10
Burning Characteristics		

Subject	Paragraph Number	Page Number*
Explosives	555-1.7	1-14
Gaseous Fuels	555-1.4.3.3.1	1-9
Liquid Fuels	555-1.4.3.2.3	1-9
Propellants	555-1.7	1-14
Burning Rate, Solid Fuels	555-1.4.3.1.2	1-9
Bursting Disk, on CO_2 Cylinders	555-3.2.3	3-17
C		
Cable Release System, APC System	555-3.5.3.3	3-28
Cable Operated Control Head, CO_2 System	555-3.2.1.3	3-13
Cables, Electrical	See Electrical Cableways	
Cableways, Electrical	See Electrical Cableways	
Capabilities, Firefighting Systems	555-10.3.2	10-3
Carbon Monoxide	555-1.5.4, 555-1.5.4.1	1-12, 1-12
Carbon Dioxide (CO_2)	555-1.5.4, 555-1.5.4.2, 555-10.3.2.2	1-12, 1-13, 10-3
Actuation System for Halon 130	555-3.3.2.1, 555-3.3.2.2	3-18, 3-19
Cartridge (for PKP extinguisher)	555-4.1.6	4-2
Electrical Hazard	555-1.12.6.1	1-23
Extinguishing Fire with	555-1.11.3.1, 555-1.11.3.3	1-21, 1-21
Personnel Hazards	555-1.12.6.4	1-24
Properties	555-1.12.6	1-23
Time Delay (Halon 1301 Actuation System)	555-3.3.2.7	3-20
Vent (Halon 1301 Actuation System)	555-3.3.2.8	3-21
Carbon Dioxide (CO_2) Extinguishers		
15-Pound Portable Extinguishers	555-4.2, 555-4.2.6	4-2, 4-4
Recharging Cylinders	555-4.2.6, 555-4.2.6.4	4-4, 4-4
Transfer	555-4.2.6.3, 555-4.2.6.4	4-4, 4-4
Static Electricity Hazard	555-4.2.5	4-3
Submarine Battery Well Extinguishers	555-4.2.5.1	4-4
Carbon Dioxide (CO_2) Systems, Installed		
Cable Operated Control Head	555-3.2.1.3	3-13
Control Mechanism	555-3.2.2.5	3-17
Description	555-2.8	2-24
Discharge Time Delay	555-2.8.3.3	2-31
Equipment	555-3.2	3-11
Fixed Pipe System	See Total Flooding System	
Fixed System Components	See Total Flooding System	
Hose Reel System	555-2.8.4	2-31
Operation	555-2.8.1	2-24
Pressure Operated Switch	555-2.8.3.2	2-31
Remote Release	555-2.8.3.1	2-30
Safety	555-2.8.2	2-25
Time Delay, Discharge	555-2.8.3.3	2-31
Total Flooding System	555-2.8.3, 555-3.2.1	2-30, 3-11
Carleton Time Delay	555-3.3.2.7	3-20
Chain Reaction	555-1.4.2	1-7
Breaking the	555-1.11.5	1-21
Check Valves	555-2.3.8.3, 555-3.2.1.11	2-10, 3-15
1/4 Inch, Halon 1301 System	555-3.3.2.4	3-19
1-1/2 Inch, Halon 1301 System	555-3.3.2.9	3-22

Subject	Paragraph Number	Page Number*
Hydraulically Operated, Sprinkler System	555-3.4.5.4	3-24
Power Operated, Sprinkler System	555-3.4.5.5	3-24
Spring Loaded Lift, Sprinkler System	555-3.4.5.3	3-24
Vented, Sprinkler System	555-3.4.7.6	3-27
Chemetron	555-3.3.2.1.1, 555-3.3.2.7	3-18, 3-20
Chemical, Biological, and Radiological (CBR) Boundary	555-7.13.2	7-46
Chemical Lights, Portable	555-7.5.12, 555-9.3.1.	7-19, 9-2
Chemistry of Fire	555-1.3	1-5
Class A Fires	555-1.6.2, 555-4.1.5	1-13, 4-2
555-7.2.5, 555-10.3.2.1	7-2, 10-3	
Class B Fires	555-1.6.3, 555-1.12.3.3, 555-1.12.5.3 555-8.4, 555-8.5, 555-10.1.1 555-10.3.2.2, 555-10.3.2.3, 555-10.3.5, 555-10.3.6	1-13, 1-22, 1-23, 8-2, 8-4, 10-1, 10-3, 10-3, 10-5, 10-7
Class C Fires	555-1.6.4, 555-7.2.5 555-10.3.2.2	1-13, 7-2 10-3
Class D Fires	555-1.6.5	1-13
Classification of Fires	See Fire Classifications	
Clogging, Hoses	555-4.7.1	4-16
Clothing	555-6.1, 555-10.3.9.2	6-1, 10-11
CO_2	See Carbon Dioxide	
Cold Weather, Additional Considerations	555-7.12	7-45
Collective Protection System (CPS)	555-7.13	7-45
Combustion	555-1.3.3	1-5
Chain Reaction	555-1.4.2, 555-1.11.5	1-7, 1-21
Gases	555-1.5.4	1-12
Products of	555-1.5	1-12
Requirements	555-1.4.1	1-7
Sustained	555-1.4.5.2	1-11
Communication	555-7.14.5	7-48
Compartment Fire		
Backdraft	555-1.9.3	1-18
Decay Stage	555-1.9.1.4	1-17
Dynamics	555-1.9	1-15
Exposure Thresholds	555-1.9.2	1-17
Fire Spread by Conduction	555-1.10.2	1-18
Flashover Stage	555-1.9.1.2	1-16
Fully Developed Stage	555-1.9.1.3	1-17
Growth	555-1.9.1	1-15
Growth Stage	555-1.9.1.1	1-16
Use of Water Fog	555-1.12.4.2	1-23
Composite System	555-2.3.3.d	2-2
Condition I	555-5.2	5-1
Condition V	555-5.3	5-1
Conduction	555-1.8.2, 555-7.2.6	1-15, 7-3
Conduction, Spreading Fire Between Compartments	555-1.10.2	1-18
CONFLAG	See Conflagration Station	

Subject	Paragraph Number	Page Number*
Conflagration Station	555-2.7.4, 555-2.7.8.1	2-23, 2-23
Connection, International Shore	See International Shore Connection	
Control		
Head, Cable Operated CO_2 Total Flooding System	555-3.2.1.3	3-13
Mechanism, CO_2 Hose Reel System	555-3.2.2.5	3-17
Valves, AFFF	555-3.1.9	3-5
Controls		
Firemain System	555-2.3.9	2-10
FP-180 Proportioner	See FP-180 Proportioner, Controls	
Sprinkler System	See Sprinkler Systems, Controls	
Convection	555-1.8.4	1-15
Corner Pulleys, CO_2 System	555-3.2.1.8	3-15
Cotton Jacket Hose	555-4.5.7	4-11
Countermeasure Washdown	555-2.6.6	2-22
Couplings, Hose	555-4.6	4-12
Critique	555-9.6	9-5
Cutout Valves, Firemain	555-2.3.8.1	2-10
Cylinder		
CO_2 System	555-3.2.1.1, 555-3.2.2.1	3-11, 3-16
CO_2 System, Pressure in	555-3.2.3	3-17
CO_2 System, Bursting Disk	555-3.2.3	3-17
Handling, Halon 1301 System	555-2.9.3.1	2-37
Halon System	555-3.3.2.8	3-21
Hydrostatic Testing, Halon System	555-4.2.6.2	4-4
Manual/Solenoid Actuation, Halon System	555-3.3.2.2	3-19
Manual Actuation, Halon 1301 System	555-3.3.2.1	3-18
Recharging	See Recharging Cylinders	
Valve, Halon 1301 System	555-3.3.2.8	3-21
Weighing, CO_2	555-4.2.6.1	4-4
	D	
Damage Control Assistant	555-5.1.1.2	5-1
Damage Control Lockers, MSC	555-2.12.5	2-41
Damage Control Repair Station	555-5.4	5-2
Damaged Fire Pump Motor Controllers	555-7.14.1	7-47
Decay Stage, Fire in Compartment	555-1.9.1.4	1-17
Deck Edge Nozzles, AFFF	555-2.6.3	2-21
Deck Edge Sprinklers, AFFF	See AFFF, Deck Edge Sprinklers	
Decomposition, Halon	555-1.12.7.5	1-24
Deep Fat Fryer Fire	555-8.4	8-2
Delay, Discharge (Time)	See Time Delay	
Desmoking	555-7.10.2, 555-10.3.11	7-41, 10-12
Active	555-7.2.4.1.c, 555-7.7	7-2, 7-23
Equipment, Portable	555-7.7.5	7-39
Flow Path	555-7.7.4	7-38
Detector Assembly, APC System	555-3.5.3.2	3-28
Dewatering	555-7.10.4, 555-10.3.11.3	7-43, 10-13
Diesel Engine Enclosure Fire	555-8.5	8-4
Difficulties in Firefighting	555-7.14	7-47

Subject	Paragraph Number	Page Number*
Direct Fire Attack	555-7.2.4.1.a, 555-7.5	7-2, 7-11
Discharge		
Delay	See Time Delay	
Flow Rates, Nozzles	See Nozzles, Discharge Flow Rates	
Head, CO_2 Total Flooding System	555-3.2.1.2, 555-3.2.1.3, 555-3.2.1.4	3-12, 3-13, 3-14
Horn, CO_2 Hose Reel	555-3.2.2.3	3-16
Distribution System, Power	See Power Distribution System	
Doctrine		
Machinery Space Firefighting	Section 10	10-1
Minesweeper Machinery Space Firefighting	555-8.6	8-5
Vital Electronics Space Firefighting	555-8.7	8-8
Double Female Hose Fitting	555-4.6.2	4-12
Double Male Hose Fitting	555-4.6.3	4-12
Drills	555-9.1	9-1
Dry Type Sprinkler Systems	555-2.10.3, 555-2.10.6.1	2-37, 2-38
Dry Chemical Extinguishing Agent	See Potassium Bicarbonate	
Dynamics, Compartment Fire	See Compartment Fire Dynamics	
	E	
ECC (Electronics Casualty Control)	555-8.8.2	8-9
Eductor, AFFF Inline	555-4.10	4-22
EEBD (Emergency Escape Breathing Device)	555-10.3.5.1, 555-10.3.6.2	10-5, 10-7
Electrical		
Actuation of AFFF Station	555-2.4.3.1	2-17
Cableways, Fire in	555-1.10.3, 555-1.10.4, 555-1.10.5	1-18, 1-18, 1-18
Fire	See Class C Fire	
Hazard	555-1.12.3.2, 555-1.12.4.1, 555-1.12.5.4	1-22, 1-23, 1-23,
555-1.12.6.1, 555-7.5.2	1-23 7-11	
Electrically Operated Valves	555-3.4.4.5	3-23
Electricity, Static	See Static Electricity	
Electronics Casualty Control (ECC)	555-8.8.2	8-9
Electronics Space Firefighting Doctrine	555-8.8	8-9
Emergency Escape Breathing Device (EEBD)	555-10.3.5.1, 555-10.3.6.2	10-5, 10-7
Engine Enclosure Fire	555-8.5	8-4
Engineer Officer	555-5.1.1.1	5-1
Equipment, New	555-1.1.7	1-1
Equipment Choosing Correct	555-10.3.3	10-3
Evacuation	555-10.3.6.2	10-7
Explosive Limit	555-1.4.3.4.1	1-9
Explosive Range	555-1.4.3.4	1-9
Explosives, Burning Characteristics	555-1.7	1-14
Explosives, Composition of	555-1.7.1	1-14
Exposure Thresholds	555-1.9.2	1-17
Extinguisher, fire		
AFFF Portable	555-4.3	4-6
CO_2 Portable	555-4.2, 555-4.2.6, 555-8.1	4-2, 4-4, 8-1
Halon 1211 Portable	555-1.12.7.1	1-24
PKP Portable	555-4.1	4-1
Extinguishing		
Breaking Combustion Chain Reaction	555-1.11.5	1-21

Subject	Paragraph Number	Page Number*
Fuel Removal	555-1.11.2	1-21
Heat Removal	555-1.11.4.1	1-21
Methods	555-1.11.1	1-21
Oxygen Removal	555-1.11.3	1-21
Theory of	555-1.11	1-21
Extinguishment Method		
CO_2	555-1.12.6.2	1-24
PKP	555-1.12.9.2	1-26
Halon	555-1.12.7.2	1-24
Water	555-1.12.2	1-22
APC	555-1.12.10	1-26
F		
Faking Firehose	555-4.5.6	4-11
Fantail Sprinkler System	555-2.6.7	2-22
Fatigue	555-7.14.2	7-47
Feedback, Radiation	555-1.3.3.2	1-5
Filter, Halon Actuation Line	555-3.3.2.11	3-22
Fire		
Attack	See Attack	
Boundaries	See Boundaries, Fire	
Chemistry	See Chemistry of Fire	
Classifications	555-1.6, 555-1.6.1	1-13, 1-13
Classifications, Class A Fires	555-1.6.2	1-13
Classifications, Class B Fires	555-1.6.3	1-13
Classifications, Class C Fires	555-1.6.4	1-13
Classifications, Class D Fires	555-1.6.5	1-13
Growth, in Compartments	555-1.9.1	1-15
Hose Station	555-4.4	4-7
Insulation	555-2.1.2.1	2-1
Party	555-5.4.4, 555-5.5.1	5-3, 5-4
Prevention	See Prevention	
Pumps	See Pumps	
Spread	555-1.10	1-18
Spread, by Conduction Between Compartments	555-1.10.4	1-18
Tetrahedron	555-1.4.2	1-7
Triangle	555-1.4.1	1-7
Zone Boundaries	See Boundaries, Fire Zone	
Firefighter's Ensemble	555-6.1.3	6-1
Firefighting		
Agents	See Agents	
Tactics	See Tactics	
Organization	See Organization	
Fire Hose Station	555-4.4	4-7
Typical Equipment For	555-4.4.1	4-7
Firehose	See Hose	
Firemain Systems	555-2.3	2-2
Composite Systems	555-2.3.3.d	2-6
Controls	555-2.3.9	2-10

Subject	Paragraph Number	Page Number*
Design	555-2.3.5	2-9
Description	555-2.3.4	2-6
Fouling	555-2.3.10	2-11
Function of	555-2.3.2	2-2
Horizontal Loop	555-2.3.3.b.	2-2
Instruments	555-2.3.9	2-10
Monitoring Equipment	555-2.3.9.1	2-11
Single Main	555-2.3.3.a	2-2
Strainers	555-2.3.7	2-10
Types of	555-2.3.3	2-2
Valves	555-2.3.8	2-10
Vertical Offset Loop	555-2.3.3.c	2-3
Fire Marshall	555-5.1.1.4	5-1
Fireplugs		
1-1/2 Inch	555-4.4.3	4-8
2-1/2 Inch	555-4.4.2	4-8
Identification	555-4.4.5	4-9
Sizes	555-4.4.1	4-7
Typical Equipment for	555-4.4.1	4-7
Fixed Temperature Unit (FTU)	555-3.4.7.3	3-26
Flames	555-1.5.2	1-12
Flammable		
Gas Fire	555-8.6	8-5
Gases	555-1.6.3	1-13
Liquids	555-1.6.3	1-13
Liquids and Weapons, Fighting Fires of	555-1.7.2	1-14
Range	See Explosive Range	
Flashover	555-1.9.1.2, 555-9.4	1-16, 9-3
Flashpoint	555-1.4.3.2.2	1-9
Flight Deck		
Fire	555-8.3	8-2
Nozzles	See Nozzles, Flight Deck	
Sprinkling	See Sprinkler Systems, Flight Deck	
Flood Valve, CO_2 System	555-3.2.1.1, 555-3.2.2.1	3-11, 3-16
Flush Deck Nozzles, AFFF	555-2.6.3	2-21
Flush Deck Sprinklers, AFFF	See AFFF, Flush Deck Sprinklers	
Foam Systems	See Aqueous Film Forming Foam Systems	
Fog Attack	555-7.5.6	7-13
Fouling of Firemain System by Marine Growth	555-2.3.10	2-11
FP-180 Proportioner	See Proportioners	
AFFF	555-3.1.1	3-1
Controls	555-2.7.5	2-23
Friction, Pressure Loss in Hose	555-4.7.2	4-16
FTU (Fixed Temperature Unit)	555-3.4.7.3	3-26
Fuel		
Gaseous	See Gaseous Fuels	
Liquid	See Liquid Fuels	
Liquid Fuel Fire	555-10.3.4	10-4

Subject	Paragraph Number	Page Number*
Major Spill	555-10.3.5	10-5
Removal of	555-1.11.2	1-21
Solid	See Solid Fuels	
Fully Developed Stage, Fire in Compartment	555-1.9.1.3	1-17
G		
Galley Fire Protection System	See Aqueous Potassium Carbonate System	
Gas Free Engineer	555-5.1.1.3	5-1
Gas, Toxic, on Submarines	555-7.10.3.a	7-42
Gas-Turbine Engine Enclosure Fire	555-8.5	8-4
Gaseous Fuels	555-1.4.3.3	1-11
Gases, Combustion Products	555-1.5.4	1-12
Gases, Flammable	See Flammable Gases	
Growth Stage, Fire in Compartment	555-1.9.1.1	1-16
H		
HAD	555-3.4.7.2	3-26
Halon	555-1.12.7	1-24
Cylinder	See Cylinder	
Decomposition	555-1.12.7.5	1-24
Ozone Depletion	555-1.12.7.7	1-25
Personnel Hazards	555-1.12.7.6	1-25
Halon System		
Actuation	555-2.9.1.5, 555-3.3.2	2-33, 3-18
Actuation Line Filter	555-3.3.2.11	3-22
CO_2 Actuation	555-3.3.2	3-18
Components	555-2.9.1.1	2-32
Cylinder	555-3.3.2.8	3-21
Cylinder Handling	555-2.9.3.1	2-37
Cylinder Recharging	555-2.9.3.2	2-37
Description	555-2.9	2-32
Equipment	555-3.3	3-18
Halon 1301 System	555-2.9.1	2-32
Inadvertent Operation	555-2.9.1.8	2-33
Installation Requirements	555-2.9.1.3	2-33
Location	555-2.9.1.2	2-32
Metallic Hose	555-3.3.2.3	3-19
Nozzles	555-3.3.2.10	3-22
Operation	555-2.9.2	2-33
Pressure Switch	555-2.9.2, 555-3.3.2.5	2-33, 3-19
Supplemental Systems	555-2.9.1.7	2-33
Time Delay	555-2.9.1.4.1, 555-2.9.2, 555-3.3.2.7	2-33, 2-33, 3-20
Time Delay Bypass Valve	555-2.9.2, 555-3.3.2.7.1	2-33, 3-21
Types	555-2.9.1.4	2-33
Valve	555-3.3.2.8	3-21
Hazardous Products of Combustion	555-1.5	1-12
Heat	555-1.4.5, 555-1.5.3	1-11, 1-12
Actuated Device (HAD)	555-3.4.7.2	3-26
Extreme	555-7.14.4	7-48
Radiant	555-1.3.3.1	1-5
Removal of	555-1.11.4	1-21

Subject	Paragraph Number	Page Number*
Sensing Device (HSD)	555-2.10.5.1, 555-3.4.7.4	2-38, 3-26
Transfer	555-1.8, 555-1.12.3.4	1-15, 1-22
High Velocity Water Fog	See Water Fog	
Horizontal Loop System	555-2.3.3.b	2-2
Hosereel System, CO_2	555-2.8.4, 555-3.2.2	2-31, 3-16
Hose	555-10.3.9.3	10-11
Backup	555-7.5.8	7-16
Clogging	555-4.7.1	4-16
CO_2	555-3.2.2	3-16
Coordination	555-7.5.9	7-16
Cotton Jacket	555-4.5.7	4-11
Couplings	555-3.5	3-27
Dimensions	555-4.5.1	4-9
Double Female Coupling	555-4.6.2	4-12
Double Male Coupling	555-4.6.3	4-12
Faking	555-4.5.6	4-11
Fire Hose Station	555-4.5.6.1	4-11
Fireplugs	See Fireplugs	
Fittings	555-4.6	4-12
Fittings, Threads	555-4.5.3	4-10
Friction Loss	555-4.7.2	4-16
Handling	555-7.3	7-5
Increaser Coupling	555-4.6.5	4-12
Maintenance	555-4.5.7	4-11
Material	555-4.5.1	4-9
Multiple Hose Coordination	555-7.5.9	7-16
Noncollapsible	555-4.5.2, 555-4.5.4.b, 555-4.5.7	4-10, 4-11, 4-11
Nozzles	See Nozzles	
Pressure, Checking	555-4.7.1	4-16
Pressure, Loss	555-4.7	4-16
Reducer Coupling	555-4.6.4	4-12
Reel, AFFF	555-4.5.2, 555-3.1.7	4-10, 3-3
555-10.3.5.3, 555-10.3.9.3	10-5, 10-11	
Reel, Freshwater	555-4.12	4-32
Spanner Wrenches	See Spanner Wrenches	
Stock Numbers	555-4.5.4	4-11
Stowing	555-4.5.6.2	4-11
Suction	555-4.5.5	4-11
Synthetic Jacket	555-4.5.4.a, 555-4.5.7	4-11, 4-11
Tactics	555-7.2.4.1	7-2
Tri-Gate	555-4.11.2.9	4-27
Wye-Gate	555-4.6.6	4-13
Hot Surface	555-1.4.5	1-11
HSD	See Heat Sensing Device	
Hycheck Valves	555-2.4.3.1.c, 555-3.1.9.4	2-18, 3-8
Hydrostatic Testing	555-3.2.3, 555-4.2.6.2	3-17, 4-4
Hypergolic Mixtures	555-1.7.3	1-14
Hytrol Valves	555-3.1.9.3	3-8

I

Subject	Paragraph Number	Page Number*
Ignition Temperature, Solid Fuels	555-1.4.5.2	1-9
Increaser Coupling, Hose	555-4.6.5	4-12
Indirect Fire Attack	555-7.2.4.1.b, 555-7.6	7-2, 7-19
Indirect Firefighting	See Indirect Fire Attack	
Initial Action	555-7.1	7-1
Instruments, Firemain System	555-2.3.9	2-10
International Shore Connection	555-4.6.7	4-13
Investigation, Post-Fire	555-7.10.5	7-44
Isolation	555-7.2.5, 555-10.3.8	7-2, 10-9
K		
Kidde, Walter	See Walter Kidde	
L		
Large Fires, Additional Considerations	555-7.11	7-44
LEL (Lower Explosive Limit)	See Lower Explosive Limit	
Library, Reference	555-1.1.3	1-1
Limitations, Firefighting Systems	555-10.3.2	10-3
Limited Protection Zone	555-7.13	7-45
Limits, Explosive	See Explosive Limits	
Liquid Fuels	555-1.4.3.2	1-9
Burning Characteristics	555-1.4.3.2.2	1-9
Flashpoint	555-1.4.3.2.2	1-9
Sustained Combustion	555-1.4.3.2.2	1-9
Vaporization	555-1.4.3.2.1	1-9
Liquids, Flammable	See Flammable Liquids	
Lockers		
Damage Control	See Damage Control Repair Station	
Repair	See Damage Control Repair Station	
Locking Devices	See Protective Devices	
Loop System	See Firemain Systems	
Low Velocity Water Fog	See Water Fog	
Lower Explosive Limit (LEL)	555-1.4.3.4, 555-1.4.3.4.1	1-9, 1-9
M		
Magazine Sprinkling	555-2.10.1	2-37
Automatic Control	555-2.10.5, 555-2.10.6.2	2-38, 2-38
Controls	555-3.4.7	3-25
Dry Type	555-2.10.3	2-37
FTU	555-3.4.7.3	3-26
HAD	555-3.4.7.2	3-26
HSD	555-3.4.7.4	3-26
PRP Valve	555-3.4.7.7	3-27
Thermopneumatic Elements	555-3.4.7.1	3-25
Transmission Lines	555-3.4.7.5	3-26
Vented Check Valve	555-3.4.7.6	3-27
Wet Type	555-2.10.4	2-38
Maintenance		
AFFF System	555-2.7.9	2-23
Hose	555-4.5.7	4-11
Manual Actuation, AFFF System	555-2.7.3	2-22
Manual Actuation Cylinder, Halon	555-3.3.2.1	3-18

Subject	Paragraph Number	Page Number*
Manual/Solenoid Actuation Cylinder, Halon	555-3.3.2.2	3-19
Mass Conflagration Training	555-9.3	9-1
Material Condition ZEBRA	555-2.2.3, 555-10.3.5.5, 555-10.3.8.3	2-1, 10-5, 10-10
Material Condition WILLIAM	555-2.3.8.1	2-10
MCM Machinery Space Firefighting	555-8.6.3	8-7
Metal Fire	See Class D Fire	
Metallic Hose in Halon System	555-3.3.2.3	3-19
MHC Machinery Space Firefighting	555-8.6.3	8-7
Military Sealift Command (MSC) Systems	555-2.12	2-40
Damage Control Lockers	555-2.12.5	2-41
Fittings	555-2.12.3	2-40
Foam	555-2.12.2	2-40
Personnel and Procedures	555-2.12.6	2-41
Portable Equipment	555-2.12.4	2-40
Minesweeper Machinery Space Firefighting	555-8.6	8-5
Mission Oriented Protective Posture (MOPP)	555-7.13.2.1, 555-10.3.5.5	7-46, 10-5
MK-50 Torpedo	555-8.9	8-13
MOGAS Fire Procedure	555-8.10	8-15
Monitoring Equipment	555-2.3.9.1	2-11
MSC	See Military Sealift Command	
MSO Machinery Space Firefighting	555-8.6.1	8-5
Multi-jet Nozzles, CO_2	555-3.2.1.9	3-15
Multiple Pull Mechanism, CO_2	555-3.2.1.6	3-14
N		
Naval Firefighter's Thermal Imager (NFTI)	555-6.2, 555-7.9	6-4, 7-41
Navy All Purpose (NAP) Nozzle	555-1.12.3.1, 555-4.9	1-22, 4-19
NFTI	See Naval Firefighter's Thermal Imager	
Noncollapsible Hose	555-4.6.2, 555-4.6.4.b, 555-4.6.7	4-12, 4-12, 4-13
Nozzles		
AFFF	555-3.1.8	3-5
APC System	555-3.5.3.1	3-28
Applicators	555-4.9.1.2	4-20
Deck Edge	555-2.6.3	2-2 1
Discharge Flow Rates	555-4.9.1.3	4-20
Flight Deck	555-2.6.3	2-21
Halon	555-3.3.2.10	3-22
Handling	555-7.4	7-7
Multi-jet	555-3.2.1.9	3-15
Navy All-Purpose (NAP)	555-4.9	4-19
Operation	555-4.7.3, 555-7.4, 555-7.5.5	4-16, 7-7, 7-12
555-7.5.6, 555-7.5.7	7-13, 7-16	
Vari-Nozzle	555-4.8	4-16
Nuclear Weapons, Firefighting Procedures	555-1.7.1	1-14
O		
OBA	See Breathing Apparatus	
Oil Leak	555-10.3.4	10-4
Oil Spray Fires	555-10.3.3.2	10-4
Operating Station	555-2.10.3.1	2-37
Organization	555-5.1	5-1

Subject	Paragraph Number	Page Number*
Otto Fuel	555-1.7.4	1-14
Outlets, Service	See Service Outlets	
Overhaul	555-7.10	7-41
Overhead Fires	555-7.2.1, 555-7.10, 555-10.3.10.b.4	7-1, 7-41, 10-12
Overhead Sprinklers, AFFF	See AFFF, Overhead Sprinklers	
Overheating, Fire Pumps	555-2.3.4	2-6
Oxidation	555-1.3.1	1-5
Oxidizing Materials	555-1.4.4.1	1-11
Oxygen	555-1.4.4, 555-1.12.6.2, 555-1.12.6.3, 555-1.12.8, 555-2.2.3	1-11, 1-24, 1-24, 1-25, 2-2
Oxygen Breathing Apparatus (OBA)	See Breathing Apparatus	
Oxygen, Removal of	555-1.11.3	1-21
Ozone Depletion, by Halon	555-1.12.7.7	1-25
	P	
P-100 Portable Pump		
Accessories	555-4.11.2.9	4-27
Exhaust Primer	555-4.11.2.5	4-25
Foot Valve	555-4.11.2.9.1	4-27
Fumetight Cover	555-4.11.2.9.4	4-27
High Suction Lift	555-4.11.2.10.3	4-30
Hookup for Dewatering	555-4.11.2.10.4	4-31
Hookup for Firefighting	555-4.11.2.10	4-28
Operation	555-4.11.2.8	4-25
P-100 Pump	555-4.11.2	4-24
Stowage	555-4.11.2.9.3	4-27
Suction Hose	555-4.6.5, 555-4.11.2.9	4-12, 4-27
Party, At-Sea Fire	555-5.5.1	5-4
Personnel Hazards		
CO_2	555-1.12.6.4	1-24
Halon	555-1.12.7.6	1-25
PKP	555-1.12.9.3.2	1-26
Personnel Protection	555-6.1, 555-10.3.9	6-1, 10-10
Piston Operated Valve, Magazine Sprinkler System	555-3.4.4.4	3-23
PKP	See Potassium Bicarbonate	
Pneumatically Released Pilot (PRP) Valve	555-2.10.5.1, 555-3.4.7.7	2-38, 3-27
Pool Fires, Small	555-10.3.3.1	10-4
Potassium Bicarbonate (PKP)	555-10.3.2.3, 555-10.3.5.3	10-3, 10-5
Additives	555-1.12.9.1	1-26
Extinguishment Method	555-1.12.9.2	1-26
Portable Extinguishers	555-4.1	4-1
Properties	555-1.12.9	1-26
Use on Class B Fires	555-10.3.2.3, 555-10.3.3.1, 555-10.3.5.3	10-3, 10-4, 10-5
Use on Class C Fires	555-8.1	8-1
Use on Deep Fat Fryer Fires	555-8.4	8-2
Power Distribution System, AFFF	555-2.7.6	2-23
Powercheck Valve	555-2.4.3.1.c, 555-3.1.9.2	2-17, 3-6
Powertrol Valve	555-2.4.3.1.b, 555-3.1.9.1, 555-3.4.4.3	2-18, 3-5, 3-23
Pressure		

Subject	Paragraph Number	Page Number*
Checking Hose	555-4.7.1	4-16
CO_2 Cylinders	555-3.2.3	3-17
Fire Hose	555-4.6.1	4-12
Loss in Fire Hose	555-4.7	4-16
Operated Switch	555-2.8.3.2, 555-2.9.2, 555-3.2.1.7	2-31, 2-33, 3-14
Reducing Valves, Firemain	555-2.3.8.2	2-10
Release Control Box, APC System	555-3.5.3.4	3-28
Switch, Halon 1310 System	555-3.3.2.5	3-19
Switch, APC System	555-3.3.2.6	3-20
Zone	555-7.13	7-45
Prevention, Fire	555-1.2.3.1, 555-10.3.1	1-3, 10-2
Combat Damage	555-1.2.3.1	1-3
Mission	555-1.2.1	1-1
Program	555-1.2.3	1-3
Unauthorized Materials	555-1.2.2	1-3
Propane	555-1.11.2.2	1-21
Propellant	555-9.4	9-3
Burning Characteristics	555-1.7	1-14
Composition of	555-1.7.1	1-14
Hypergolic Fuels	555-1.7.3	1-14
Torpedo Otto Fuel	555-1.7.4	1-14
Proportioners, AFFF	555-2.4.2.c, 555-2.4.4	2-16, 2-19
Proportioners, AFFF Balanced Pressure	555-2.4.2.a, 555-3.1.5	2-16, 3-3
Proportioning Systems, AFFF	555-2.4.4	2-19
Actuation Controls	555-2.7.1	2-22
Protective Devices	555-2.13	2-41
Protection, Personnel	555-6.1	6-1
Protective Mask (MCU-2/P)	555-6.1.7, 555-7.13	6-3, 7-45
PRP Valve	See Pneumatically Released Pilot Valve	
Pull Box, CO_2 System Watertight Break Glass	555-3.2.1.5	3-14
Pulleys, CO_2 System Corner	555-3.2.1.8	3-15
Pumps	555-2.3.6	2-9
AFFF Transfer	555-3.1.4	3-3
AFFF	555-2.4.4.2	2-19
Damaged Motor Controllers	555-7.14.1	7-47
Fire	555-2.3.6	2-9
Overheating	555-2.3.4	2-6
Portable	See Portable Pumps	
Recirculation Line, Fire Pump	555-2.3.4	2-6
Single Speed, AFFF	555-2.4.2.d	2-17
Two Speed, AFFF	555-2.4.2.b	2-16
Pyrolysis	555-1.4.3.1.1	1-7
	R	
Radiant Heat Flux	555-1.9.1.2	1-16
Radiant Heat	555-1.3.3.1, 555-1.12.9.2.1	1-5, 1-26
Radiation	555-1.8.3	1-15
Radiation Feedback	555-1.3.3.2, 555-1.4.3.3.2	1-5, 1-9
Radio, Wire Free Communication (WIFCOM)	555-7.14.5	7-48
Range, Explosive (Flammable)	See Explosive Range	

Subject	Paragraph Number	Page Number*
Rate, Burning	See Burning Rate	
Reaction, Self Sustaining	555-1.3.4	1-5
Recharging Cartridge for PKP Extinguisher	555-4.1.6	4-2
Recharging Cylinders		
AFFF 2-1/2 Gallon Extinguishers	555-4.3	4-6
CO_2 15 Pound Extinguishers	555-4.2.6	4-4
CO_2 Actuation for Halon	555-2.9.3.3	2-37
Halon 130	555-2.9.3.2	2-37
Reducer Coupling, Hose	555-4.6.4	4-12
Reentry	555-7.5.3, 555-10.3.10	7-12, 10-11
Reflash Watch	555-7.2.1, 555-10.3.10.b.4, 555-10.3.11	7-1, 10-12, 10-12
Relief Valves, Firemain	555-2.3.7.4	2-10
Remanning	555-10.3.11.4	10-13
Remote Manual Control Box, APC System	555-3.5.3.5	3-28
Remote Release, CO_2 System	555-2.8.3.1	2-30
Removing Fuel, Extinguishment Method	555-1.11.2	1-21
Removing Heat, Extinguishment Method	555-1.11.4	1-21
Removing Oxygen, Extinguishment Method	555-1.11.3	1-21
Repair Lockers	See Damage Control Repair Station	
Repair Party Leader	555-5.4.2	5-3
Reports from Fire Scene	555-7.2.1	7-1
Requirements for Combustion	555-1.4	1-7
Rescue	555-7.9	7-41
Rollover	555-1.9.1.1.1	1-16
Root Valves, AFFF	555-2.7.7	2-23
Ruptured Firemain	555-7.14.3	7-47
S		
Scenarios, Fire	555-8.1	8-1
Scene Leader	555-5.4.3	5-3
Search and Rescue	555-7.9	7-41
SEED (Supplementary Emergency Egress Device)	555-10.3.6.2	10-7
Self Sustaining Reaction	555-1.3.4	1-5
Service Outlets, AFFF	555-2.5	2-20
Below Decks	555-2.5.2	2-21
Flight Decks	555-2.5.3	2-21
Operation	555-2.5.4	2-21
Shore Connection, International	See International Shore Connection	
Single Main System	555-2.3.3.a	2-2
Single Speed Pump, AFFF	555-2.4.2.d	2-17
Size Up Fire	555-7.2.3, 555-8.8.4.1, 555-10.3.5.3	7-2, 8-10, 10-5
Smoke	555-1.5.5	1-13
Blanket	555-7.6.2	7-23
Boundaries	555-7.2.7.2, 555-10.3.7.2	7-4, 10-8
Control	555-10.3.7	10-8
Curtain	555-7.6.2, 555-7.7.3, 555-7.7.5	7-23, 7-38, 7-39
Removal	555-7.2.7.2	7-4
Solenoid Operated Pilot Valves (SOPV)	555-2.4.3, 555-3.1.9.1, 555-3.1.9.3, 555-3.1.9.4, 555-3.1.9.5	2-17, 3-5, 3-8 3-8, 3-9

Subject	Paragraph Number	Page Number*
Solenoid Valve, Halon System Actuation	555-3.3.2.2	3-19
Solid Fuels	555-1.4.3.1	1-7
Burning Rate	555-1.4.3.1.2	1-9
Ignition Temperature	555-1.4.5.2	1-11
Pyrolysis	555-1.4.3.1.1	1-7
Solid Stream, Water	555-1.12.3	1-22
SOPV	See Solenoid Operated Pilot Valve	
Soundpowered Telephone	See Telephone, Soundpowered	
Spanner Wrenches	555-4.6.8	4-13
Spontaneous Heating	555-1.4.5.1	1-11
Sprinkler Systems, AFFF	555-2.6, 555-3.1.10	2-21, 3-10
Bilge	555-3.1.10.1	3-11
Controls	555-2.7.2	2-22
Countermeasure Washdown	555-2.6.6	2-22
Deck Edge	555-3.1.10.3	3-11
Design	555-2.6.1	2-21
Fantail	555-2.6.7	2-22
Flight Deck	555-2.6.2, 555-2.6.5	2-21, 2-21
Flight Deck Diagrams	555-2.6.4	2-21
Flight Deck Nozzles	555-2.6.3	2-21
Flush Deck	555-3.1.10.4	3-11
Location	555-2.6.1	2-21
Overhead	555-3.1.10.2	3-11
Supply of	555-2.6.1	2-21
Weapons Staging Area	555-2.6.8	2-22
Sprinkler Systems, Water		
Accumulator Tank	555-3.4.6.4, 555-3.4.6.5	3-25, 3-25
Components	555-3.4.1	3-22
Controls	555-3.4.3	3-23
Dry Type	555-3.4.5	3-23
Equipment	555-3.4	3-22
Magazine	See Magazine Sprinkling	
Miscellaneous	555-2.10.6	2-38
Types	555-3.4.2	3-22
Valves	555-3.4.3, 555-3.4.4	3-23, 3-23
Wet Type	555-3.4.6	3-25
Staging Area	555-7.2.3	7-2
Start of Fire	555-1.3.2	1-5
Static Electricity, Explosive Hazards	555-4.2.5	4-3
Station Actuation, AFFF	555-2.4.3	2-17
Station, Conflagration	See Conflagration Station	
Steam	555-1.12.8	1-25
Steam Smothering	555-1.12.8	1-25
Stock Numbers		
Hose	555-4.5.4	4-11
Nozzles	Table 555-4-6, 555-4.9.1.1	4-18, 4-20
Stowing Hose	555-4.5.6.2	4-11
Straight Stream, Water	555-1.12.3.1	1-22
Strainers, Firemain	555-2.3.7	2-10

Subject	Paragraph Number	Page Number*
Suction Hose	555-4.5.5	4-11
Supplementary Emergency Egress Device (SEED)	555-10.3.6.2	10-7
Switch, Pressure Operated	See Pressure Operated Switch	
Synthetic Jacket Soft Hose	555-4.5.4.b, 555-4.5.7	4-11, 4-11
Systems, Earlier	555-1.1.6	1-1
T		
Tactics	555-7.1	7-1
Tank, Accumulator	555-3.4.6.4, 555-3.4.6.5	3-25, 3-25
Tanks, AFFF	555-2.4.4.1, 555-3.1.6	2-19, 3-3
Telephone, X50J Soundpowered	555-2.7.8	2-23
Temperature, Ignition	See Ignition Temperature	
Testing, Atmosphere	555-7.10.3, 555-10.3.11.2	7-42, 10-13
Tetrahedron, Fire	See Fire Tetrahedron	
Theory of Extinguishment	555-1.11	1-21
Threads, Hose Fittings	555-4.5.3	4-10
Time Delay	555-2.8.2.3, 555-2.9.1.4.1, 555-2.9.2	2-26, 2-33, 2-33
	555-3.2.1.10, 555-3.3.2.7	3-15, 3-20
Torpedo Otto Fuel	555-1.7.4	1-14
Training	555-9.1	9-1
Transfer, Heat	See Heat Transfer	
Transfer Unit, CO_2	555-4.2.6.4	4-4
Transmission Lines, Sprinkler System Actuation	555-3.4.7.5	3-26
Transfer Pumps	See Pumps, Transfer	
Triangle, Fire	See Fire Triangle	
Two Speed Pump, AFFF	555-2.4.2.b	2-16
Total Protection Zone	555-7.13	7-45
U		
UEL (Upper Explosive Limit)	See Upper Explosive Limit	
Uninhibited Combustion Chain Reaction	555-1.4.2	1-7
Upper Explosive Limit (UEL)	555-1.4.3.4, 555-1.4.3.4.1	1-9, 1-9
V		
Valves	555-2.3.8	2-10
APC Cylinder	555-3.5.2.4	3-27
Check	See Check Valves	
Control	See Control Valves	
Cutout	See Cutout Valves	
Diaphragm Operated, Sprinkler System	555-3.4.4.3	3-23
Electrically Operated, Sprinkler System	555-3.4.4.5	3-23
Flood	See Flood Valve	
Hycheck	See Hycheck Valves	
Hydraulically Operated, Sprinkler System	555-3.4.5.2, 555-3.4.5.4, 555-3.4.6.1	3-23, 3-24, 3-25
Hytrol	See Hytrol Valves	
Manual Control, Sprinkler System	555-3.4.5.1	3-23
MIL-V-17501, Sprinkler System	555-3.4.4.1	3-23
Orifices, Sprinkler System	555-3.4.5.6	3-24
Piston Operated, Sprinkler System	555-3.4.4.4	3-23
Power Operated, Sprinkler System	555-3.4.5.5	3-24

Subject	Paragraph Number	Page Number*
Powercheck	See Powercheck Valves	
Powertrol	See Powertrol Valves	
Pressure Reducing	See Pressure Reducing Valves	
PRP	555-3.4.7.7	3-27
Relief	See Relief Valves	
Remote Control, Sprinkler System	555-3.4.5.2	3-23
Root	See Root Valves	
Spring Loaded Lift Check, Sprinkler System	555-3.4.5.3	3-24
Sprinkler Head, Sprinkler System	555-3.4.6.3	3-25
Three-Way, Sprinkler System	555-3.4.5.1, 555-3.4.6.2	3-23, 3-25
Type I, Sprinkler System	555-3.4.4.2	3-23
Type II, Sprinkler System	555-3.4.4.2	3-23
Vaporization, Flammable Liquid	555-1.4.3.2.1	1-9
Vari-Nozzle	See Nozzles, Vari-	
Vent, CO_2	555-3.3.2.6	3-20
Venting Heat	555-7.2.4.1.d, 555-7.11	7-2, 7-44
Ventilating		
Boundaries	555-2.2.1	2-1
Ducts	555-2.2.2	2-1
Systems	555-2.2	2-1
Ventilation	555-10.3.7.1	10-8
Vertical		
Offset Loop System	555-2.3.3.c	2-2
Spread of Fire	555-1.10.2, 555-7.2.8	1-18, 7-5
Trunks	555-7.14.6	7-49
Vital Electronics Space Fire	555-8.7, 555-9.5	8-8, 9-4
Voice Amplifier	555-7.14.5	7-48
W		
Walter Kidde	555-3.3.2.1.1, 555-3.3.2.7	3-18, 3-20
Washdown, Countermeasure	See Countermeasure Washdown	
Water		
Extinguishing Fire with	555-1.11.4.1	1-21
Firemain System	555-10.3.2.1	10-3
Fog	555-1.12.4	1-23
Volume	555-1.12.3.1	1-22
Watertight Boundaries	See Boundaries, Watertight Zone	
Weapons, Anti-Ship	555-1.7.2	1-14
Weapons Staging Area Sprinkling System	555-2.6.8	2-22
Weighing Cylinders, CO_2	555-4.2.6.1	4-4
Wet Type Sprinkler Systems	555-2.10.4, 555-2.10.6.2	2-38, 2-38
WIFCOM (Wire Free Radio Communication)	555-7.14.5	7-48
WILLIAM, Material Condition	555-2.3.8.1	2-10
WILLIAM, Root Valves	555-2.7.7	2-23
Wire Free Radio Communication (WIFCOM)	555-7.14.5	7-48
Wormald	555-3.3.2, 555-3.3.2.1.1, 555-3.3.2.7	3-18, 3-18, 3-20
Wrenches, Spanner	See Spanner Wrenches	
Wye-Gate	555-4.6.6	4-13
X		
X50J Soundpowered Telephone	555-2.7.8	2-23

Subject	Paragraph Number	Page Number*
	Z	
ZEBRA, Material Condition	See Material Condition ZEBRA	

REAR SECTION

NOTE

TECHNICAL MANUAL DEFICIENCY/EVALUATION EVALUATION REPORT (TMDER) Forms can be found at the bottom of the CD list of books. Click on the TMDER form to display the form.