# S9086-TL-STM-010/CH-572R1

**REVISION 1**

NAVAL SHIPS' TECHNICAL MANUAL

CHAPTER 572

# SHIPBOARD STORES AND PROVISION HANDLING

THIS CHAPTER SUPERSEDES CHAPTER 572 DATED 15 APRIL 1981

DISTRIBUTION STATEMENT C: DISTRIBUTION AUTHORIZED TO U.S. GOVERNMENT AGENCIES AND THEIR CONTRACTORS; ADMINISTRATIVE AND OPERATIONAL USE (15 APRIL 1981). OTHER REQUESTS SHALL BE REFERRED TO THE NAVAL SEA SYSTEMS COMMAND (SEA-03P8).

DESTRUCTION NOTICE: DESTROY BY ANY METHOD THAT WILL PREVENT DISCLOSURE OF CONTENTS OR RECONSTRUCTION OF THE DOCUMENT.

**PUBLISHED BY DIRECTION OF COMMANDER, NAVAL SEA SYSTEMS COMMAND.**

**13 NOV 1998**

## TABLE OF CONTENTS


Chapter/Paragraph Page

**572 SHIPBOARD STORES AND PROVISION HANDLING** . . . . . 572-1

**SECTION 1. REQUIREMENTS AND SAFETY PRECAUTIONS** . . . . . 572-1

572-1.1 PURPOSE . . . . . 572-1

572-1.2 REQUIREMENTS . . . . . 572-1

572-1.3 SAFETY PRECAUTIONS . . . . . 572-1

**SECTION 2. HANDLING EQUIPMENT** . . . . . 572-2

572-2.1 GENERAL . . . . . 572-2

572-2.2 DESCRIPTION OF HOISTS . . . . . 572-2
572-2.2.1 GENERAL. . . . . 572-2
572-2.2.2 DUMBWAITER. . . . . 572-2
572-2.2.2.1 First Type. . . . . 572-4
572-2.2.2.2 Second Type. . . . . 572-4
572-2.2.2.3 Safety Doors. . . . . 572-4
572-2.2.2.4 Control System. . . . . 572-4
572-2.2.2.5 Manual Operation. . . . . 572-4
572-2.2.3 WHIP HOIST. . . . . 572-4
572-2.2.3.1 Machinery Mounting. . . . . 572-7
572-2.2.3.2 Types. . . . . 572-7
572-2.2.3.3 Control System. . . . . 572-7
572-2.2.4 HAND WHIP HOIST. . . . . 572-7
572-2.2.5 ELECTRIC AND PNEUMATIC CHAIN HOISTS. . . . . 572-7
572-2.2.6 HAND CHAIN HOISTS. . . . . 572-14
572-2.2.7 ELECTRIC AND PNEUMATIC WIRE ROPE HOISTS. . . . . 572-17
572-2.2.8 TROLLEY HOISTS. . . . . 572-17
572-2.2.9 BRIDGE CRANE. . . . . 572-20

572-2.3 CARE AND OPERATION OF HOISTS . . . . . 572-20
572-2.3.1 SAFE OPERATION OF HOISTS. . . . . 572-20
572-2.3.2 GENERAL MAINTENANCE CONSIDERATIONS. . . . . 572-21
572-2.3.3 HOIST MAINTENANCE PROCEDURES. . . . . 572-22
572-2.3.3.1 Dumbwaiter Hoists. . . . . 572-22
572-2.3.3.2 Lubrication and Tension. . . . . 572-22
572-2.3.3.3 Whip Hoists. . . . . 572-22
572-2.3.3.4 Electric Hoists. . . . . 572-23
572-2.3.3.5 Pneumatic Hoists. . . . . 572-23
572-2.3.3.6 Trolley Hoists. . . . . 572-23
572-2.3.4 INSPECTION AND LOAD TEST. . . . . 572-23
572-2.3.5 TROUBLESHOOTING. . . . . 572-23
572-2.3.5.1 Electric Hoists. . . . . 572-23

**TABLE OF CONTENTS** - Continued

Chapter/Paragraph Page

572-2.3.5.2 Pneumatic Hoists. . . . . 572-23

572-2.4 DESCRIPTION OF CONVEYORS . . . . . 572-24
572-2.4.1 GENERAL. . . . . 572-24
572-2.4.2 GRAVITY CONVEYORS. . . . . 572-24
572-2.4.3 POWERED CONVEYORS. . . . . 572-26
572-2.4.3.1 Vertical Conveyors. . . . . 572-26
572-2.4.3.2 Horizontal Conveyors. . . . . 572-31
572-2.4.3.3 Care and Operation of Conveyors . . . . . 572-33

**SECTION 3. PERIODIC INSPECTION AND TEST** . . . . . 572-36

572-3.1 GENERAL . . . . . 572-36

572-3.2 INSPECTION . . . . . 572-36
572-3.2.1 GENERAL. . . . . 572-36
572-3.2.2 TYPES OF INSPECTION. . . . . 572-37
572-3.2.3 DISASSEMBLY FOR INSPECTION. . . . . 572-37
572-3.2.4 INSPECTION OF COMPONENTS. . . . . 572-37
572-3.2.4.1 Magnetic Brake Systems. . . . . 572-37
572-3.2.4.2 Drive Shafts, Couplings, and Open Gears. . . . . 572-37
572-3.2.4.3 Enclosed Reduction Gears. . . . . 572-37
572-3.2.4.4 Wire Rope Sheaves. . . . . 572-37
572-3.2.4.5 Wire Rope. . . . . 572-37
572-3.2.4.6 Wire Rope Fittings and Eye Splices. . . . . 572-38
572-3.2.4.7 Hoisting Blocks and Hooks. . . . . 572-38
572-3.2.4.8 Wire Rope Drums. . . . . 572-38
572-3.2.4.9 Machinery Foundations. . . . . 572-38
572-3.2.4.10 Structure, Structural Members, and Strongbacks. . . . . 572-38
572-3.2.4.11 Handrails, Ladders, Walkways, and Personnel Safety Guides. . . 572-38
572-3.2.4.12 Positive Limit Stops. . . . . 572-39
572-3.2.4.13 Electrical Components. . . . . 572-39
572-3.2.4.14 Warning Devices. . . . . 572-39
572-3.2.4.15 Emergency Stop Switches. . . . . 572-39
572-3.2.4.16 Operating and Cutout Limit Switches. . . . . 572-39
572-3.2.4.17 Bridge Crane Support Rails. . . . . 572-39
572-3.2.4.18 Crossover Rails. . . . . 572-39
572-3.2.4.19 Trolleys. . . . . 572-39
572-3.2.4.20 Manual Drive Assembly. . . . . 572-39
572-3.2.4.21 Load Block and Clevis or Hook. . . . . 572-39
572-3.2.4.22 Load Chain. . . . . 572-39
572-3.2.4.23 Air Supply System. . . . . 572-41
572-3.2.4.24 Pneumatic Motors and Brakes. . . . . 572-42
572-3.2.5 SHACKLES. . . . . 572-42

572-3.3 TESTING . . . . . 572-44
572-3.3.1 NO-LOAD TEST. . . . . 572-44

**TABLE OF CONTENTS** - Continued

Chapter/Paragraph Page

572-3.3.2 STATIC LOAD TEST. . . . . 572-45
572-3.3.3 DYNAMIC LOAD TEST. . . . . 572-47
572-3.3.4 RATED LOAD TEST. . . . . 572-48

572-3.4 INSPECTION AND TEST RECORDS . . . . . 572-49

## LIST OF TABLES


| Table | Title | Page |
|---|---|---|
| 572-2-1 | TWO-MAN RULE FOR VERTICAL PACKAGE CONVEYORS | 572-35 |
| 572-3-1 | SPECIFICATIONS FOR COIL LINK CHAIN | 572-41 |
| 572-3-2 | SPECIFICATIONS FOR ROLLER CHAIN | 572-41 |
| 572-3-3 | SHACKLE REPLACEMENT CRITERIA | 572-43 |
| 572-3-4 | SPECIFICATIONS FOR HOOK THROAT OPENINGS | 572-48 |

## LIST OF ILLUSTRATIONS


| Figure | Title | Page |
|---|---|---|
| 572-2-1 | DUMBWAITER | 572-3 |
| 572-2-2 | Whip Hoist | 572-5 |
| 572-2-3 | Whip Hoist Handling Basket | 572-6 |
| 572-2-4 | Electric Chain Hoist, Hook Suspension | 572-8 |
| 572-2-5 | Wire Rope Electric Hoist, Plain Trolley Suspension | 572-9 |
| 572-2-6 | Wire Rope Electric Chain Hoist, Plain Trolley Suspension | 572-10 |
| 572-2-7 | Wire Rope Electric Hoist, Trolley Suspension with Hand Geared Trolley | 572-11 |
| 572-2-8 | Pneumatic Chain Hoist, Hook Suspension | 572-12 |
| 572-2-9 | Pneumatic Chain Hoist, Plain Trolley Suspension | 572-13 |
| 572-2-10 | Hand Operated Ratchet Lever Chain Hoist, Hook Suspension | 572-14 |
| 572-2-11 | Hand Operated Chain Hoist, Hook Suspension | 572-15 |
| 572-2-12 | Hand Operated Chain Hoist, Trolley Suspension | 572-16 |
| 572-2-13 | Wire Rope Electric Hoist, Motorized Trolley Suspension | 572-17 |
| 572-2-14 | Birail Bridge Trolley Hoist | 572-19 |
| 572-2-15 | Gravity Conveyor | 572-25 |
| 572-2-16 | Vertical Conveyor, Package, Tray Type | 572-27 |
| 572-2-17 | Vertical Conveyor, Pallet, Tray Type | 572-28 |
| 572-2-18 | Powered Roller Conveyor | 572-32 |
| 572-2-19 | Powered Belt Conveyor | 572-33 |
| 572-3-1 | Inspection of Load Link Chain | 572-40 |
| 572-3-2 | Shackle Inspection Areas | 572-44 |
| 572-3-3 | Load Hook | 572-47 |

# CHAPTER 572

# SHIPBOARD STORES AND PROVISION HANDLING

## SECTION 1.

## REQUIREMENTS AND SAFETY PRECAUTIONS

### 572-1.1 PURPOSE

572-1.1.1 This section emphasizes safety precautions, requirements, instructions, and information intended to improve operation and use of shipboard handling equipment under the cognizance of the Naval Sea Systems Command (NAVSEA). Shipboard hoisting and conveying equipment described in this chapter does not include forklifts or hoisting and conveying equipment that are included in **NSTM Chapter 573, Booms; NSTM Chapter 600 (9120) Sec VII and X, Chocks and Bitts, Lashing Gear, TieDown Sockets, and Portable Covers; NSTM Chapter 589, Cranes; NSTM Chapter 700, Shipboard Ammunition Handling and Stowage; and NSTM Chapter 772, Elevators.**

### 572-1.2 REQUIREMENTS

572-1.2.1 In addition to the requirements given in this chapter, detailed handling and storage requirements and safety precautions are contained in **Navy Safety Precautions for Forces Afloat** , OPNAVINST 5100.19; Ship Information Books, and equipment manuals. No modification of hoisting or conveying equipment or of the arrangement of such equipment shall be made without prior approval of NAVSEA.

### 572-1.3 SAFETY PRECAUTIONS

572-1.3.1 Appropriate safety precautions as required by OPNAVINST 5100.19 must always be adhered to when operating and working in the vicinity of powered equipment. Specific precautions are:

a. The two-man rule shall be adhered to at all times during conveyor operation to prevent injury. See Table 572-2-1 for definition of two-man rule.

b. Personnel shall not place head or other parts of the body into a conveyor trunk during operation of the conveyor.

c. Personnel shall not ride in or on powered equipment except where specifically designated.

d. Personnel shall not wear loose articles of clothing that could become entangled in operating equipment.

e. Prior to performing maintenance, personnel shall make sure that equipment is properly secured and that power is turned off and will remain off.

f. Personnel shall stand clear of moving and suspended loads.

g. Personnel who operate and handle the equipment shall maintain positive footing and firm balance at all times.

h. Communication shall be maintained among operating personnel at all levels and compartments involved in load-handling operations to locate and assist in correction of any problems that may occur.

i. Stowage and handling areas shall be kept clean and uncluttered.

j. Load-handling equipment shall not be used unless it is known to be adequate and safe.

572-1.3.1.1 In addition to the safety precautions given in this section, precautions defined in Section 2 and Section 3 of this chapter and, in **NSTM Chapter 300, Electric Plant-General** for electrical equipment, shall be observed.

## SECTION 2.

## HANDLING EQUIPMENT

### 572-2.1 GENERAL

572-2.1.1 This section includes only general information considered essential to operation of load-handling equipment. Appropriate manuals and instructions, for the specific load-handling equipment used, shall be reviewed for detailed information on operation, maintenance, and repair. Where the Planned Maintenance System (PMS) is installed, preventive and corrective maintenance shall be conducted in accordance with procedures given on applicable Maintenance Requirements Cards (MRC's).

### 572-2.2 DESCRIPTION OF HOISTS

572-2.2.1 GENERAL. Hoists under the cognizance of NAVSEA are of the following types: dumbwaiter, whip hoist, hand whip hoist, electric and pneumatic chain hoists, hand chain hoists, electric and pneumatic wire rope hoists, trolley hoists, and bridge cranes. General descriptions of these types of hoists are given in paragraphs 572-2.2.2 through 572-2.2.9. For information about a specific installation, refer to the manufacturer's drawings and instruction books.

572-2.2.2 DUMBWAITER. A dumbwaiter is a semiautomatic electromechanical hoist operating in a structural trunk. The car of a dumbwaiter is arranged to carry ship stores of varying weights and package sizes. The parts and controlling mechanism of a dumbwaiter are illustrated in Figure 572-2-1.

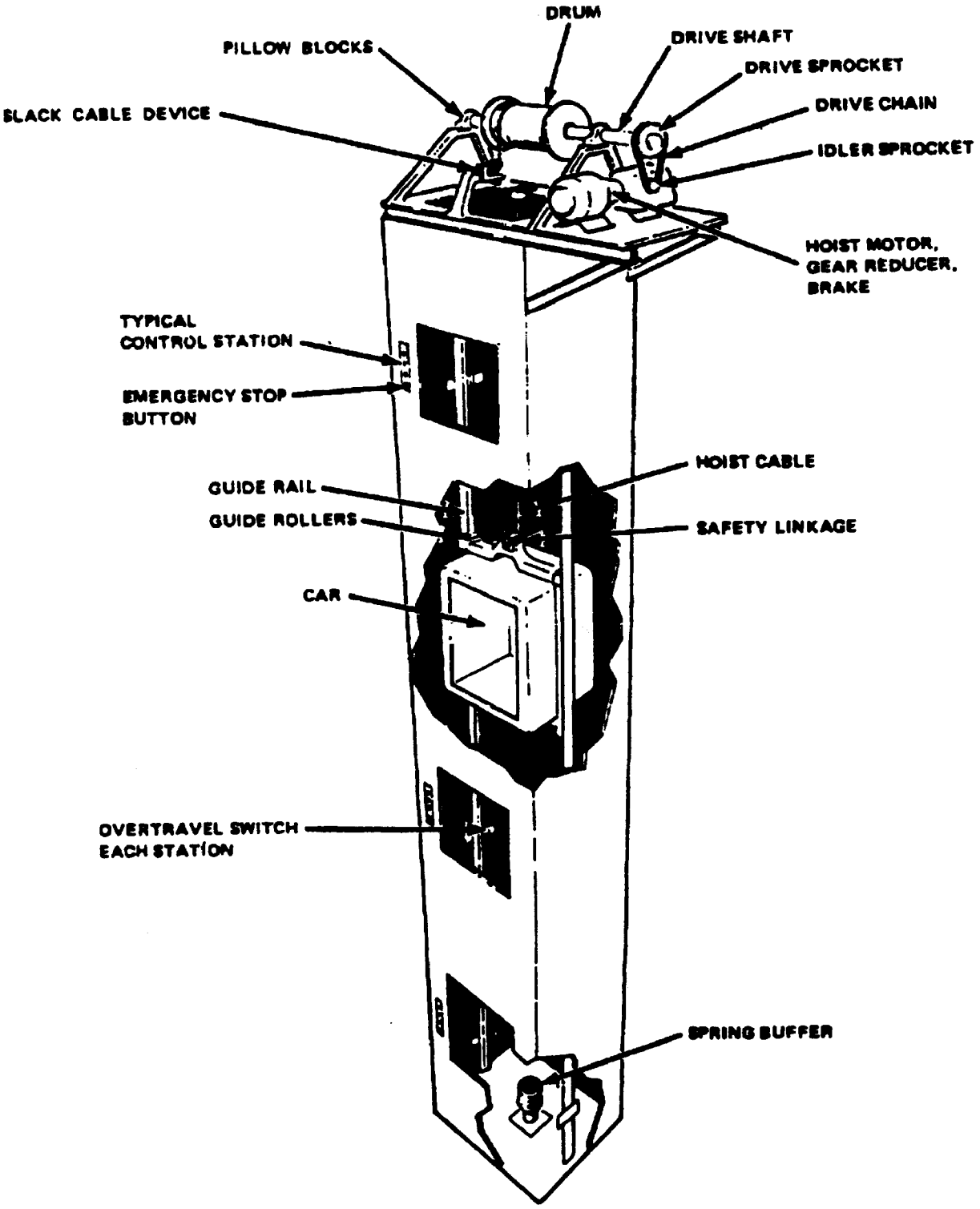


Figure 572-2-1 DUMBWAITER

572-2.2.2.1 First Type. One type of dumbwaiter has a single car suspended from a single endless roller chain at the side of the trunk. The chain is supported at the head of the trunk by a drive sprocket and guided at the bottom by an idler sprocket. The head sprocket is powered by a drive unit mounted near the top of the trunk. The car is guided and steadied by guide shoes that ride on guide tracks.

572-2.2.2.2 Second Type. A second type of dumbwaiter has a single car in a trunk fitted with guide shoes or rollers and has guide rails to position the car. The car is raised and lowered by one or more hoist wire ropes that spool on a drum powered by a drive unit. The drive unit is normally mounted at the top of the trunk.

572-2.2.2.3 Safety Doors. The trunk openings of dumbwaiters are usually equipped with watertight doors, and in some cases, with flame-seal (fumetight) doors. These doors are interlocked to the control circuit to ensure that the dumbwaiter will not operate unless the doors are closed.

572-2.2.2.4 Control System. The dumbwaiter control system is automatic, with pushbutton controls to select and send the dumbwaiter from each level served to any other level served. The dumbwaiter is operated after the trunk door(s) has been properly closed. Limit switches stop the car automatically at selected stations. The control circuit includes safety switches used to limit overtravel and to stop the dumbwaiter in an emergency. A slack cable device is provided to trip out the motor circuit and stop the hoist if the hoist line goes slack. A broken cable device is provided to stop the dumbwaiter car from falling if the hoist chain or wire rope fails.

572-2.2.2.5 Manual Operation. Manual lowering of the car in an emergency or power failure is usually possible, but this capability varies with the installation.

572-2.2.3 WHIP HOIST. A whip hoist consists of a structural car or basket operating in a trunk or on guides, with a single hoist line (either wire rope or chain) powered by an electric or air motor drive. Figure 572-2-2 shows the whip hoist and Figure 572-2-3 illustrates the details of the handling basket assembly.

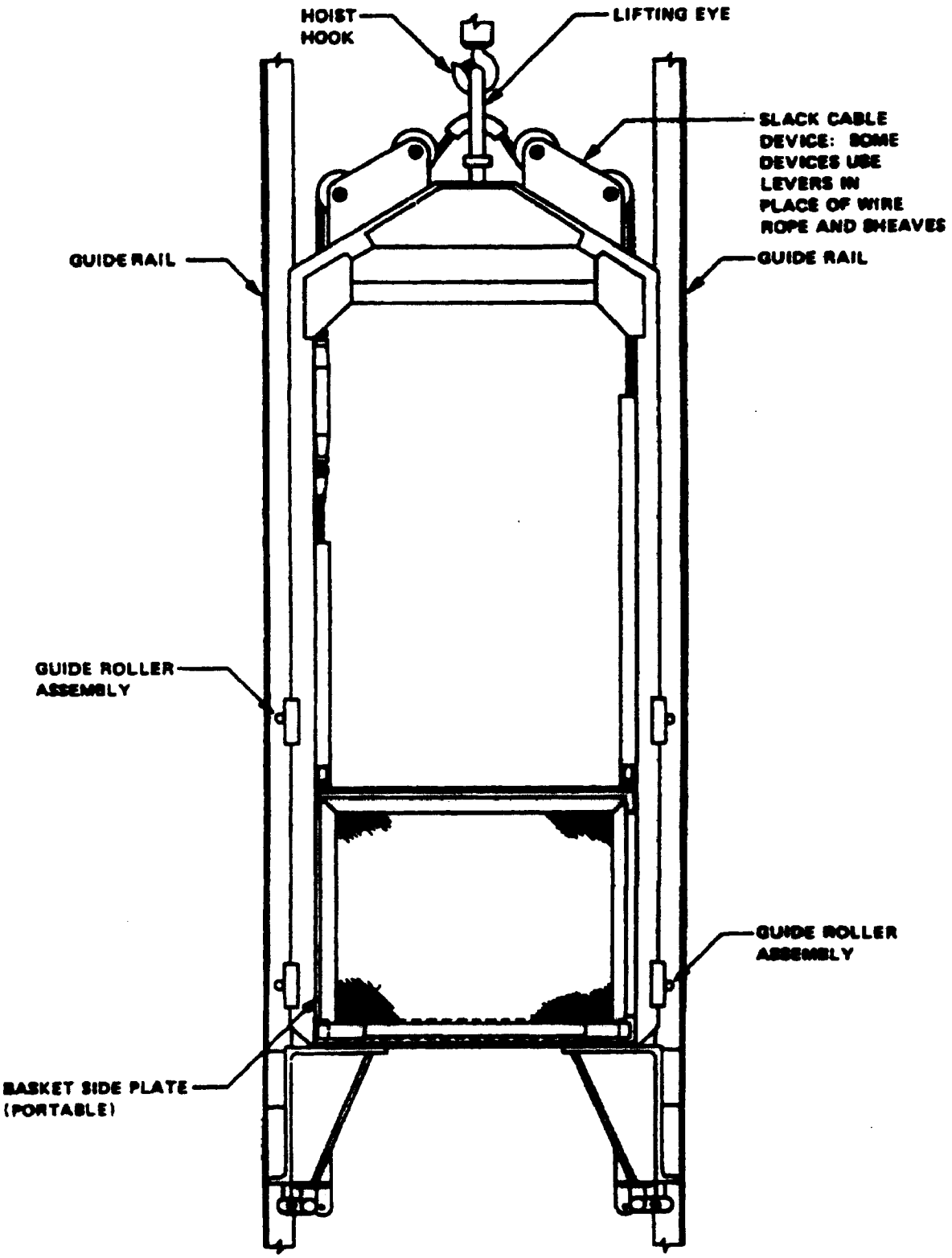


Figure 572-2-2 Whip Hoist

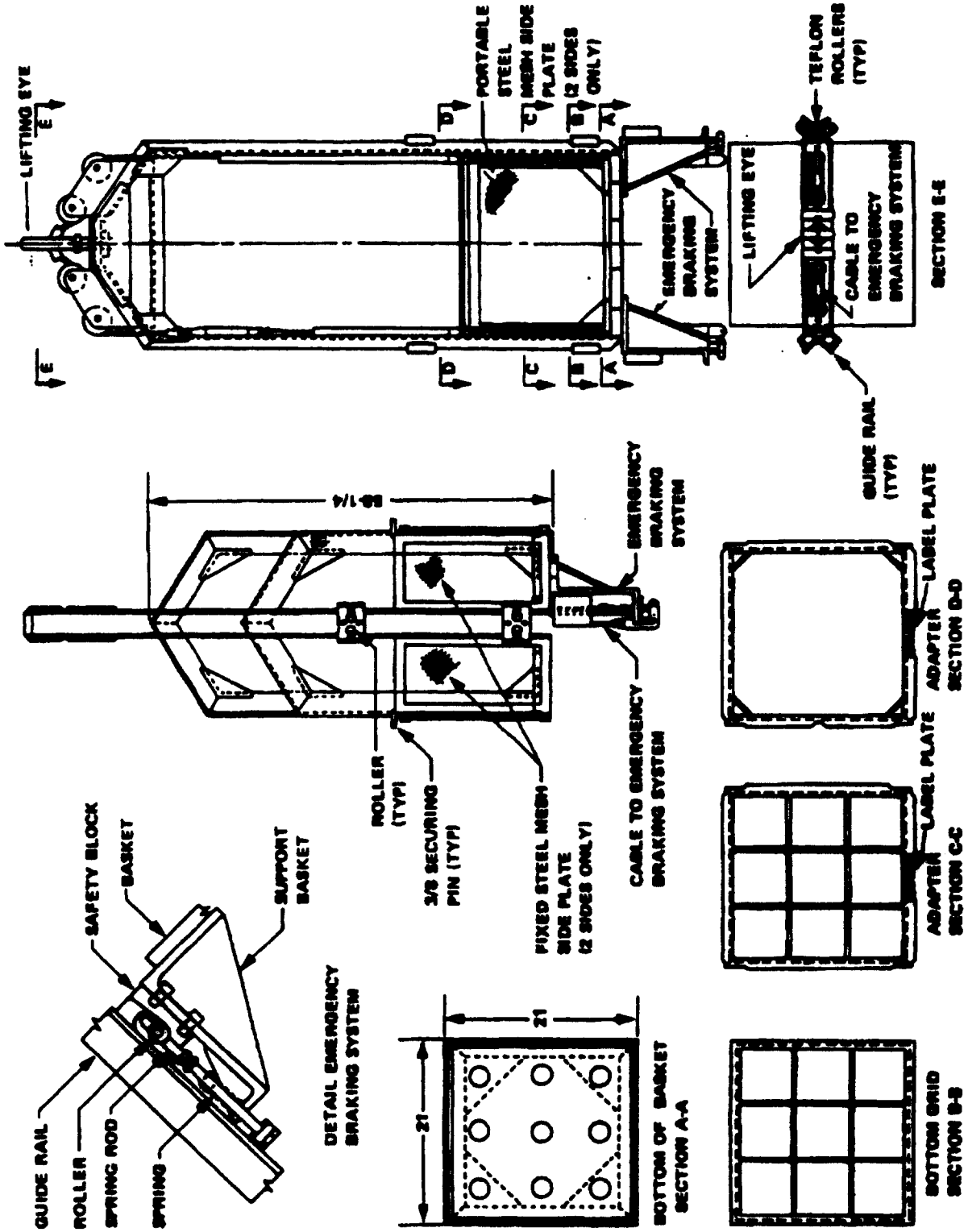


Figure 572-2-3 Whip Hoist Handling Basket

572-2.2.3.1 Machinery Mounting. The hoisting machinery for the whip hoist is mounted in a fixed position on deck, bulkhead, or overhead.

572-2.2.3.2 Types. The structural car type whip hoist is guided on rails. The car is equipped with clamps which grip the rails, if the hoist whip breaks, to prevent the car from dropping. The basket type is guided on wire rope or rigid tracks and does not have track clamps.

572-2.2.3.3 Control System. The whip hoist is controlled by a pushbutton control station secured to a pendant or mounted on a bulkhead. Voice or phone communications between levels served must be maintained to ensure safety of operations in installations which do not have controls at each operating level served.

572-2.2.4 HAND WHIP HOIST. A hand whip hoist consists of a single-part purchase with block(s) for hoisting loads by hand.

572-2.2.5 ELECTRIC AND PNEUMATIC CHAIN HOISTS. Each electric and pneumatic chain hoist consists of a high-speed chain block with a nonspooling chain, a reversible motor, a controller, and automatic stops mounted on a common frame. Automatic stops operate when the load hook reaches the upper and lower limit hook positions. An electric and pneumatic chain hoist may be provided with an auxiliary hand drive.

572-2.2.5.1 A pneumatic chain hoist may be used with a basket and guides similar to the whip hoist, except that the pneumatic chain hoist is portable and may be temporarily mounted on an overhead padeye or on a davit to aline with a hatch or trunk. A pneumatic chain hoist is also used without a basket and guides to handle ship stores and provisions.

572-2.2.5.2 Electric chain hoists are manufactured in accordance with MIL-H-15317. Pneumatic chain hoists are manufactured in accordance with MIL-H-2813. Several types of electric and pneumatic hoists are illustrated in Figure 572-2-4, Figure 572-2-5, Figure 572-2-6, Figure 572-2-7, Figure 572-2-8, and Figure 572-2-9.

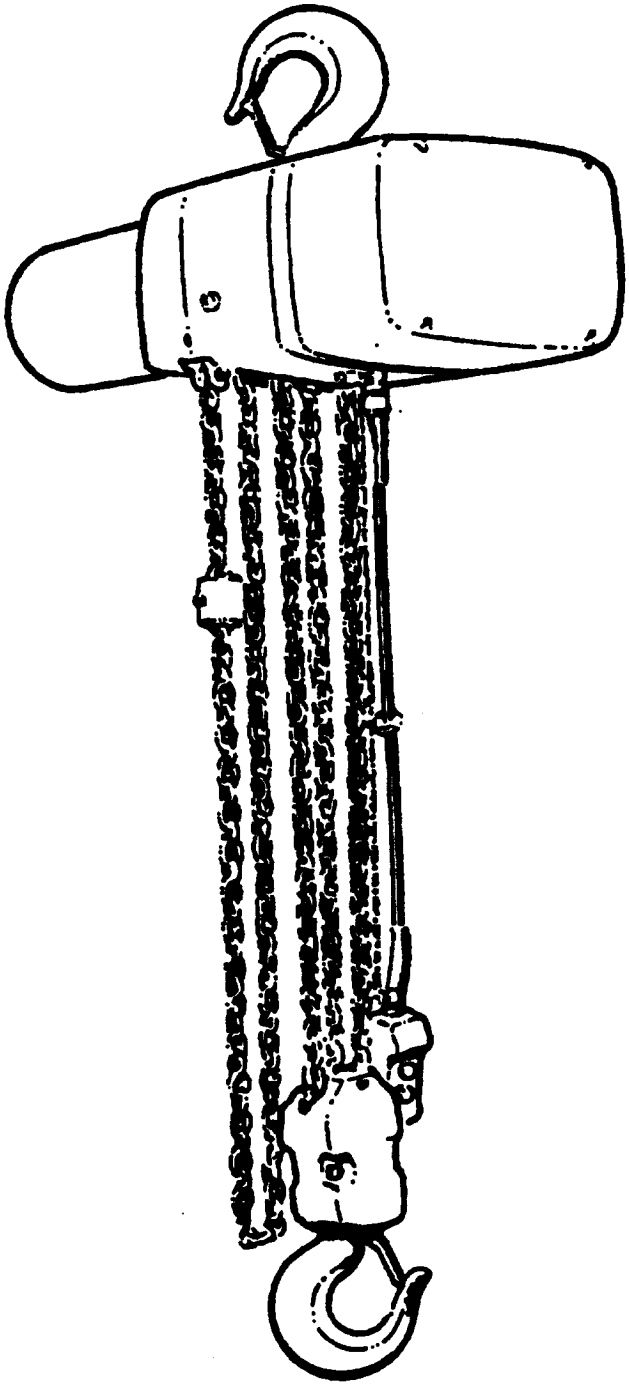

Figure 572-2-4 Electric Chain Hoist, Hook Suspension

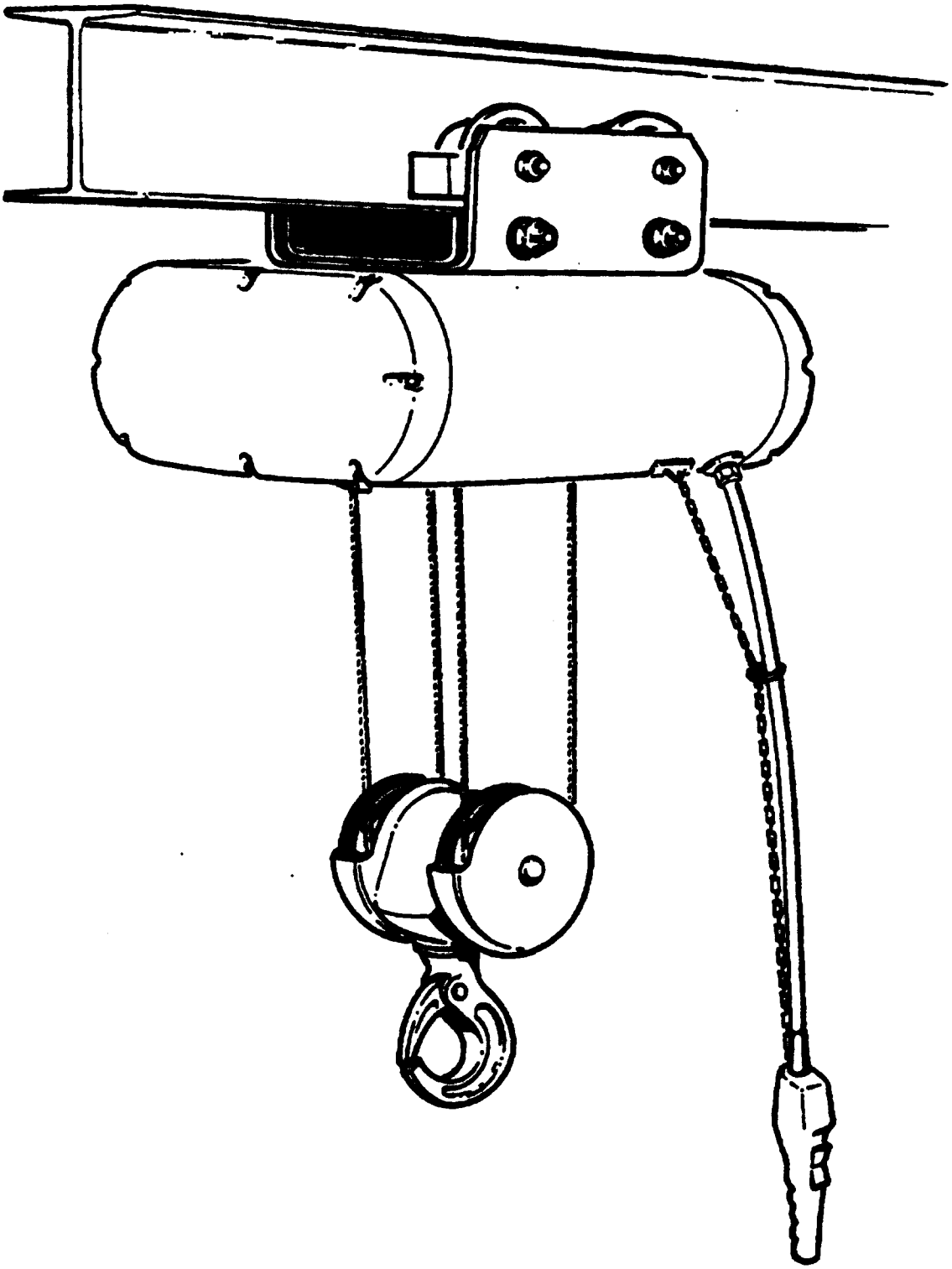

Figure 572-2-5 Wire Rope Electric Hoist, Plain Trolley Suspension

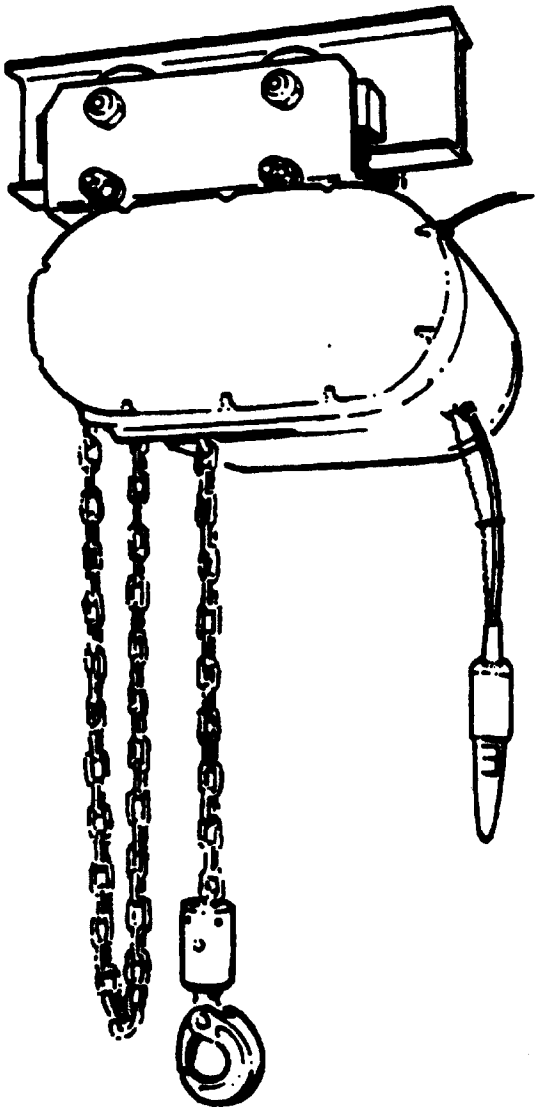

Figure 572-2-6 Wire Rope Electric Chain Hoist, Plain Trolley Suspension

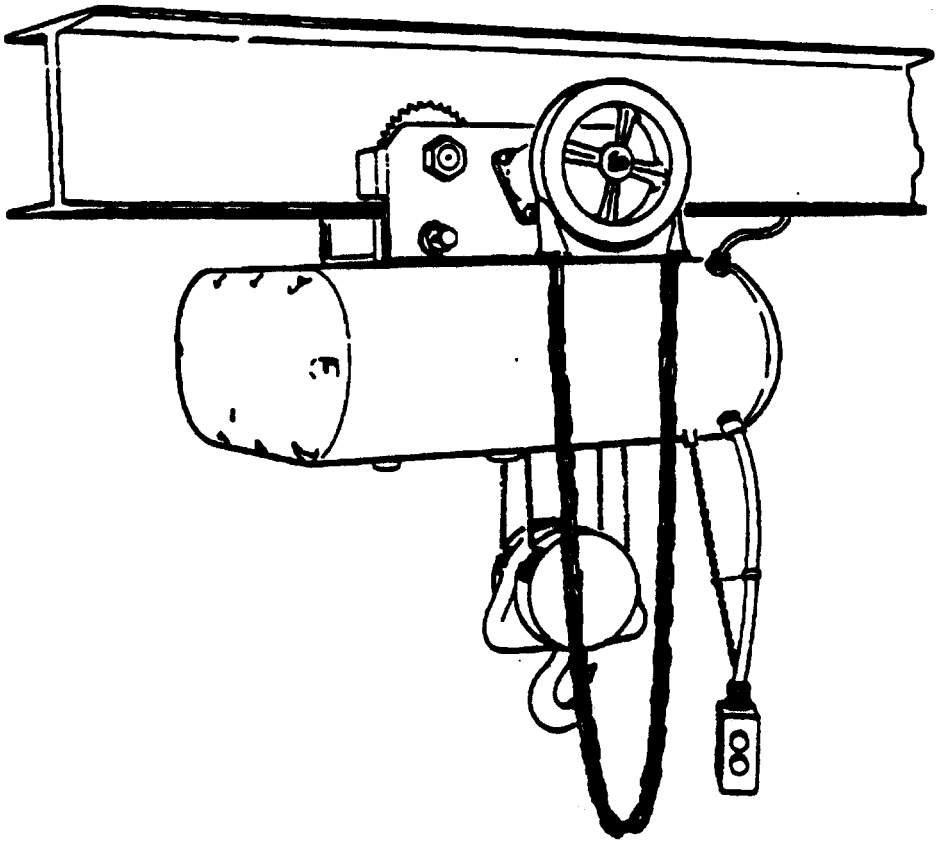

Figure 572-2-7 Wire Rope Electric Hoist, Trolley Suspension with Hand Geared Trolley

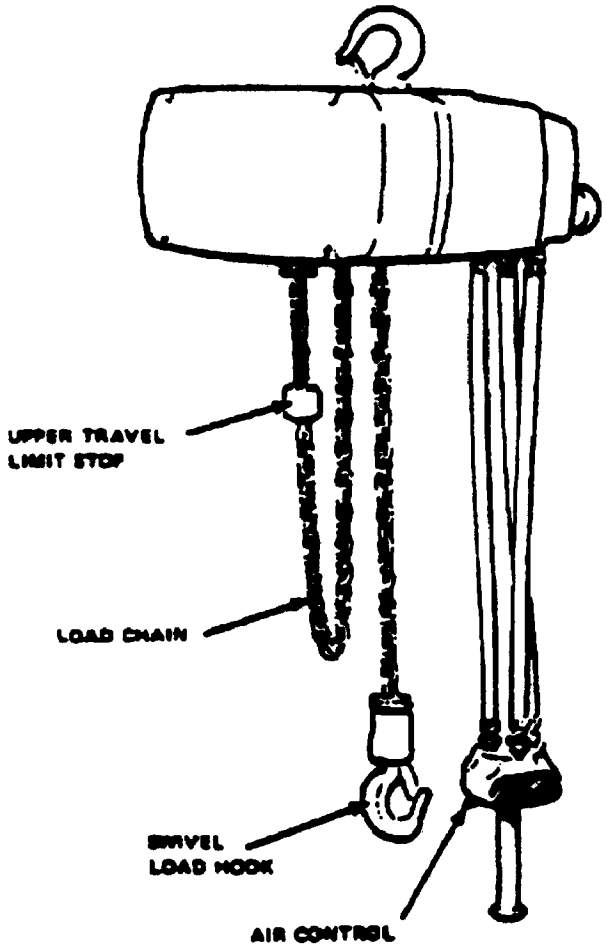


Figure 572-2-8 Pneumatic Chain Hoist, Hook Suspension

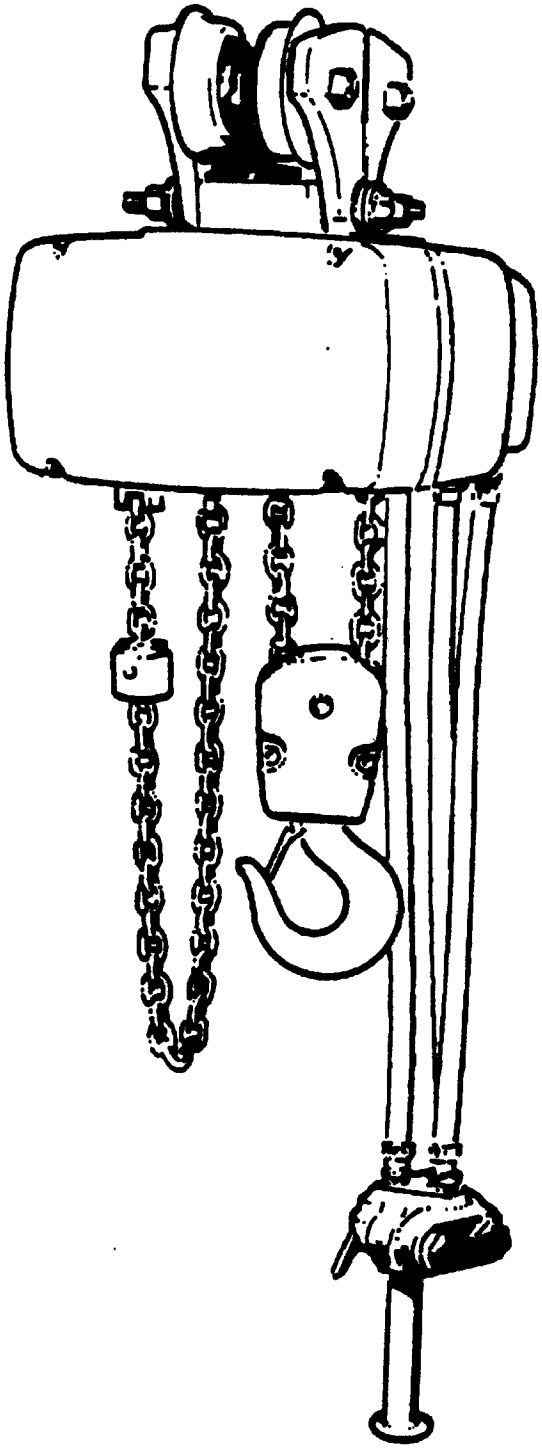

Figure 572-2-9 Pneumatic Chain Hoist, Plain Trolley Suspension

572-2.2.6 HAND CHAIN HOISTS. A hand chain hoist is hand-operated, with either a lever ratchet or a hand pull chain, with hook or trolley suspension. NAVSEA hand chain hoists are manufactured in accordance with MIL-H-904. Three types of hand-operated chain hoists are illustrated in Figure 572-2-10, Figure 572-2-11, and Figure 572-2-12.

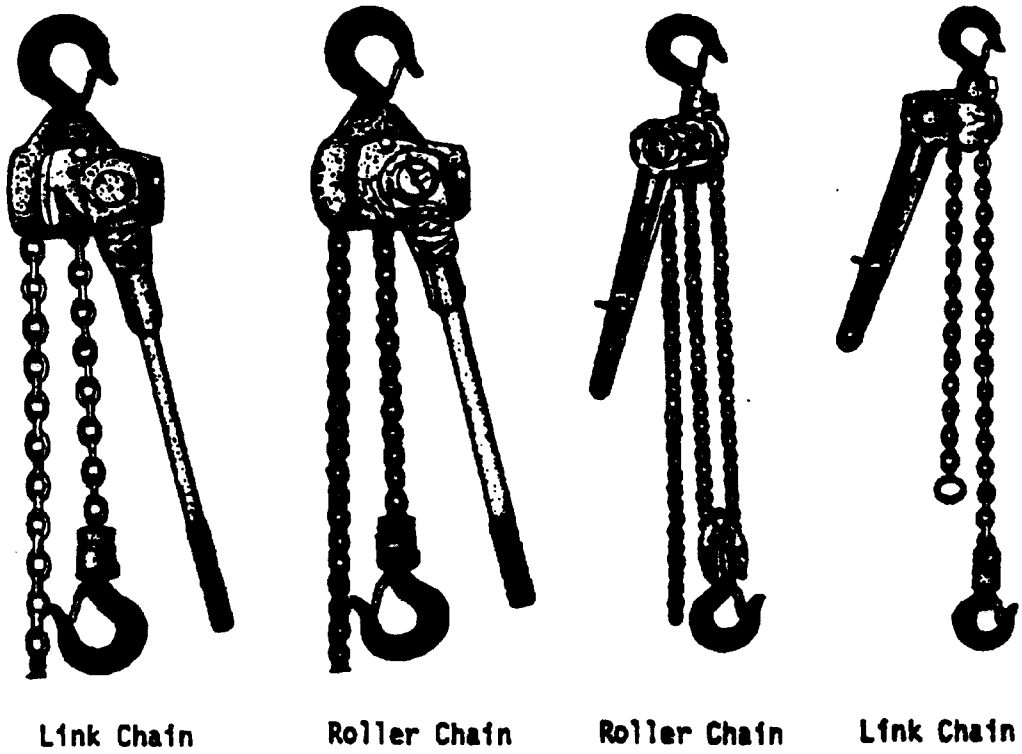


Figure 572-2-10 Hand Operated Ratchet Lever Chain Hoist, Hook Suspension

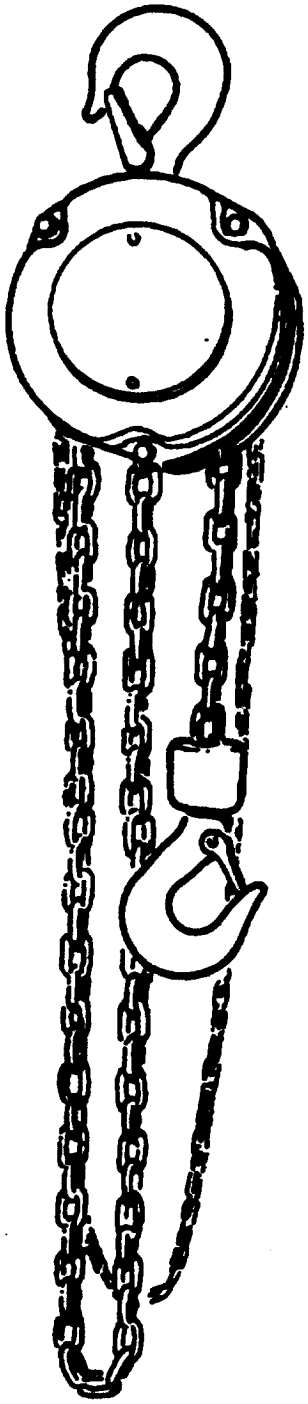

Figure 572-2-11 Hand Operated Chain Hoist, Hook Suspension

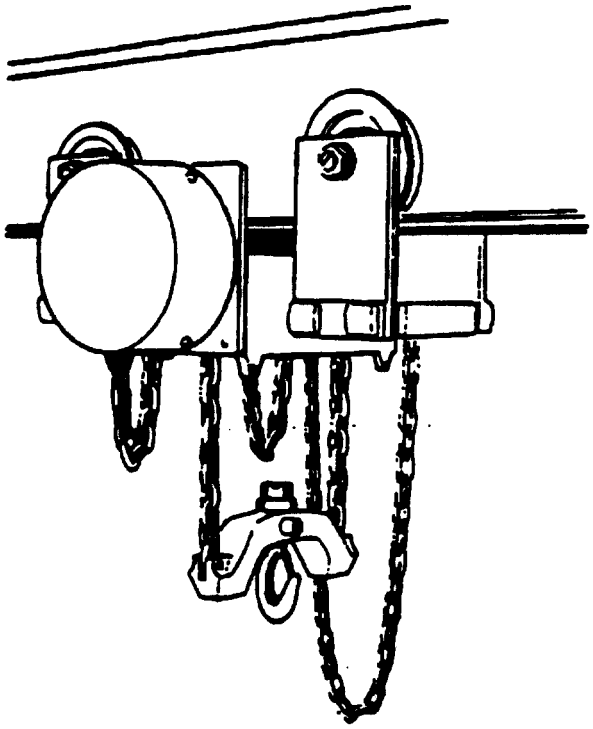

**Plain Trolley Hoist**

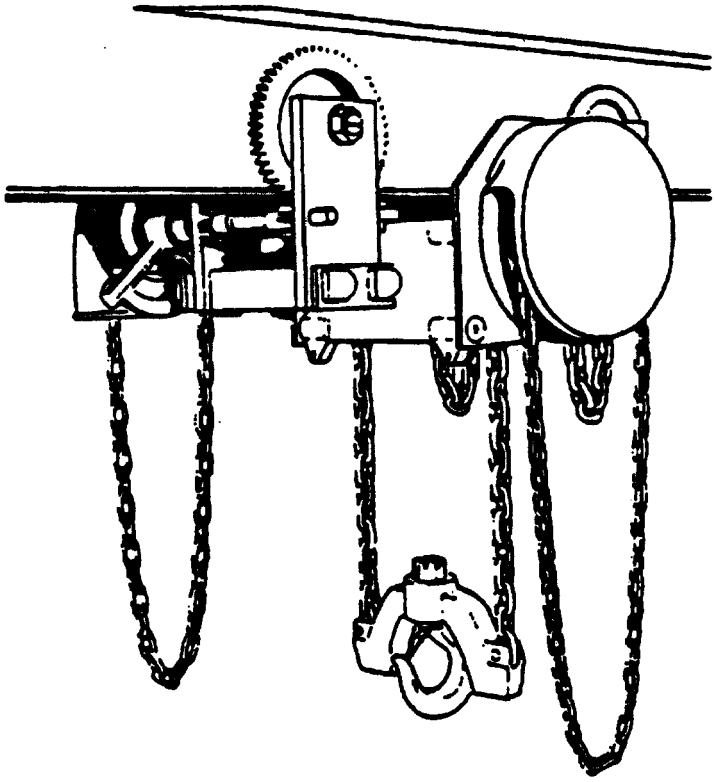

Figure 572-2-12 Hand Operated Chain Hoist, Trolley Suspension

572-2.2.7 ELECTRIC AND PNEUMATIC WIRE ROPE HOISTS. Electric and pneumatic wire rope hoists are similar to electric and pneumatic chain hoists except that wire rope is used as the hoisting line instead of chain. Wire rope hoists are normally larger in size than equivalent capacity chain hoists because a spooling drum is needed to store the wire rope. A wire rope electric hoist with a plain trolley suspension is illustrated in Figure 572-2-13.

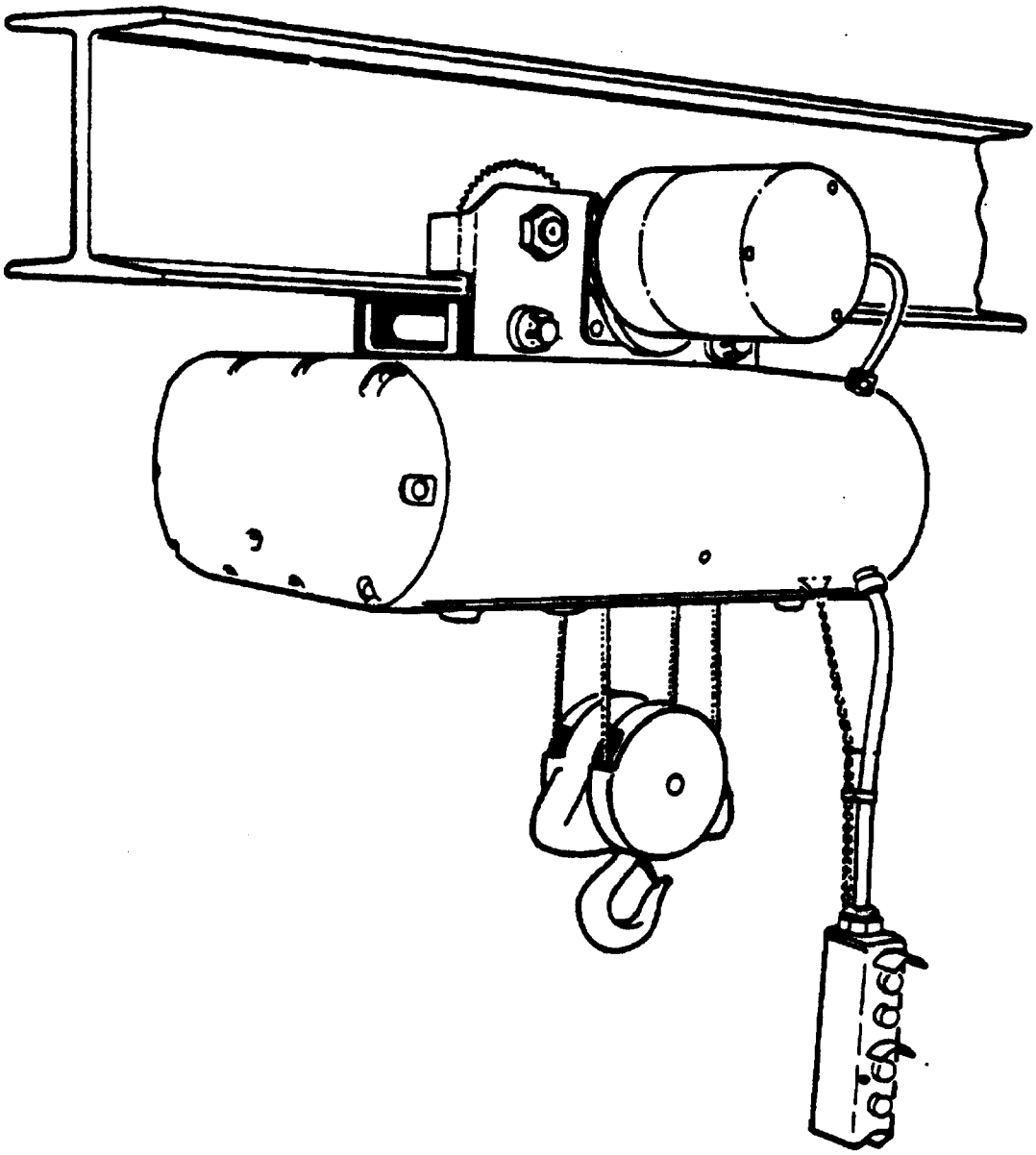

Figure 572-2-13 Wire Rope Electric Hoist, Motorized Trolley Suspension

572-2.2.7.1 Wire rope electric hoists are manufactured in accordance with MIL-H-15317. Pneumatic wire rope hoists are manufactured in accordance with MIL-H-2813.

572-2.2.8 TROLLEY HOISTS. A trolley hoist has wheels or a trolley and is used on overhead monorail or birail track systems and bridge cranes. The trolley can be either manually or power-driven and is moved by a

friction drive wheel, rack-and-pinion drive gears, or a chain and sprocket drive. Trolley hoists have some type of track clamp, brake, or other locking device to hold the trolley when traversing is not desired. Trolley hoists (except birail) are covered by the specification for hoists described in paragraphs 572-2.2.5.2 through 572-2.2.7.1.

572-2.2.8.1 A birail trolley hoist is usually a custom-built hoist not covered by military specifications. In addition, where headroom and space are critical, very compact pneumatic trolley hoists manufactured in accordance with MIL-H-23380 for 2000-pound capacity hoists, and MIL-H-24345 for 4000-pound capacity hoists may be procured. The birail trolley hoist is illustrated in Figure 572-2-14.

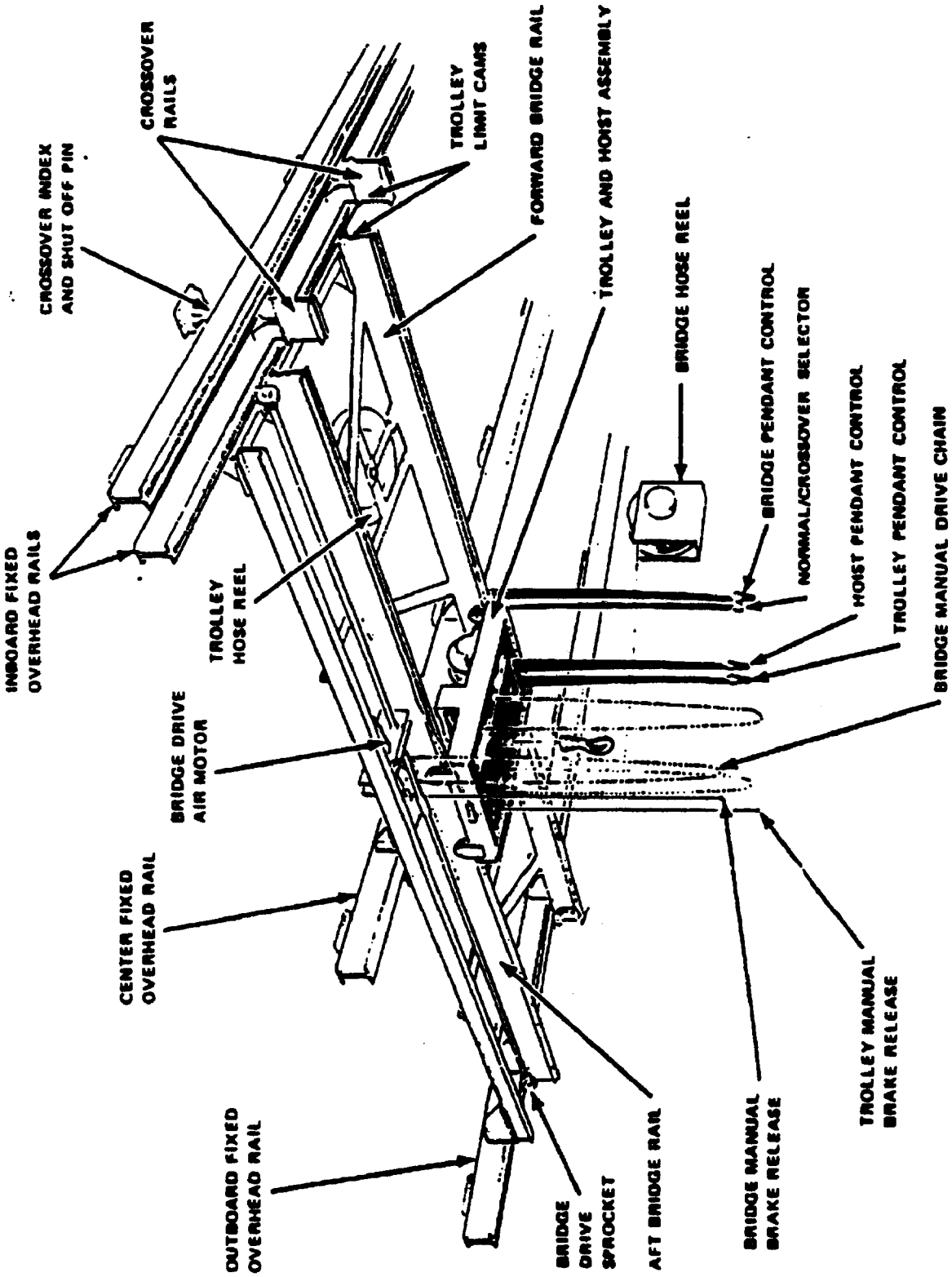


Figure 572-2-14 Birail Bridge Trolley Hoist

572-2.2.9 BRIDGE CRANE. A bridge crane is a structural frame that supports a trolley hoist. Cross beams are secured to end trucks that incorporate trolley wheels. The wheels roll on tracks mounted to a supporting structure. The hoist may be located above or below the cross beams depending on overhead clearance and lift height requirements. The hoist, hoist trolley, and bridge crane may be powered or operated manually. Drive for the bridge crane and hoist trolley may be a friction drive wheel, rack-and-pinion gear drive, or a hand chain and sprocket drive. Automatic brakes, track clamps, or other devices are used to prevent movement of the crane and hoist caused by ship movement. Mechanical and electrical track switches and control interlocks are used to position the bridge crane and to aid in transfer of hoists from one bridge crane to another or to a fixed track system.

## 572-2.3 CARE AND OPERATION OF HOISTS

572-2.3.1 SAFE OPERATION OF HOISTS. Frequent examinations and periodic inspections of hoisting equipment, as well as conscientious observance of safety rules, will save lives as well as time and money. Reading the safety rules pertaining to hoisting equipment, as detailed in paragraphs 572-2.3.1.1 and 572-2.3.1.2, can make an operator aware of dangerous practices to avoid and of precautions to take for his own safety and the safety of others. Taking precedence over any specific safety rule is the most important rule of all: USE COMMON SENSE.

**NOTE**

In addition to the specific safety rules given in paragraphs 572-2.3.1.1 and 572-2.3.1.2, safety precautions cited in paragraphs 572-1.3.1 through 572-1.3.1.1 should be observed while operating hoists.

572-2.3.1.1 Safety precautions to observe when operating hoists are:

a. Never lift or transport a load until all personnel are clear.

b. Do not allow any unqualified personnel to operate hoist.

c. Never pick up a load which is beyond the capacity printed on the hoist, except when conducting periodic overload tests. Overloading can be caused by jerking as well as by static overload.

d. Never carry personnel on the hook or the load.

e. Do not allow physically unfit personnel to operate hoist.

f. Do not operate hoist to extreme limits of chain or rope.

g. Avoid sharp contact between two hoists, between hoist and end post, and between hooks and hoist body.

h. Do not tamper with any parts of the hoist.

i. Never use the hoist rope or chain as a sling.

j. Do not allow attention to be diverted from load while operating hoist.

k. Never leave a suspended load unattended.

l. Do not attempt to lengthen load chain or to repair damaged load chain.

m. Do not use a defective hoist.

n. Do not use hoists, unless specifically designated, to handle weapons, ordnance, or nuclear material.

o. Do not throttle the air motor of a pneumatic hoist to hold a load suspended.

p. Never lift a load without a safety latch or mousing on the hook.

572-2.3.1.2 Safety practices to follow in operating hoists are:

a. Read and follow manufacturer's instruction, installation, and maintenance manuals. When repairing or maintaining a hoist, use only manufacturer's recommended parts and materials.

b. Read and follow all instruction and warning information on or attached to a hoist.

c. Remove the hoist from service and inspect and repair it, as necessary, if operator notices unusual performance or visible defects, such as a peculiar noise, jerky operation, travel in improper direction, or obviously damaged parts.

d. Establish a regular schedule of inspection and maintain records for all hoists, with special attention given to hooks, ropes, chains, brakes, limit switches, and, where provided, chain guide(s) and guide fasteners.

e. Check operation of brakes for excessive drift.

f. Check operation of limit switches.

g. Check for damaged hooks, ropes, or chain.

h. Keep load chain or rope clean and well-lubricated.

i. Check wire rope or chain for improper seating, twisting, kinking, wear, or other defects before operating the hoists.

j. Check wire rope and chain load cable for deterioration and damage which results in appreciable loss of strength. Replace if necessary.

k. Make sure a load clears neighboring stockpiles, machinery, or other obstructions when raising, lowering, or traversing the hoists.

l. Center hoist over the load before operating.

m. Avoid swinging of load or load hook when traversing the hoist.

n. Be sure the load attachment is properly seated in the saddle of the hook. Balance load properly before handling. Avoid tip-loading.

o. Pull in a straight line, so that neither hoist body nor load chain or rope are angled around an object.

p. Make sure to take up slack slowly.

q. On lever-operated hoists, always release handle gradually when under load to avoid a spinning handle.

r. Inspect track position and track alignment when transferring trolley hoist from one track system to another track system.

s. Make sure air lines for pneumatic hoists are free of moisture before operating hoists. Drain air strainer.

t. Stow portable hoists in an upright position to prevent oil in the internal lubricators from running onto the brake lining.

u. Ensure hook has a safety latch or is moused whenever a load is lifted.

572-2.3.2 GENERAL MAINTENANCE CONSIDERATIONS. Preventive and planned maintenance of hoists shall be carried out in accordance with the PMS and planned maintenance shall be conducted in accordance with instructions provided on applicable MRC's. If MRC's do not exist for a particular type of equipment, the using activity shall develop an interim program that includes periodic lubrication, adjustment, and inspection of equip-

ment in accordance with maintenance information provided in this chapter and in the technical manual for the equipment. All parts subject to wear shall be inspected at regular intervals, and all parts that are damaged or operate in a manner that will create an unsafe condition shall be repaired or replaced. Existing MRC's which do not meet these requirements should be reported to NAVSEA.

572-2.3.2.1 Qualified personnel shall service hoisting equipment, using staging or telescoping platforms or lifts as needed to provide working access to components requiring maintenance. Before starting maintenance work, lower any dumbwaiter car and any suspended hoist load to a position of rest or stowage. Render the power circuit inoperative and attach suitable warning tags at station controls.

572-2.3.2.2 While servicing dumbwaiters or hoists, place signs stating DO NOT OPERATE, in letters at least 2 inches high, on dumbwaiter or hoist trunks adjacent to loading and discharge openings. Secure trunk door(s) against unauthorized opening.

572-2.3.2.3 Keep a light film of oil, MIL-L-17331, symbol 2190 TEP, or other general-purpose oil, on the surface of load chains to prolong life of the chain. Other lubrication requirements shall be in accordance with the maintenance manual furnished with the equipment. Keep brake shoes free of lubricants.

572-2.3.2.4 Where installed, flame-seals on dumbwaiter or trunk doors shall be kept in operating condition at all times.

572-2.3.2.5 Carefully examine shaft friction couplings and clutches and test before use to make sure they function properly. These couplings are set to slip, to limit motor output torque, when a hoist load jams or when hoist is overloaded.

572-2.3.2.6 When requests are submitted for new or replacement hoists (or for repair parts for those in service), care shall be taken to give all information available, such as name of manufacturer, capacity, catalog number, part number in catalog, type, track size, minimum track radius, minimum lift height, available current and voltage, lift speed(s), overhead height, and clearance requirements for low-headroom hoists. Any request for hoists procured to military specifications must include specific ordering data defined in those specifications.

572-2.3.3 HOIST MAINTENANCE PROCEDURES. Specific information pertaining to maintenance of the various types of hoists is given in paragraphs 572-2.3.3.1 through 572-2.3.3.7.

572-2.3.3.1 Dumbwaiter Hoists. Inspect dumbwaiter car and hoist quarterly for condition of load cable (chain or wire rope), motor brake, friction clutches, overtravel limit devices, door interlock control switches, and safety devices.

572-2.3.3.2 Lubrication and Tension. Keep chain well-lubricated with lubricant, MIL-L-17331, symbol 2190 TEP. Adjust chain tension for any chain-supported car at the idler (lower) chain sprocket, as specified in the instruction book furnished with the equipment.

572-2.3.3.3 Whip Hoists. Examine whip hoists quarterly to determine the condition of the load line (chain or wire rope), slack cable device, broken cable device, limit stops for extreme load hook positions, and the hoist brake. Frequently examine guide rails and rollers or shoes for wear, proper lubrication, alinement of track joints, and for minimum gap between track sections.

572-2.3.3.4 Electric Hoists. Prior to each use, examine electric cables on portable electric hoists for wear, kinks, and defective insulation. Electrical connectors should have means for protective ground circuit.

572-2.3.3.5 Pneumatic Hoists. In cases where pneumatic hoists are used in freezing temperatures, ethylene glycol antifreeze (Federal Specification OA-548) may be substituted for lubricants normally used in in-line lubricators. The glycol prevents ice from forming in the lines, acts as a lubricant, and protects against corrosion.

572-2.3.3.6 Trolley Hoists. Examine trolley wheels for binding or flat spots and for full rolling contact with the track rail; lubricate trolley wheels quarterly to ensure that wheels turn freely on their axles. Inspect hoist connection to the trolley for looseness. Ensure that the load equalizing pin is freely, and that the friction drive wheel provides traction for trolley motion, and securely attached between the trolley side frames. Ensure that the trolley gear or chain drive works trolley track clamps can resist trolley motion. Examine fittings supporting trolley tracks quarterly for looseness.

572-2.3.3.7 Examine load line (chain or wire rope) and hooks quarterly for kinks or broken wires in wire rope, deformed chain links, or reduction of link bar diameter in excess of 10 percent. Determine if any hook(s) is permanently deformed (throat opening increased) or any safety latch is damaged.

572-2.3.4 INSPECTION AND LOAD TEST. Hoisting equipment shall be inspected and tested as described in Section 3 of this chapter.

572-2.3.5 TROUBLESHOOTING. Repair time can be minimized by using logical troubleshooting techniques to determine defective areas or parts, prior to disassembly. Troubleshooting techniques are given in paragraphs 572-2.3.5.1 and 572-2.3.5.2 but information in the technical manuals should also be used.

572-2.3.5.1 Electric Hoists. Poor performance of electric hoists is often caused by problems external to the hoist motor. Electrical power supply should be checked as described in **NSTM Chapter 300, Electric Plant-General** . Inspect power and electrical connections for breaks, faulty insulation, and poor grounds. Inspect control switches for dirty or faulty contacts and poor circuit continuity. Inspect controller contacts for signs of welding, arcing, or pitting. Check brake operation and adjust to ensure that the brake does not drag when power is supplied to motor and that it is properly engaged when power is off.

572-2.3.5.2 Pneumatic Hoists. If a pneumatic hoist loses power during operation, the air supply should be checked before the hoist is disassembled. The malfunction may be in the air system rather than in the hoist. Air pressure checks should include the following procedures:

1. Verify that the air pressure at hoist is correct while the hoist is not operating and that the pressure does not drop appreciably when hoist is operated. Check the hoist technical manual for proper range (normally pressure should be between 80 and 100 lb/in$^2$ g).
2. If pressure is correct, clean and check air hose filter. Clean hoist pendant control.
3. If pressure is low, check air hose and hose connections for leaks. Vent air pressure to clear air line and to check for moisture; drain moisture if necessary. Clean air line filter. Check air line lubricator for correct oil level. Adjust pressure regulator. Verify from equipment technical manual that air supply hose is the proper size to supply the required airflow when the hoist is operated at rated load and speed.
4. Check air pressure at compressor. If pressure is low, adjust pressure regulators to required pressure setting.

## 572-2.4 DESCRIPTION OF CONVEYORS

572-2.4.1 GENERAL. Two types of conveyors are used for shipboard handling (gravity and powered). The two types of conveyors are described in paragraphs 572-2.4.2 through 572-2.4.3.2.

572-2.4.2 GRAVITY CONVEYORS. Gravity conveyors may be wheel, roller, or ball type with straight, curved, or angular sections provided in the quantities and lengths required to facilitate stores strikedown. Folding conveyor stands are furnished with each conveyor section. Conveyors are usually 18 inches wide but may be 12 inches wide for use in restricted passageways. Straight sections are provided in 5-and 10-foot lengths. Most conveyors are of the roller type; as an exception, those provided to handle dry provisions, and chilled and frozen food have nylon wheels. The gravity conveyor is illustrated in Figure 572-2-15.

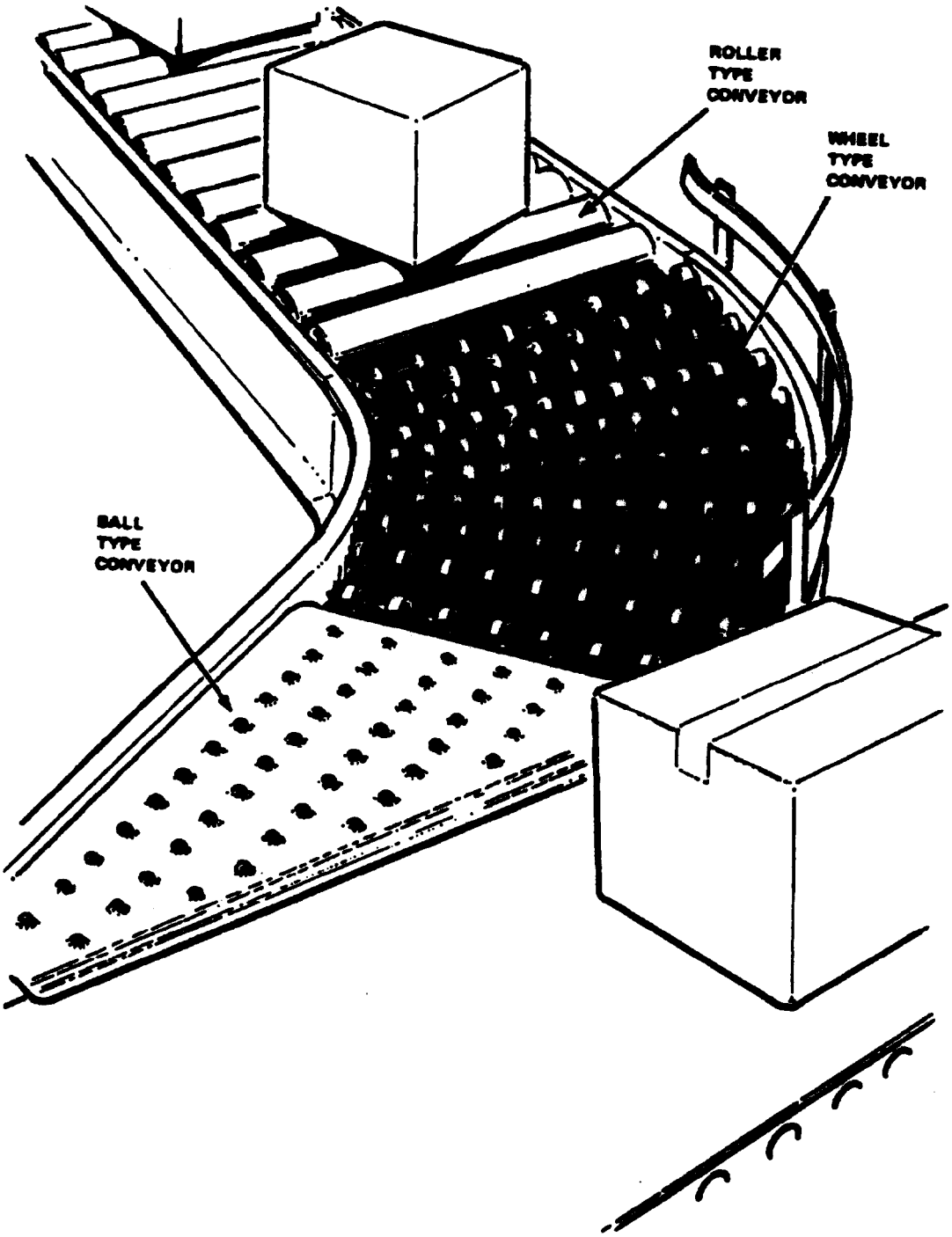


Figure 572-2-15 Gravity Conveyor

572-2.4.3 POWERED CONVEYORS. Powered conveyors are configured either vertically or horizontally. The two types are described in paragraphs 572-2.4.3.1 through 572-2.4.3.2.

572-2.4.3.1 Vertical Conveyors. Vertical conveyors for shipboard use are in accordance with MIL-C-23218, **Conveyor, Vertical, Tray Type, 100 Pound Package Tray Capacity** and MIL-C-23842, **Conveyor, Vertical, Tray Type, For 3000 Pound Palletized Loads** . Two types of vertical conveyors are illustrated in Figure 572-2-16 and Figure 572-2-17.

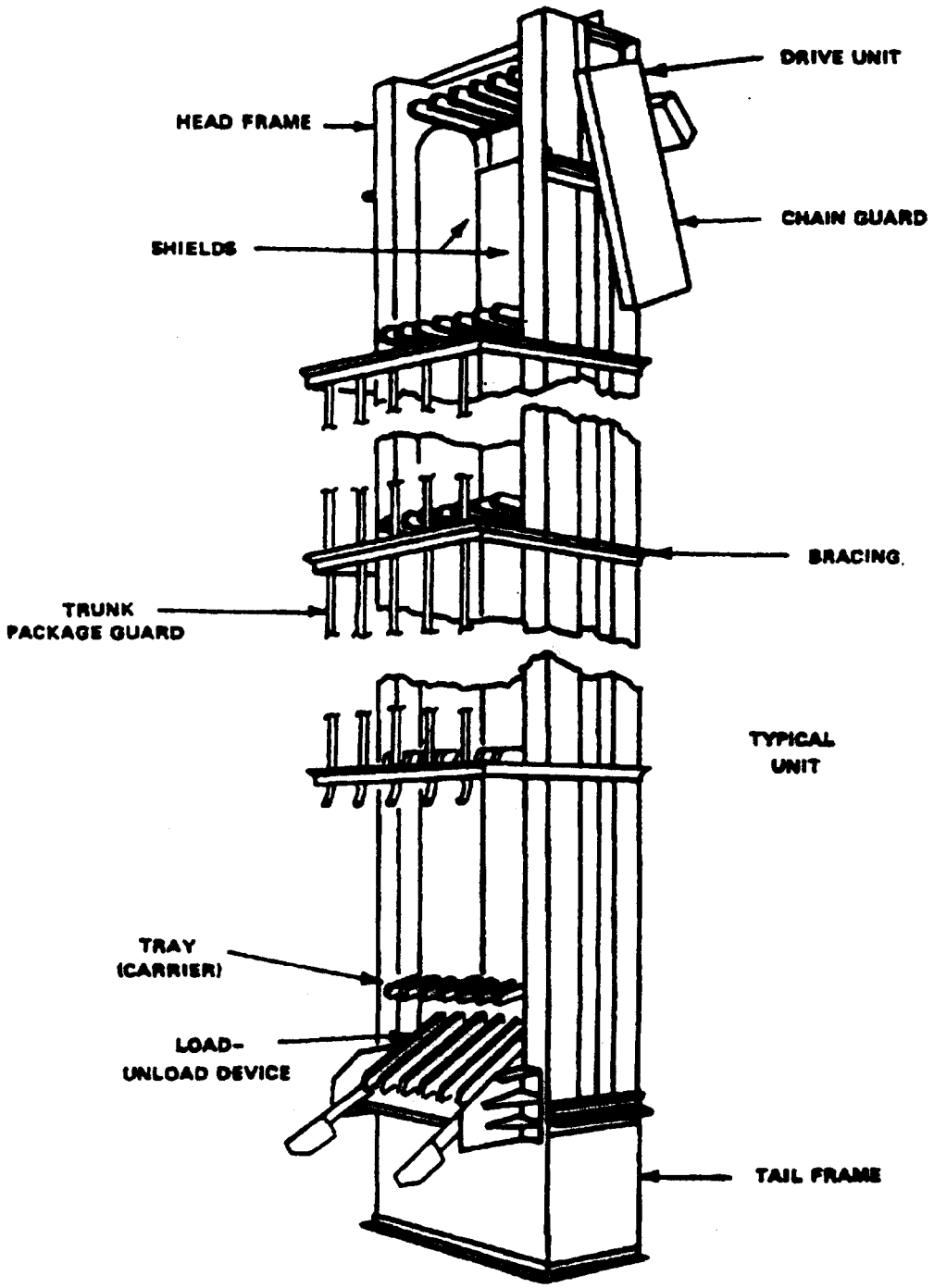


Figure 572-2-16 Vertical Conveyor, Package, Tray Type

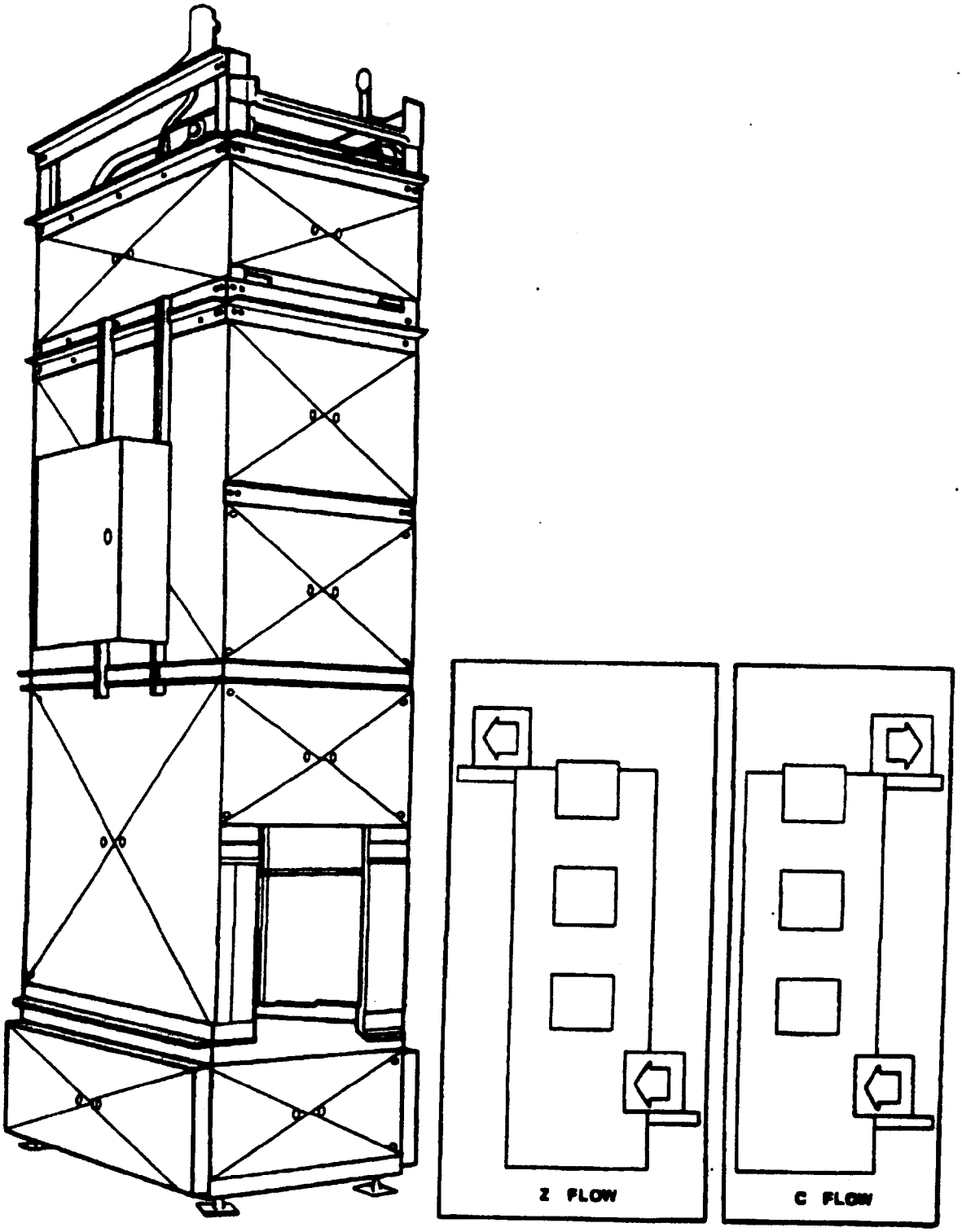


Figure 572-2-17 Vertical Conveyor, Pallet, Tray Type

572-2.4.3.1.1 Vertical conveyors consist of the following:

a. Structural frame (head, tail, and intermediate sections)

b. Drive system

c. Conveying system

d. Operating controls

e. Safety devices

572-2.4.3.1.2 The conveyor frame may be designed as a truss frame installed in a trunk closure, or a structural trunk may provide the framework. The conveyor trunk has door openings at load stations. Shields running the length of the conveyor provide a smooth unbroken surface in the area of the moving tray loads and isolate the load side from the idle return side of the conveyor tray cycle.

572-2.4.3.1.3 In addition to the drive motor, drive system elements are: friction clutch (package conveyor), magnetic clutch (pallet conveyor), speed reducer, motor brake, drive shafts with chain sprockets, and connecting roller chain. The drive units are located at the head section of the conveyor frame and can be positioned at the side, back, or top of the conveyor.

572-2.4.3.1.4 The conveying system consists of chain sprockets mounted in the head and tail sections of the conveyor frame; each set of chain sprockets is connected by an endless roller chain. The carrier (tray) chain is driven by the head chain sprockets. Each tray is supported on two sides by the carrier chain and each tray is guided (attitude maintained) on two sides by cam guide arms with rollers that ride in guide tracks mounted to the conveyor frame. The tail sprockets can be moved vertically to adjust the carrier (tray) chain tension between the chain sprockets. The carrier (tray) is rotated from a horizontal attitude to a vertical attitude at the head and tail sections of the conveyor trunk to conserve trunk space for the idle portion of the conveyor tray cycle. For package conveyors, the carriers (trays) are of forked-finger construction to permit passage through the alternate finger space of the load-unload device located at load stations. For pallet conveyors, the carriers (tray) have an unbroken surface and are unloaded by forklift truck.

572-2.4.3.1.5 The operating controls consist of a motor controller which provides electrical power for conveyor electrical components, a switching network for operation of electrical circuits, and control stations which provide operating switches for directional control, **UP-DOWN** ; for stopping the conveyor, **STOP** ; and for starting the conveyor,**RUN** . An **EMERGENCY RUN** pushbutton permits operating the conveyor when the thermal overload relay in the motor controller has tripped. A communications system is provided at all control stations for operating personnel to control conveyor operation.

572-2.4.3.1.6 Safety devices are installed for the safety of operating personnel and to increase the reliability of the conveyor. Safety devices are described in paragraphs 572-2.4.3.1.7 through 572-2.4.3.1.18.

572-2.4.3.1.7 The lockout device, located at each control station, secures the operating controls from unauthorized operation. When secured, the lockout device permits operation of the **STOP** pushbutton from each control station to stop conveyor motion.

572-2.4.3.1.8 An audible warning device is provided at each load station. A time-delay relay (with a 3 to 3-1/2 second delay) is provided in the conveyor **UP** and **DOWN** control circuitry. The signal device is integrated into

the conveyor control circuitry. This energizes the sound devices at load station(s) that have the trunk door open prior to movement of the conveyor. The sound signal continues for the duration of the time-delay. The sound signal device is a buzzer or vibratory horn with an adjustable sound level of 40 to 75 decibels (dB).

572-2.4.3.1.9 The package conveyor has a load-unload device capable of loading and unloading the conveyor at each conveyor load station, except the top station. The load-unload device is a one-piece design and is a forked-finger construction that permits passage of the tray. The load-unload device is located approximately 28 to 34 inches above the deck. The trays are self-loading at the load stations. Packages are placed on the horizontally positioned load-unload device and the conveyor is run in the **UP** direction. The trays are self-unloading when the load-unload device is set in the inclined position and the conveyor is run in the **DOWN** direction. The load-unload device is hinged, enabling the device to swing out of the path of an upcoming load if the load-unload device is inadvertently left inserted in the conveyor. The load-unload device can be set in position without the need for personnel to climb into the conveyor trunk.

572-2.4.3.1.10 The load-unload device can be placed in three positions.

1. Load position (horizontal) for **UP** direction loading.
2. Unload position (30 degree incline) for **DOWN** direction unloading.
3. Stowed position (vertical).

572-2.4.3.1.11 On the package conveyor, an interlock switch is provided at each load-unload device to prevent downward operation of the conveyor when the load-unload device is in the load position.

572-2.4.3.1.12 On the package conveyor, a jam safety device is provided at each load-unload device, so the load-unload device, the tray, and the package will not be damaged if the package fails to translate out of the conveyor and is caught between an inclined load-unload device and a downward moving tray. The conveyor is capable of operation in the **UP** direction to release the load.

572-2.4.3.1.13 Each intermediate and bottom load station is provided with a jam limit safety device. The device is located in the conveyor trunk at the top of the trunk door opening and in line with the vertical face of the conveyor trunk package guard. The jam limit device for the package conveyor consists of a hinged bracket or a guided tension cable, and for the pallet conveyor is a photoelectric eye. The jam limit device intercepts a tray load which projects beyond tray edge and trips conveyor circuit, stopping conveyor before package or conveyor parts are damaged. The jam limit device, when the jam is cleared, resets to provide conveyor protection and to permit operation of conveyor.

572-2.4.3.1.14 The conveyor has an overtravel limit device installed at the top and bottom load stations. The overtravel limit device interlocks with the control circuit to stop the conveyor if the load on a moving tray is carried past the top or bottom load station. The control circuitry permits conveyor operation in the direction required to release a package jam.

572-2.4.3.1.15 A door block device is provided at each package conveyor load station equipped with a load-unload device so that the trunk door will not close unless the load-unload device is in the stowed position.

572-2.4.3.1.16 The drive unit of the conveyor is equipped with an electronic overload device which monitors the motor output power with meter readout and opens the motor circuit in the event of conveyor overload. The device is in addition to the motor thermal overload relay.

572-2.4.3.1.17 A 5-by 9-inch warning plate is installed adjacent to each trunk door within operator visibility during conveyor operation. The warning plate reads: **WARNING. KEEP CLEAR OF TRUNK OPENING DURING CONVEYOR OPERATION** .

572-2.4.3.1.18 Two-way communication shall be continuously maintained between operating levels to prevent injury to personnel or damage to equipment. The conveyor trunk shall not be used as a means of communication.

572-2.4.3.2 Horizontal Conveyors. Horizontal conveyors are similar to vertical conveyors except that belts or driven rollers are used in place of chains and trays to support the loads. Powered conveyors can bridge a span and operate at an inclined slope. Two types of horizontal conveyors are illustrated in Figure 572-2-18 and Figure 572-2-19.

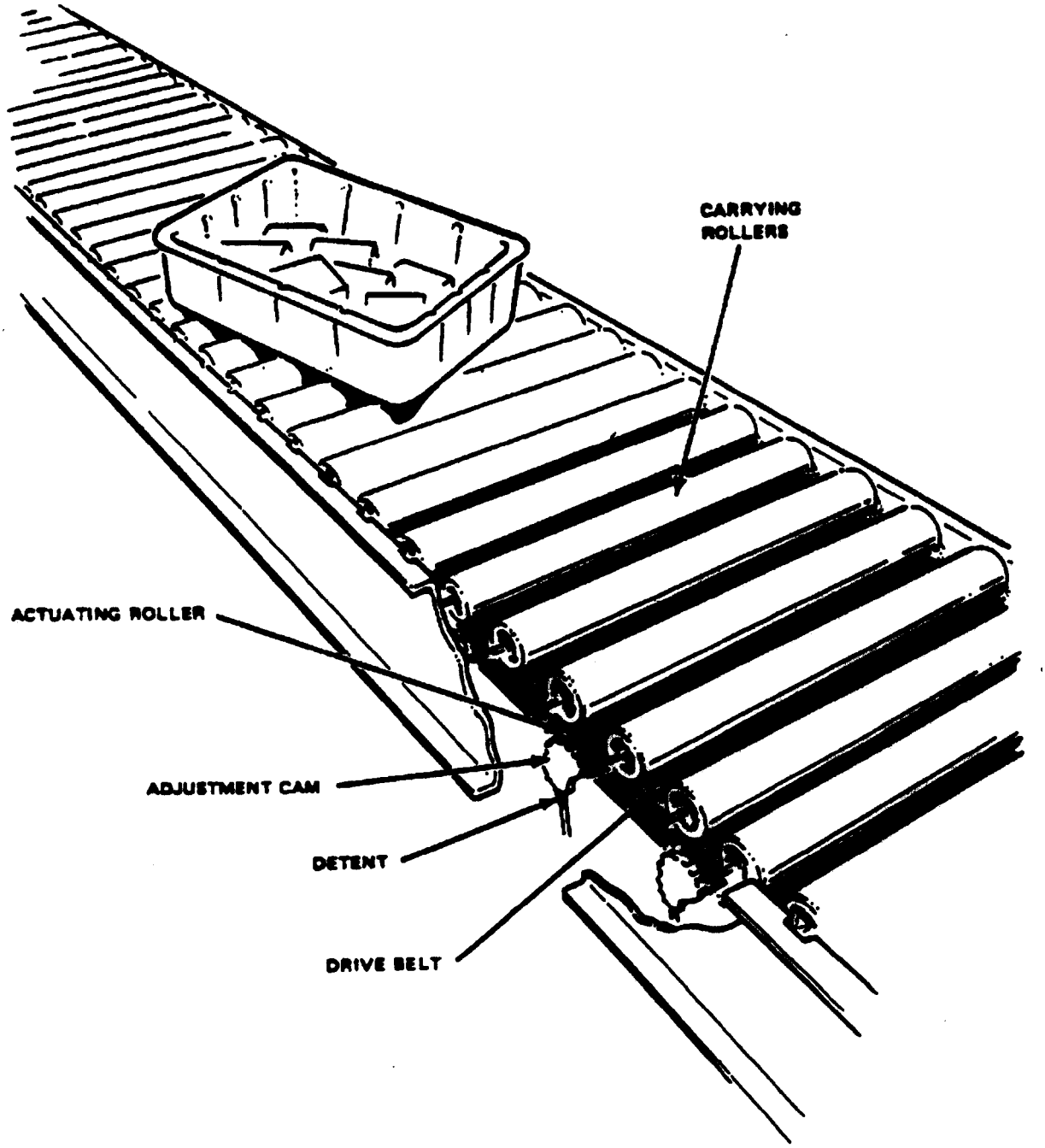


Figure 572-2-18 Powered Roller Conveyor

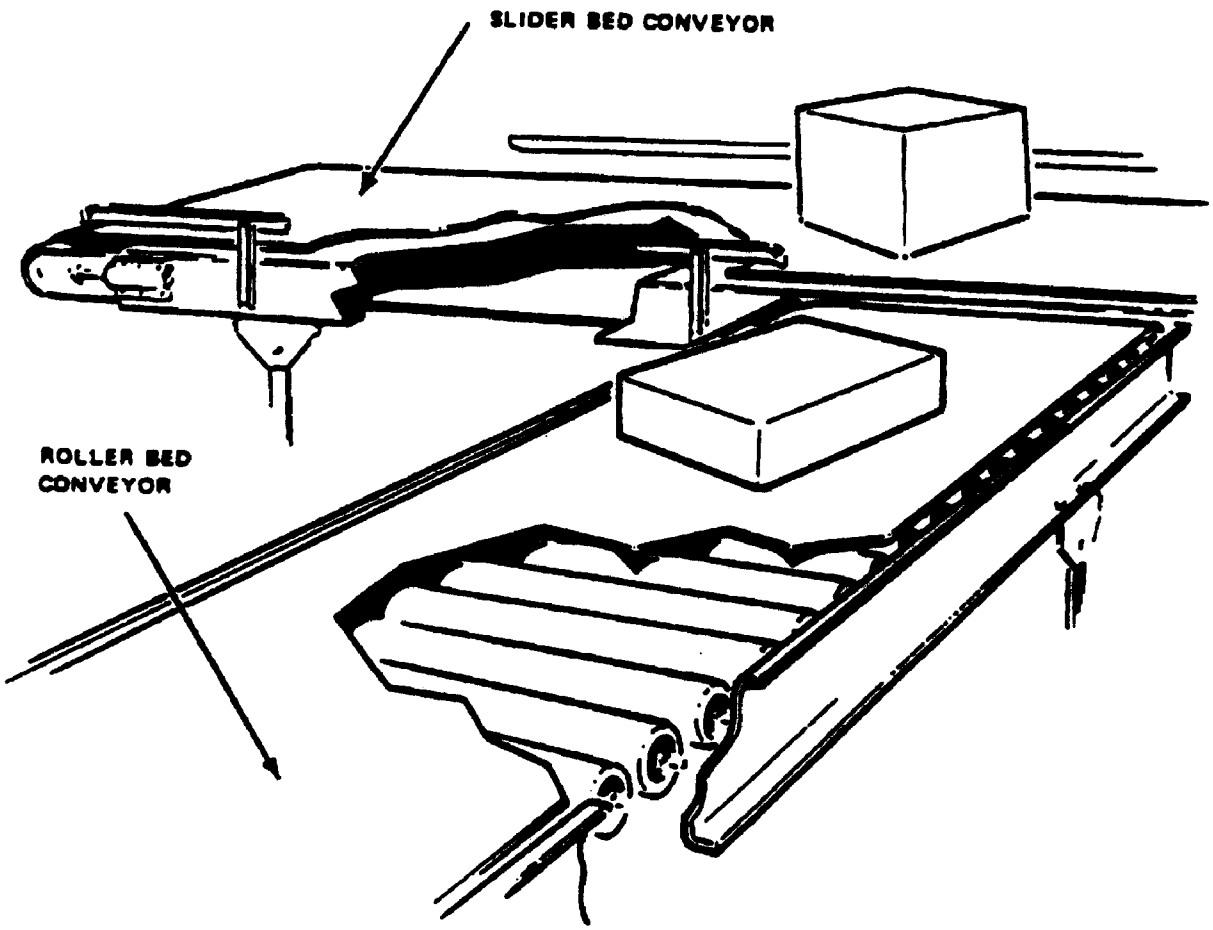


Figure 572-2-19 Powered Belt Conveyor

572-2.4.3.3 Care and Operation of Conveyors

**WARNING**

**Do not place head, arms or other parts of the body into the conveyor trunk during conveyor operation.**

572-2.4.3.3.1 To ensure accident free conveyor operation, the following procedures shall be used:

1. Inspect all interlocks and safety devices to ensure that they are operational before further conveyor operations.
2. Verify that all warning plates are in place.
3. Establish positive communication between all operating control stations using sound powered telephones or intercom system.
4. Do not use conveyor trunk as a voice tube.

5. Utilize the two-man rule while operating the conveyor. See Table 572-2-1 for Two-Man Rule responsibilities and functions.

572-2.4.3.3.2 For safe and effective operation of conveyors, user personnel should be guided by the following general rules and procedures:

1. Examine all conveyors before and during each use for evidence of sharp edges, damage to shields (protruding edges) or other changes which may cause injury to personnel or damage to packaged or palletized stores.

2. Examine power conveyors before each use for loosened or damaged parts.

3. Keep conveyors properly lubricated at all times. Inspect the rollers and lubricate them as necessary to ensure that they turn freely.

4. After painting, examine the movable parts of conveyors, such as switches or rollers, to ensure freedom of movement is maintained.

5. Investigate cause of unusual or excessive vibration during operation and correct to prevent damage or excessive wear.

6. Inspect electrical controls for loose parts, binding, free operation of relays, and worn or burned contacts.

7. Keep trays used for loading and unloading conveyors in place at all times if there is no interference with access to or watertightness of compartments. Place trays in their designated storage if they cannot be kept in place.

8. Keep portable gravity conveyors at working position, if practical, or properly stowed to prevent damage.

9. Before each use, examine conveyor belts for tightness; make necessary adjustments to keep them tight. Belt dressing should be added as necessary to ensure that belts grip driving drums. Examine the joints in the belts periodically.

10. Refer to appropriate equipment technical manual for correct operation of relays, and repair of worn or burned contacts.

11. When requests are submitted for new or replacement conveyors (or repair parts for those in service), care shall be taken to give all information available such as manufacturer, load capacity, catalog number, and part number in catalog, cams, and for weakness of springs. Check the condition of brake drums and linings and look for evidence of overheating. Where installed, inspect and adjust airflow valves as necessary. Inspect motors for corrosion, contamination, and proper operation.

**Table 572-2-1** TWO-MAN RULE FOR VERTICAL PACKAGE CONVEYORS

| **TEAM MEMBER** | **RESPONSIBILITIES Will:** | **FUNCTIONS Will:** | **PROHIBITED FUNCTIONS Will Not:** |
|---|---|---|---|
| 1. SUPERVISOR | 1. Coordinate safe handling of packages on the level being served.<br>2. Coordinate movement of packages between the levels being served.<br>3. Operate the conveyor.<br>4. Explain safe handling procedures to Safety Observer and Handler(s). | 1. Start the conveyor.<br>2. Stop the conveyor under normal and/or unsafe (emergency) conditions.<br>3. Assign specific functions and explain safe handling procedures to each Safety Observer and Handler(s) at the level being served.<br>4. Maintain communication through the existing communications systems with the Supervisor on the level being served to coordinate movement of packages.<br>5. Act as a Handler for a strikeup or strikedown cycle of less than 10 packages. | 1. Act as the Safety Observer or perform the functions of the Safety Observer.<br>2. Perform other functions that detract from his role as Supervisor<br>3. Act as a Handler for a strikeup or strikedown cycle of 10 or more packages.<br>4. Use the conveyor trunk as a communications voice tube. |
| 2. SAFETY OBSERVER | 1. Observe all handling functions at the level being served.<br>2. React to any unsafe operating condition at the level being served by stopping the conveyor.<br>3. Be responsible for the safety of all personnel at the level being served.<br>4. Not allow unsafe operating conditions to exist.<br>5. Know the role of all SVPC personnel at the level being served. | 1. Stop the conveyor if any unsafe or emergency operating condition occurs or exists at the level being served. | 1. Start the conveyor.<br>2. Stop the conveyor under normal operating conditions<br>3. Act as the Supervisor or perform the functions of a Supervisor.<br>4. Act as the Handler or perform the functions of a Handler.<br>5. Perform other functions that detract from his role as Safety Observer.<br>6. Use the conveyor trunk as a communication voice tube. |

**Table 572-2-1** TWO-MAN RULE FOR VERTICAL PACKAGE

CONVEYORS - Continued

| TEAM MEMBER | RESPONSIBILITIES Will: | FUNCTIONS Will: | PROHIBITED FUNCTIONS Will Not: |
|---|---|---|---|
| 3. HANDLER(S) | 1. Load or unload packages in a safe manner from the conveyor during a strikeup or strikedown cycle. | 1. Load packages onto the conveyors at the level being served.<br>2. Unload packages from the conveyor at the level being served.<br>3. Use gravity conveyors during strike cycles to the greatest extent possible.<br>4. Stop the conveyor if any unsafe or emergency operating condition occurs or exists. | 1. Start the conveyor.<br>2. Stop the conveyor under normal operating conditions.<br>3. Act as the Supervisor or perform the functions of a Supervisor.<br>4. Act as a Safety Observer.<br>5. Perform other functions that detract from the role as a Handler.<br>6. Maintain communication between the levels being served.<br>7. Use the conveyor trunk as a communications voice tube. |

## SECTION 3.

## PERIODIC INSPECTION AND TEST

### 572-3.1 GENERAL

572-3.1.1 Stores-handling equipment shall be maintained, inspected, and tested in accordance with the PMS as applicable to each specific equipment. Technical guidance in this chapter should be used if PMS documents are not available for a specific equipment.

572-3.1.2 Personnel performing maintenance, inspections, and tests should be familiar with the equipment and its function. Any required repairs and adjustments of equipment shall be made before inspection and testing. Repairs or adjustments found necessary during any phase of inspection or testing shall be completed and the previous inspection and testing shall be repeated before the next phase of testing. Stores-handling equipment that has been repaired or modified shall be retested before use.

572-3.1.3 Safety precautions shall be observed during tests to prevent personnel injury or damage to adjacent equipment in the event of failure. Wherever practical, portable equipment should be tested at a remote site where the test will not interfere with other ship work. If equipment must be inspected and tested where installed, safety lines and protective barriers shall be used, and watches posted to warn of danger during tests.

### 572-3.2 INSPECTION

572-3.2.1 GENERAL. Stores-handling equipment shall be inspected before each use and thoroughly inspected annually. Inspection shall consist of observing the condition and functioning of all components and parts before, during, and after operation. Annual detailed inspections defined in this section are not intended to replace daily, before-use, or other routine inspections presently required. If annual inspections coincide with scheduled required maintenance actions or yard overhaul inspections, all inspections should be performed concurrently.

572-3.2.2 TYPES OF INSPECTION. Inspection shall be by one or all of the following: sight, sound, touch, measurement, and instrumentation. The purpose of the inspection is to ensure that the equipment is functioning properly in all operating modes, that obvious deficiencies are corrected, and that all critical adjustments are made to ensure safety and reliability.

572-3.2.3 DISASSEMBLY FOR INSPECTION. Removal of inspection and protective covers to gain access to components for inspection and adjustment is considered necessary. The need for further disassembly (for detailed inspection beyond that specifically required in this section) shall be determined by the head of the inspection team, as needed, to assist in problem diagnosis.

572-3.2.4 INSPECTION OF COMPONENTS. The detailed information in this equipment and shall be used as applicable to a specific equipment being inspected. Component inspection shall be performed before operational testing begins.

572-3.2.4.1 Magnetic Brake Systems. Inspect magnetic brake systems for binding or excessive wear in linkage, pins, cams, springs, bearings, and brake linings. Refer to applicable equipment manual for brake lining replacement criteria. Examine brake systems for evidence of scored brake surfaces, exposure of rivet heads (through brake lining), lack of full contact of brake lining, or unequal (tapered) wear of brake lining. Check coils and leads for proper electrical connections, voltages, and coil resistances. Check and set magnet air gaps and adjust operating linkages in accordance with applicable technical manuals.

572-3.2.4.2 Drive Shafts, Couplings, and Open Gears. Inspect shafting for evidence of damage, warpage, or misalignment. Inspect gears for evidence of chipping, lack of full tooth contact, excessive tooth wear, and for looseness on shaft. Inspect installed couplings for looseness, binding due to misalignment, improperly installed bolts and keys, and for lubrication. Inspect bearings for looseness, proper lubrication, and discoloration caused by excessive operating temperature.

572-3.2.4.3 Enclosed Reduction Gears. Inspect enclosed reduction gears and shafting for evidence of chipping, lack of full tooth contact, excessive tooth wear, and for looseness on shaft. Inspect bearings for looseness and discoloration caused by excessive operating temperature. Inspect gear case gaskets, seals, and vents for evidence of leakage. Check gear case for proper lubrication level.

572-3.2.4.4 Wire Rope Sheaves. Inspect wire rope sheaves for worn or damaged sheaves. Inspect for loose bearings and pins, lubrication, and damaged or missing lubrication fittings. Measure sheave grooves for wear using radius gages.

572-3.2.4.5 Wire Rope. Where practical, inspect the wire rope with all of the wire rope payed out. Remove wire rope lubricant with solvent from the running lengths which are exposed to maximum wear and exposure. Relubricate after inspection. Wire rope that has been immersed in seawater must be flushed with freshwater and cleaned with a suitable solvent prior to inspection. Refer to **NSTM Chapter 613, Wire, Fiber Rope, and Rigging** , for definition of wire rope lay length, strand lay length, proper method for measuring wire rope diameter, and general handling and inspection procedures.

572-3.2.4.5.1 Inspect wire rope for corrosion, wear, broken wires, and physical damage to rope structure. Examine, in particular, wire rope sections in contact with equalizer sheaves and saddles and areas where corrosion may develop because of poor drainage. Measure wire rope diameter at six or more places with vernier calipers. Compute the average diameter. Count the number of broken wires in each rope lay length and each strand lay length.

572-3.2.4.5.2 Replace wire rope when one or more of the following conditions exist:

a. Evidence of heat damage from any cause.

b. Evidence of pitting due to corrosion.

c. Six broken wires in one rope lay length or three broken wires in one strand lay length.

d. Kinking, crushing, birdcaging, or any physical damage resulting in distortion of the wire rope structure.

e. One broken wire within one rope lay length of any end fitting; an alternate to replacement of entire rope is to cut off damaged rope section and replace fitting.

f. Wear of an outer wire resulting in diameter reduction of 1/3 or more from the original diameter. Care should be used in applying these criteria to flattened-strand construction wire rope.

g. Reject wire rope if reductions from nominal diameters are of more than 1/64-inch for rope diameters to and including 5/16-inch; 1/32-inch for rope diameters 3/8-inch to and including 1/2-inch; and 3/64-inch for rope diameters 9/16-inch to and including 3/4-inch.

572-3.2.4.6 Wire Rope Fittings and Eye Splices. Inspect wire rope end fittings, sockets, Fiege type fittings, swaged end connections, and Nicopress swaged collars for indication of cable slippage, wear, deformation, and damage. Inspect eye splices for kinks, wear, broken strands and wires, flattening, and slipped splices.

572-3.2.4.7 Hoisting Blocks and Hooks. Inspect hoisting blocks for binding sheave(s), damaged or worn sheaves, worn sheave pin, broken bolts, and worn cheek plates. Inspect hooks for distortion and cracks. Inspect for damage and wear to hook throat mousing device, hook swivel trunnions, bearings, and securing nuts. Inspect for broken or missing lubrication fittings, and lubrication.

572-3.2.4.8 Wire Rope Drums. Inspect wire rope drums for distortion, cracked welds, worn grooves, and lubrication. Inspect drum bearings for wear, lubrication, and discoloration due to excessive operating temperature. With rope payed out to the limit for normal operation, ensure that a minimum of 2-1/2 turns remain on the drum.

572-3.2.4.9 Machinery Foundations. Inspect machinery foundations for distortion, cracked welds, misalinement, and corrosion. Inspect bolted connections for proper contact of mating surfaces. Check bolted connections for missing or defective components and compliance with design specifications. Inspect each fastener for proper bearing surfaces and tightness. Replace all defective fasteners; inspect all remaining fasteners in the group, one at a time, if one fastener is found defective. All replacement fasteners shall be the type specified by the equipment manufacturer for the initial installation. Where fastener material is not specifically identified, replacements shall be equal to the strength requirements of MIL-S-1222, Grade 8 (SAE Grade 8).

572-3.2.4.10 Structure, Structural Members, and Strongbacks. Inspect complete structure for broken or damaged parts and cracked, corroded, or missing members. Inspect for indications of loose fasteners, rivets, and mounting brackets for corrosion, damage, and lubrication. Check bolts, welds, and corrosion. Inspect support pins, bushings, retainers, stowage fittings for damage and proper alinement.

572-3.2.4.11 Handrails, Ladders, Walkways, and Personnel Safety Guides. Inspect handrails, ladders, walkways, and personnel safety guides for excessive wear of rungs and steps and for loose connections, damaged ladder rails, loose mounting connections to structure, cracked welds, loose or missing rivets, and bent or deformed members.

572-3.2.4.12 Positive Limit Stops. Inspect positive limit stops for broken, damaged, worn, or missing parts. Where applicable, inspect hydraulic dampers for seal leakage.

572-3.2.4.13 Electrical Components. Electric motors, controllers, power panels, disconnect switches, reactors, resistor assemblies, and control and limit switches shall be inspected and maintained in accordance with **NSTM Chapter 300, Electric Plant-General** .

572-3.2.4.14 Warning Devices. Inspect warning devices for proper operation of warning lights, bells, and horns. Check switches and inspect wiring and connections.

572-3.2.4.15 Emergency Stop Switches. Inspect emergency stop switches for damaged wiring, proper electrical connections, and switch operation.

572-3.2.4.16 Operating and Cutout Limit Switches. After completion of the emergency stop switch check, set and check all operating and cutout limit switches by operating the equipment at slow speed and actuating all switches. Where backup switches are installed, test-operate such switches, bypassing normal limit switches if necessary.

572-3.2.4.17 Bridge Crane Support Rails. Check to ensure bridge crane support rails are alined and parallel. Inspect for bent or damaged members, loose or missing fasteners, excessive wear of rack-and-pinion gears, and roller chain and sprocket(s); check alinement of the bridge and hoist drive and inspect for cracked welds. Check condition of end stops. Check drives (chain and gear) for proper lubrication.

572-3.2.4.18 Crossover Rails. Check crossover rail weldment and supports for alinement and loose or missing fasteners. Check for binding action in track switching, damage to interlock component, air cylinder leakage, and proper thrust cap travel. Adjust interlocks as required.

572-3.2.4.19 Trolleys. Inspect trolleys for bent or damaged members, missing components, cracked welds, and loose or missing fasteners. Inspect track clamps for proper operation, engagement, wear, and damage. Inspect wheels for wear, flat spots, chips, cracks, flange wear, loose axle pins, and defective securing devices. Check bearings for evidence of looseness, overheating, lubrication, clearances, and properly installed bearing caps or covers.

572-3.2.4.20 Manual Drive Assembly. Inspect manual drive assembly for damaged components and support brackets, covers, and loose or missing fasteners. Inspect chains, gears, handwheels, and bearings for damage, wear, and lubrication.

572-3.2.4.21 Load Block and Clevis or Hook. Inspect load block and clevis for damage or wear to clevis and pins. Inspect block for wear to sheaves and cheek plates, and for loose pins, bolts, and guards. Inspect hook for distortion, cracks, loose swivel bearings and nuts, and for safety latch damage. Ensure that safety latch is not missing.

572-3.2.4.22 Load Chain. The full length of the load link chain and roller chain shall be inspected. Each link shall be checked for cracks. The links should rotate and slip with respect to one another. Any chain in which the links bind on one another is unsafe. Any chain which appears to be unsafe shall be removed from service and replaced. Figure 572-3-1 illustrates criteria for inspecting load link chain.

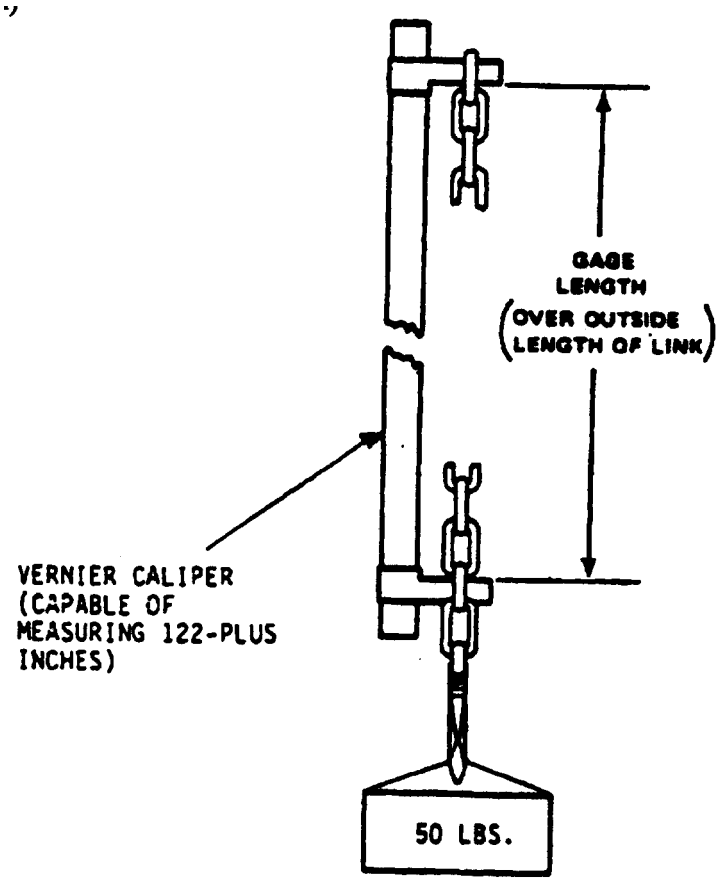


Figure 572-3-1 Inspection of Load Link Chain

572-3.2.4.22.1 Coil link chain shall be removed from service when its bar diameter is below nominal size, as indicated in Table 572-3-1, or when the chain pitch elongation exceeds 3 percent, as determined by comparison measurement of gaged chain length(s), of new link chain, and the inspected hoist chain. Gaging of chain length(s), for comparison of chain pitch, should be made using only new chain supplied by the same manufacturer as the old chain. Chain links of the same bar diameter can vary in length, width, and configuration among manufacturers. (Gaged length(s) should be not less than 12 inches).

572-3.2.4.22.2 Specifications for coil link chains are given in Table 572-3-1. The formula for determining the elongation of chain pitch is:

F = measured load for gaged link chain (see Table 572-3-1)

L = gaged length (new chain)

L’ = gaged length (inspected chain)

P = chain pitch (new chain)

P’ = chain pitch (inspected chain)

N = number of links in gaged length

E = percent elongation of chain pitch (P’)

P = L/N’; P’-L/N

$E = [(P'-P)/P] \times 100$

**Table 572-3-1** SPECIFICATIONS FOR COIL LINK CHAIN

| Nominal Size Bar Diameter (inch) | Replace Link When Bar Diameter is Equal to or Less Than (inch) | Measured Load for Gaged Chain (pound) |
|---|---|---|
| 7/32 (0.218) | 0.196 | 65 |
| 1/4 (0.250) | 0.225 | 85 |
| 9/32 (0.281) | 0.253 | 110 |
| 5/16 (0.312) | 0.281 | 135 |
| 3/8 (0.375) | 0.337 | 165 |
| 7/16 (0.437) | 0.393 | 200 |

572-3.2.4.22.3 Inspect the roller chain during hoisting and lowering and observe operation of the chain and sprockets. The chain should feed smoothly into and away from the sprockets. If the chain binds, jumps, or is noisy, inspect the chain to see that it is clean and properly lubricated. The full length of roller chain shall be inspected. Any one of the following conditions is cause for replacement:

a. Chain pitch elongation exceeds 3 percent as determined by the measurement of gaged chain length(s), and comparison with chain pitch shown in Table 572-3-1.

b. Exceptionally loose joints

c. Pins turned from their original position

d. Joints that cannot be flexed by light hand pressure

e. Worn or broken rollers; rollers that do not turn freely with light finger pressure

f. Bent, cracked, or deformed side plates, especially at the roller pin joints

g. Pitting or discoloration of chain

h. Kinks or twist in any portion over the entire length of chain.

572-3.2.4.22.4 If chain appears to be twisted, remove it from the hoist and coil the chain on a flat surface. Any portion which does not lie flat is twisted in that area. If the chain is twisted the complete hoist chain shall be replaced. Table 572-3-2 gives specifications for roller chain.

572-3.2.4.23 Air Supply System. Check air hose carrier or hose track suspension for damage, wear, and proper operation. Inspect piping, hoses, fittings, valves, and lubricators for damage. Check pendant controls for leakage, loose connections, and operation. Check for excessive water; drain moisture separators if necessary. Check air supply for proper pressure; reset pressure regulators in accordance with applicable technical manuals.

**Table 572-3-2** SPECIFICATIONS FOR ROLLER CHAIN

| Chain Number | Chain Pitch (inch) | New Chain Pitch Tolerance (inch$_+$ ) | Measured Load for Gaged Chain (pound) | Replace Chain When Pitch Exceeds (inches) |
|---|---|---|---|---|
| 25 | 0.250 | 0.001 | 18 | 0.258 |

**Table 572-3-2** SPECIFICATIONS FOR ROLLER CHAIN - Continued

| Chain Number | Chain Pitch (inch) | New Chain Pitch Tolerance (inch$_+$ ) | Measured Load for Gaged Chain (pound) | Replace Chain When Pitch Exceeds (inches) |
|---|---|---|---|---|
| 35 | 0.375 | 0.001 | 18 | 0.387 |
| 40 | 0.500 | 0.001 | 31 | 0.516 |
| 50 | 0.625 | 0.001 | 49 | 0.644 |
| 60 | 0.750 | 0.001 | 70 | 0.733 |
| 80 | 1.000 | 0.0015 | 125 | 1.031 |
| 100 | 1.250 | 0.0015 | 195 | 1.289 |
| 120 | 1.500 | 0.002 | 281 | 1.547 |
| 140 | 1.750 | 0.002 | 383 | 1.804 |
| 160 | 2.000 | 0.0025 | 500 | 2.062 |
| 180 | 2.250 | 0.003 | 633 | 2.360 |
| 200 | 2.200 | 0.003 | 781 | 2.578 |
| 240 | 3.000 | 0.004 | 1000 | 3.094 |

572-3.2.4.24 Pneumatic Motors and Brakes. Inspect pneumatic motors and brakes for damaged, loose, or missing fasteners and support brackets. Inspect for wear in linkage, pins, and cams, and for weakness of springs. Check the condition of brake drums and linings and look for evidence of overheating. Where installed, inspect and adjust airflow valves as necessary. Inspect motors for corrosion, contamination, and proper operation.

572-3.2.5 SHACKLES. New shackles must conform to Federal Specification RR-C-271. In-service shackles must be inspected/replaced as follows. Loose shackles that are routinely disassembled should be inspected prior to every use. Shackles that are installed in a system and that are not routinely disassembled should be inspected upon initial application and thereafter in accordance with system inspection requirements. Shackles shall be visually inspected for manufacturer's marking (i.e., raised or stamped letters with the identifying manufacturer's name or trademark, size, and Working Load Limit). Also check for cracks, corrosion, distortion (bending, spreading, or twisting), and peening/wear (including nicks or gouges). Most likely problem areas are the top center of the shackle body, the places where the pin and body come together, and the pin at the center of its grip. See Figure 572-3-2. If peening/wear are suspect, conduct dimensional checks to determine whether the shackle must be removed from service. Minor defects (cracks, nicks or gouges) may be removed by grinding longitudinally, following the contour of the shackle, provided that the wear limits are not exceeded. Shackles shall be removed from service if any of the following defects are found (or remain after grinding):

a. Lack of marking.

b. Any crack.

c. Significant corrosion (i.e., sufficient to leave ″orange peel″ texture when removed).

d. Distortion sufficient to make assembly/disassembly difficult without using tools.

e. Peening or wear (including a nick or gouge) that results in minimum dimensions less than those shown in Table 572-3-3 (most likely at the top center of the body and at the center of the pin). The remove-from-service limits in this table represent 10 percent reduction of body diameter and 5 percent reduction of pin diameter.

**Table 572-3-3** SHACKLE REPLACEMENT CRITERIA

| Diameter Body (inches) | Nominal Diameter (inches) | | Remove from Service When Diameter Equals (inches) | |
|---|---|---|---|---|
| | **Body** | **Pin** | **Body** | **Pin** |
| 3/16 | 0.188 | 0.250 | 0.169 | 0.238 |
| 1/4 | 0.250 | 0.313 | 0.225 | 0.297 |
| 5/16 | 0.313 | 0.375 | 0.282 | 0.356 |
| 3/8 | 0.375 | 0.438 | 0.338 | 0.416 |
| 7/16 | 0.438 | 0.500 | 0.394 | 0.475 |
| 1/2 | 0.500 | 0.625 | 0.450 | 0.594 |
| 9/16 | 0.563 | 0.625 | 0.507 | 0.594 |
| 5/8 | 0.625 | 0.750 | 0.563 | 0.713 |
| 3/4 | 0.750 | 0.875 | 0.675 | 0.831 |
| 7/8 | 0.875 | 1.000 | 0.788 | 0.950 |
| 1 | 1.000 | 1.125 | 0.900 | 1.069 |
| 1-1/8 | 1.125 | 1.250 | 1.013 | 1.188 |
| 1-1/4 | 1.250 | 1.375 | 1.125 | 1.306 |
| 1-3/8 | 1.375 | 1.500 | 1.238 | 1.425 |
| 1-1/2 | 1.500 | 1.625 | 1.350 | 1.544 |
| 1-5/8 | 1.625 | 1.750 | 1.463 | 1.663 |
| 1-3/4 | 1.750 | 2.000 | 1.575 | 1.900 |
| 2 | 2.000 | 2.250 | 1.800 | 2.138 |
| 2-1/4 | 2.250 | 2.500 | 2.025 | 2.375 |
| 2-1/2 | 2.500 | 2.750 | 2.250 | 2.613 |
| 2-3/4 | 2.750 | 3.000 | 2.475 | 2.850 |
| 3 | 3.000 | 3.250 | 2.700 | 3.088 |
| 3-1/2 | 3.500 | 3.750 | 3.150 | 3.563 |
| 4 | 4.000 | 4.250 | 3.600 | 4.038 |

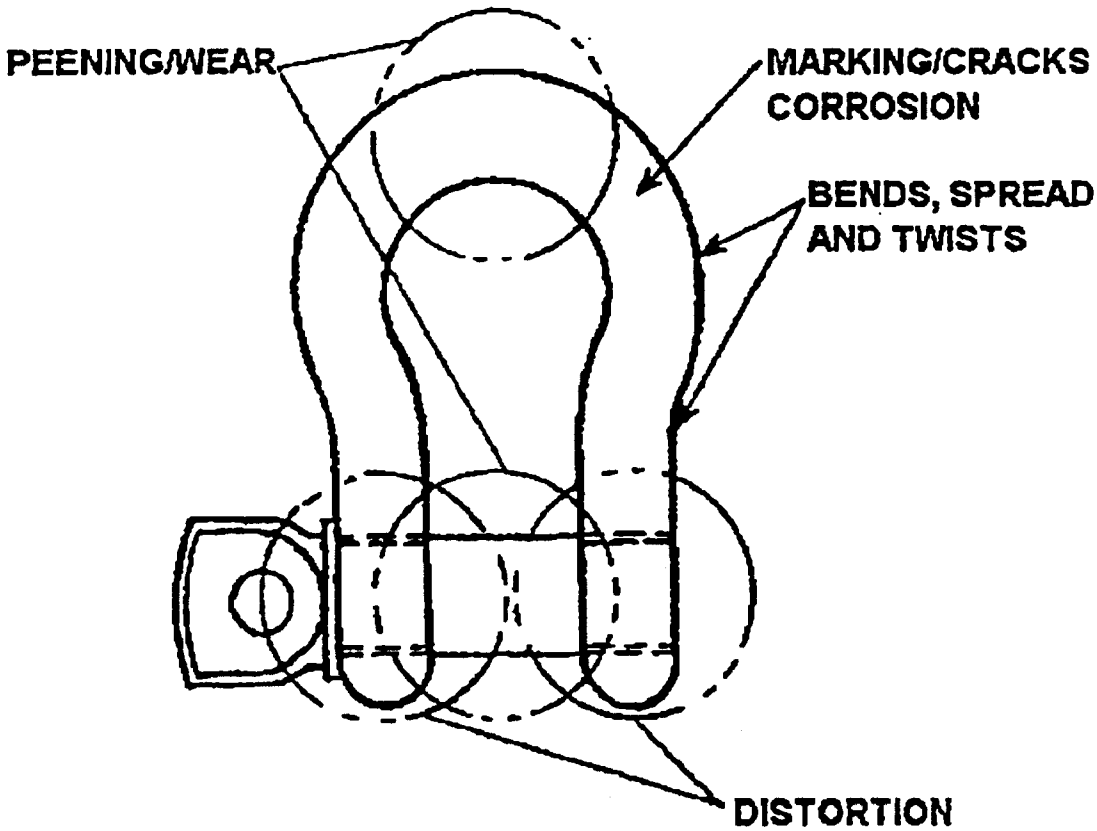


Figure 572-3-2 Shackle Inspection Areas

**572-3.3 TESTING**

572-3.3.1 NO-LOAD TEST. No-load tests shall be conducted annually on all stores- and provision-handling equipment following satisfactory completion of the inspections defined in paragraphs 572-3.2 through 572-3.2.5. No-load tests are conducted to determine if the equipment operates correctly and safely in all functional modes. Reference to the equipment specification and the technical manual will aid in defining the scope and procedure for this test. While undergoing the no-load test, the equipment shall be required to function through full operating ranges and directions specified for the equipment. Specifically, the equipment shall:

a. Raise and lower hoist load hook(s), and cycle the conveyor(s) and dumbwaiter(s) through their full range of travel at rated speed for three complete cycles.

b. Operate the hoist trolley through full limits of travel at rated speed for three complete cycles; one cycle will be run in the case of manual drive trolleys.

c. Operate the bridge crane through full limits of bridge girder travel at rated speed for three complete cycles; one cycle will be run in the case of manual bridge drive.

d. Equipment with unusual operating features or modes shall be operated sufficiently to demonstrate proper operation of such features or modes. During the test, all travel-limiting devices such as switches, valves, or mechanical stops shall be operated a sufficient number of times to demonstrate proper operation. All safety devices shall be separately tested and inspected for proper operation. Equipment shall be operated using normal operating and control procedures.

572-3.3.1.1 Guidance for inspection of components during the no-load operating test is:

a. During the last portion of the operating cycle, for each motion, operating limit switches and emergency stop switches shall be operated at slow speed when it is necessary to actuate the limit switches to stop overtravel. Actuate all emergency switches.

b. To test the brake system, check the brake manual release feature and the full brake release when the hoist is energized. Check brake adjustment for lining wear, brake adjustment to brake torque rating, and check the insulation resistance of electrical wiring.

c. To inspect structural and operating components, check for evidence of binding, warping, permanent deformation, cracking, or malfunction of components.

d. To inspect machinery drive components, check for abnormal noise or vibration and overheating.

e. To inspect wire rope sheaves, drum spooling, wire rope fasteners, and terminal hardware, check for proper operation, freedom of movement, unusual noise or vibration, satisfactory operation of sheave guards, and wire rope spooling. Check for minimum of two full wire rope turns on drum for extreme position of lowered or extended hoist cable.

f. To inspect electrical drive components, check for proper operation, chatter, noise, vibration, or overheating.

g. To inspect electrical controls, check for proper operation and response.

h. To inspect the pneumatic drive system, check for evidence of air leakage, loose connections, vibration, proper lubrication, and system response. Check gage air pressure for proper operating pressure.

572-3.3.2 STATIC LOAD TEST. Stores and provision-handling equipment shall be load-tested at every overhaul or, as a minimum, at intervals not exceeding 5 years, and after major repair or replacement of load bearing components or overhaul. Load testing shall be preceded by satisfactory completion of annual inspections and no-load test. Monorail and birail hoist track sections permanently attached to the ship structure do not require periodic load-testing except following initial installation, modification, or major repair.

572-3.3.2.1 The static load test physically tests the structural and mechanical integrity of stores- and provision-handling equipment. Loads may be applied by test weights or mechanical devices with load-measuring gages, depending on test requirements and availability of facilities. The test weights/or value on dynamometer shall be within plus 5 percent and minus 0 percent of the specified weight. Paragraphs 572-3.3.2.2 through 572-3.3.2.7 outline general static load test procedures for use on stores-and provision-handling equipment. The procedures were developed to cover broad applications and may be used as guidance in applying the procedures most suitable to the equipment undergoing test.

572-3.3.2.2 The equipment or installation shall be positioned, as nearly as practical, to provide most critical loading to equipment and support structure. For example, bridge cranes and trolley hoists shall be positioned to impose maximum stress on the bridge or support rail and shall include extreme and midspan positions; a horizontal conveyor(s), uniformly loaded and supported, shall be positioned at the ends of the conveyor frame span.

**NOTE**

Equipment shall not be operated with static test loads.

572-3.3.2.3 Equipment shall be positioned so it will provide maximum protection in case of failure. Hoist test loads shall be suspended over cribbing to distribute load on deck in case of failure. Where practical, loads shall be applied by an auxiliary hoist, using dynamometers or other load-measuring devices in lieu of test weights.

572-3.3.2.4 The static test load shall be equal to 200 percent of the rated load and shall be applied with the ship at pierside or moored in calm seas, unless otherwise specified. If the static test must be conducted while the ship is at sea, the static test load shall be 150 percent of the rated load while the ship is underway in a moderate sea (Beaufort Sea State 3 or less). Equipment being tested shall hold the static test load for a minimum of 10 minutes. Equipment shall be visually examined and inspected, as required, for evidence of permanent deformation, brake slippage, or other damage.

572-3.3.2.5 Static test loads on hoists may be applied by any one of three methods.

572-3.3.2.5.1 Method 1. Test procedures for method 1 are:

1. Put two sets of slings on test load.
2. Using an auxiliary hoist, with rated capacity equal to test load, lift test load about 6 inches clear of support.
3. Slip hook or load fitting of equipment being tested through the second sling and take up slack.
4. Slowly lower test load with auxiliary hoist, stopping lowering at least twice.
5. When slack develops in auxiliary hoist, remove its hook from the sling; suspend the test load for 10 minutes from the hoist or equipment undergoing test.
6. Hook up auxiliary hoist.
7. Raise test load with auxiliary hoist until test load is removed from tested equipment.

572-3.3.2.5.2 Method 2. Test procedures for method 2 are:

1. Attach a partial test load, equal to 150 percent of rated load, to the equipment being tested and lift clear of support. For equipment with an overload limit device, partial test load should not exceed overload limit.
2. By auxiliary means, add remainder of static test load.
3. Additional loads must be added and removed slowly.
4. Lower partial test load back to support.

572-3.3.2.5.3 Method 3. Test procedures for method 3 are:

1. Apply the additional or entire test load by using an auxiliary hoist that has capacity equal to load applied and a load-measuring device or dynamometer.
2. Rig an auxiliary hoist between the padeye or other attachment point and the load-measuring device which is attached to the load fitting of the equipment being tested.
3. Apply and remove test loads gradually.

572-3.3.2.6 During and immediately following static load test make the following inspections and observations:

1. Inspect for evidence of binding, warping, permanent deformation, cracking, or malfunction of components. Inspect for evidence of slippage of sockets and fittings on wire rope.

2. Check brakes for ability to hold load without slippage. Brakes on pneumatic hoists may require adjustment to prevent slippage of under a 200 percent load test. After static test, readjust brakes in accordance with applicable technical manual.

3. Inspect load hooks for wear in swivels and pins, and wear, cracks, or gouges in the hook throat. Replace hooks when material or section loss exceeds 10 percent, when hook throat opening exceeds 5 percent of normal, or when hook is twisted more than 10 degrees from the plane of the unbent hook.

572-3.3.2.7 A base-measured throat dimension shall be established before loading the hook for the static load test. Install two tram points (see Figure 572-3-3); measure and record the distance between tram points. Refer to Table 572-3-4 for nominal hook throat openings for differing hoist capacities. After completing the static load test, measure and record the distance between tram points. Hooks showing an increase in the throat opening by more than 5 percent shall be replaced.

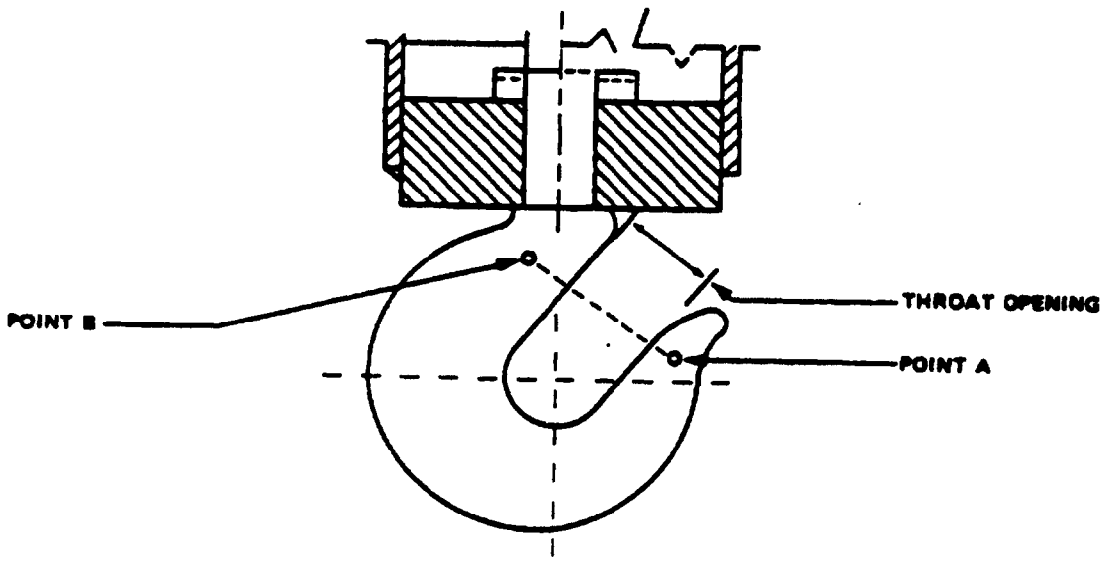


Figure 572-3-3 Load Hook

572-3.3.3 DYNAMIC LOAD TEST. Following completion of the static load test, powered handling equipment described in this chapter shall be subjected to dynamic load tests at every overhaul, or as a minimum at intervals not exceeding 5 years, and after major repair or replacement of load bearing components or overhaul. The dynamic load test is used to test and demonstrate the capability of powered weight-handling equipment to operate with rated loads under the dynamic conditions of ship motion and equipment operation. As in the case of a static load test, general procedures for broad applications are described and are to be applied as suitable to the equipment undergoing test.

**Table 572-3-4** SPECIFICATIONS FOR HOOK THROAT OPENINGS

| Hoist Capacity, Tons (not less than) | Hook Throat Opening[1] (inches)[2] |
|---|---|
| 1/2 | 3/4 |
| 1 | 29/32 |
| 1-1/2 | 1 |
| 2 | 1-1/8 |
| 4 | 1-3/8 |
| 5 | 1-5/8 |
| 7 | 2-1/16 |
| 12-1/2 | 2-1/4 |
| 15 | 2-3/4 |
| 20 | 3 |

[1]Specifications are for hooks with safety latches.

[2]Throat openings not less than inches given.

572-3.3.3.1 A dynamic load test shall be performed to demonstrate handling equipment load capabilities through the complete operating range of the equipment being tested, except that suspended loads shall be kept clear of facilities and equipment located within the test area to prevent damage if equipment failure occurs. Facilities and equipment not involved in test work shall be moved clear of testing area, where practical, to avoid damage if equipment failure occurs.

572-3.3.3.2 Do not exceed the specified operating limits of equipment being tested. Main and auxiliary hook test loads shall not be lifted simultaneously (where existing). A dynamic test load shall be 150 percent of the rated load while the ship is pierside or moored in calm seas, unless otherwise specified. If the dynamic load test must be conducted while the ship is at sea, dynamic test loads shall be 125 percent of rated load while ship is underway in moderate seas (Beaufort Sea State 3 or less). Test loads shall be moved through the complete operating range of the equipment, as far as is practical, using limits of all operating modes: hoisting, rotating, traversing, raising, lowering, and traveling. The equipment with the test load shall be stopped at least three times in each direction to ensure proper operation of brakes. Although no speed is specified, maximum speed attainable by machinery with the required test load is to be used.

572-3.3.3.3 During performance of the dynamic load test, components shall be observed and inspected as defined in paragraphs 572-3.3.1 and 572-3.3.1.1 and the equipment shall be cycled through the test sequence only the number of times needed to evaluate equipment performance.

572-3.3.3.4 When possible, equipment undergoing static, dynamic, and rated load tests should be removed for testing to reduce shipboard risk of damage due to equipment failure.

572-3.3.4 RATED LOAD TEST. Following satisfactory completion of static and dynamic load tests defined in paragraphs 572-3.3.2 through 572-3.3.3.4, powered weight-handling equipment shall be subjected to a rated load test. The rated load test shall be conducted using test loads equal to 100 percent of the rated capacity of the equipment. Where more than one capacity exists for a particular equipment (such as the main and auxiliary hoists on cranes), each such capacity shall be tested separately.

572-3.3.4.1 Rated load tests are used to demonstrate capability of the equipment to operate with a full load at rated speed through the complete range of operating limits. To meet this requirement, test loads shall be moved at rate speed through the complete operating range of the equipment using limits of all operating modes: hoisting, rotating, traversing, raising, lowering, and traveling. The rated load test shall be repeated a sufficient number of cycles to demonstrate proper operation and repeatability of all functions without overheating drive motors, gear boxes, or brakes. Where automatic operating modes exist, equipment shall be operated satisfactorily in automatic mode to each position, stop, or level during the rated load test.

572-3.3.4.2 All interlock and limit switches shall be demonstrated. Where applicable, emergency stop controls shall be actuated with equipment operating at highest rated speed in lowering direction and with rated load to demonstrate adequacy of control and brake. Each operating mode having such emergency features shall be tested individually.

572-3.3.4.3 During rated load tests, equipment and components shall be observed and inspected using guidance provided in paragraphs 572-3.3.1 and 572-3.3.1.1.

## 572-3.4 INSPECTION AND TEST RECORDS

572-3.4.1 Following satisfactory completion of annual inspections and 4-year or regular-overhaul load tests, the equipment shall be tagged or marked to indicate that the tests have been completed. New handling equipment shall be load-tested and marked by the manufacturer as specified in applicable procurement documents. Equipment passing the load tests shall be marked by the facility performing the tests and a record of each test shall be maintained by the testing facility. As a minimum, marking shall include the name of the testing facility, the date tested, and the rated load capacity. The date of the next required inspection may be included if desired. The method of marking shall be appropriate to the particular item, subject to these provisions:

1. Legible marking shall be provided on a label plate, or stenciled in contrasting paint on a conspicuous surface, provided that the surface is not subject to rubbing or dragging that may remove or deface the marking.
2. Color coding for local control only may be used in addition to, but not as an alternate to, one of the marking methods authorized for local control.
3. Subsequent to marking, the following information shall be recorded in a permanent log.
   a. Equipment identification
   b. Date of test or inspection
   c. Description of test or inspection
   d. Weight (pounds) used for test
   e. Testing activity

# REAR SECTION

**NOTE**

TECHNICAL MANUAL DEFICIENCY/EVALUATION EVALUATION REPORT (TMDER) Forms can be found at the bottom of the CD list of books. Click on the TMDER form to display the form.